# SPRINGS

# SPRINGS

## Springs for dies, fixtures, moulds, machines, mechanisms.

We have also taken our strict quality philosophy as a basis for our spring range. This applies both to the selection of materials and to the design. With our wide range of products, we are able to meet complex requirements thanks to various systems. Which system is used depends on the individual factors. Either way, we are sure that we have the right spring for you.

We would like to draw your attention in particular to our special helical compression springs, which we supply in 4 load groups for high alternating loads.
These springs are made of specially alloyed and heat-treated material. The specially rolled profile enables high alternating and continuous loads.

We reserve the right to make changes, as technology is subject to change due to new findings and further developments.

## A special spring range for demanding applications in the manufacture of tools, machinery and jigs & fixtures.

Our spring systems are constantly being developed to cover the most varied requirements.
The spring type is selected to match specific customer requirements.

### High performance compression springs

Manufactured to DIN ISO 10243, the springs are available in four grades for high cyclic and constant loads.
The specially rolled wire profile is manufactured from high quality heat treated alloy steel.

### FIBROFLEX® Springs

These rubber-elastic spring elements in Shore hardness ratings 80, 90, 95, are made from polyurethane elastomers. Benefits include high spring forces and good resilient damping behaviour.

### FIBROELAST® Springs

As a superior alternative to rubber springs we offer polyurethane elastomer springs in Shore A hardness rating of 70.

### Disc springs

The required spring characteristics result from various laminations with multiple settings and combinations.

### FIBRO Gas Springs

close a gap where ever the accent is on accommodation of the utmost force component within a minimum of space – or where exceedingly large travel is demanded: FIBRO Gas springs take care of both demands, even in combination.

# CONTENTS


Springs - complete overview **F21**

High performance compression springs - Description **F24**

High performance compression springs -
Time and spring life diagram **F25**

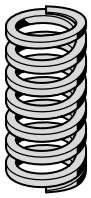

**241.13.** High performance compression spring, XSF, Colour "Violet" **F26-27**

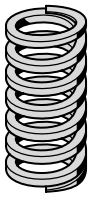

**241.14.** High performance compression spring, SF, Colour "Green", DIN ISO 10243 **F28-29**

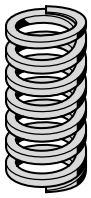

**241.15.** High performance compression spring, MF, Colour "Blue", DIN ISO 10243 **F30-31**

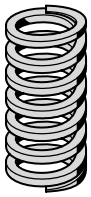

**241.16.** High performance compression spring, LF, Colour "Red", DIN ISO 10243 **F32-33**

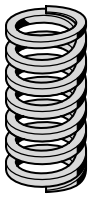

**241.17.** High performance compression spring, XLF, Colour "Yellow", DIN ISO 10243 **F34-35**

**241.19.** High performance compression spring, 3XLF, Colour "White" **F36**

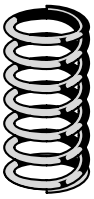

**241.02.** Round wire compression spring **F37**

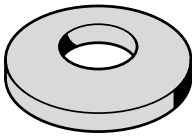

**242.01.** Disc spring DIN 2093 **F38**

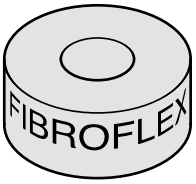


**244.1.** FIBROFLEX®-Elastomer spring for FIBROFLEX®-Spring system **F40-41**

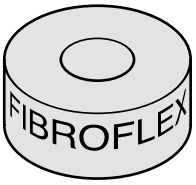


**246.5.** FIBROFLEX®-Tubular spring element 80 Shore A, to DIN ISO 10069-1 **F42-43**

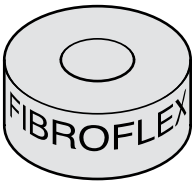


**246.6.** FIBROFLEX®-Tubular spring element 90 Shore A, to DIN ISO 10069-1 **F44-45**

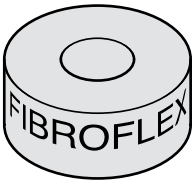


**246.7.** FIBROFLEX®-Tubular spring element 95 Shore A, to DIN ISO 10069-1 **F46-47**

**2461.4.** FIBROELAST® Tubular spring element 70 Shore A **F48-49**

# CONTENTS


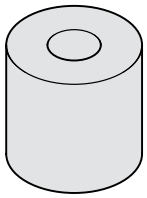

**2461.2.** **F50-51**

Tubular Spring Element, Rubber 70 Shore A

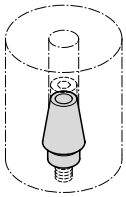

**2441.5.** **F52**

Locating bolt

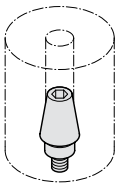

**2441.6.** **F52**

Locating bolt, threaded

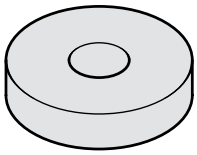

**2441.3.** **F53**

Stacking washer DIN ISO 10069-2

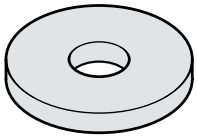

**244.4.** **F53**

Thrust washer

**244.5.** **F54**

Guide pin

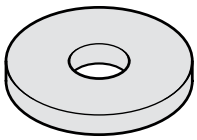

**244.6.** **F54**

Trust washer for elastomer springs

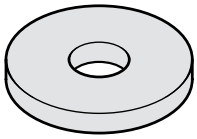

**244.7.** **F55**

Trust washer for compression springs

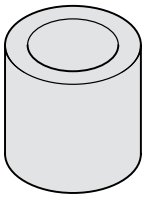

**244.9.** **F56**

Spacer tube

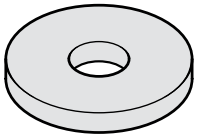

**244.10.15.** **F57**

Washer

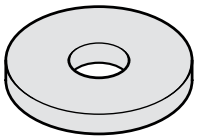

**244.10.** **F58**

Washer

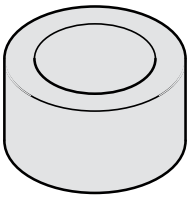

**244.11.** **F58**

Spacer sleeve

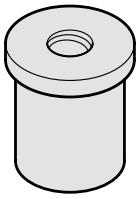

**244.12.** **F59**

Spacer plug

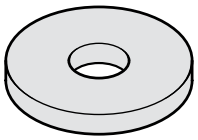

**244.13.** **F59**

Adjusting washer

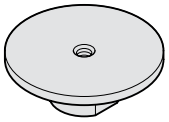

**2441.14.** **F60**

Threaded disc for elastomer springs

**2441.15.** **F60**

Threaded disc for compression springs

# CONTENTS


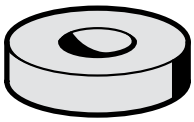

**2450.** **F61**

Shock absorbing washer

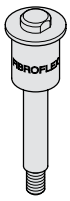

**2441.18.** **F62**

Retaining bolt

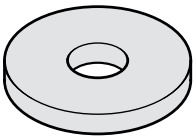

**2441.16.** **F62**

Thrust washer

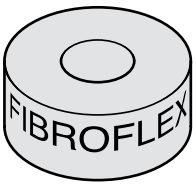


**246.6. .033.** **F63**

FIBROFLEX®-Tubular spring element

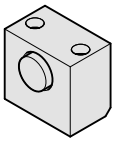

**2451.6.** **F64**

Slide stop

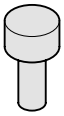

**2451.6. .2** **F65**

Stop buffer

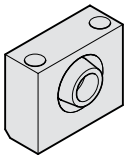

**2452.10.** **F66**

Slide stop

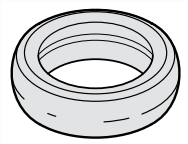

**2450.10A.** **F68**

Damper, light-duty

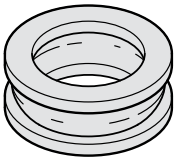

**2450.11B.** **F69**

Damper, light-duty

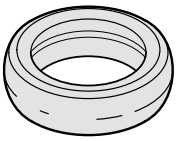

**2450.20_.** **F70-71**

Damper, heavy-duty

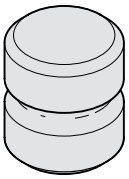

**2451.10D.** **F72**

Damper stopper

**2452.10. .2** **F73**

Damping unit SD

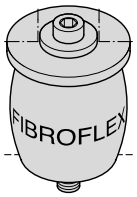


**244.14.0.** **F74**

Spring unit for elastomer spring

**2441.14.1.** **F74**

Spring unit for elastomer spring

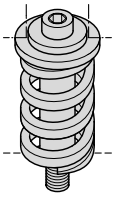

**244.15.0.** **F75**

Spring unit for helical spring

**2441.15.1.** **F75**

Spring unit for helical spring

# CONTENTS


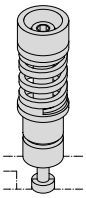

**244.20./25./32./40.** **F76-77**

Spring and spacer unit

**244.20./25./32./40.3.** **F78**

Spring and spacer unit
low installation space

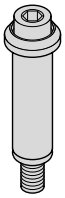

**244.16.** **F80**

Spring and spacer unit

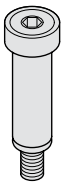

**244.18.** **F81**

Spring and spacer unit, with hexagon socket countersunk head cap screw

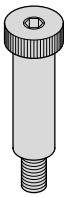

**244.17.** **F82**

Shoulder screw

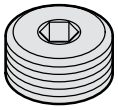

**241.00.1.** **F83**

Pipe plug (for compresssion spring adjustement)

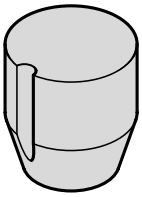

**2471.6.** **F84**

Compression Pad

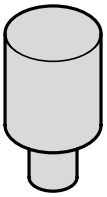

**247.6.** **F84**

Shedder insert

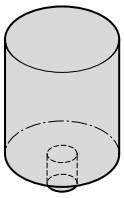

**2531.7.** **F85**

Setting-up bumper, round

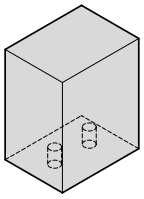

**252.7.** **F86**

Setting-up bumper, square

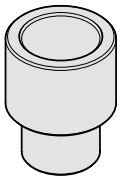

**2533.10.** **F87**

Spacer for die release

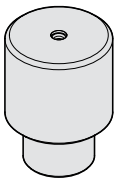

**2533.20.** **F88**

Spacer with spring for die release

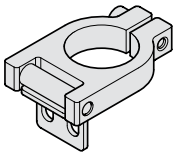

**2533.00.01.** **F89**

Hinge for spacer

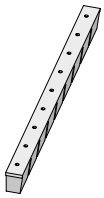

**2532.2.** **F90**

Strippers for blanking dies
to Mercedes-Benz- / VW Standard /
VDI 3362

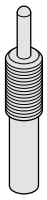

**2470.10. .1** **F92**

Spring plunger, standard spring force, VDI 3004, Colour marking: yellow

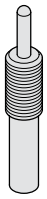

**2470.20. .1** **F93**

Spring plunger, low maintenance, standard spring force, VDI 3004, Colour marking: yellow

# CONTENTS


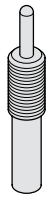

**2470.10. .3** **F94**

Spring plunger, medium spring force, VDI 3004, Colour marking: white

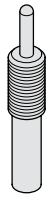

**2470.20. .3** **F95**

Spring plunger, low maintenance, medium spring force, VDI 3004, Colour marking: white

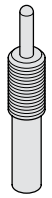

**2470.10. .2** **F96**

Spring plunger, increased spring force, VDI 3004, Colour marking: red

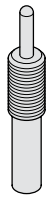

**2470.20. .2** **F97**

Spring plunger, low maintenance, increased spring force, VDI 3004, Colour marking: red

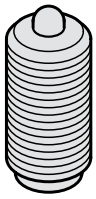

**2471.01.** **F98**

Spring plunger, with spring loaded ball, with slot, standard spring force

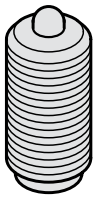

**2471.31.** **F98**

Spring plunger, with spring loaded ball, with slot, standard spring force

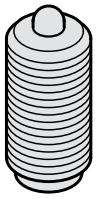

**2471.02.** **F99**

Spring plunger, with spring loaded ball, with slot, increased spring force

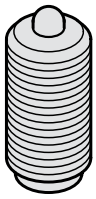

**2471.32.** **F99**

Spring plunger, with spring loaded ball, with slot, increased spring force

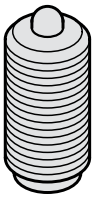

**2471.03.** **F100**

Spring plunger, with spring loaded ball, with hexagon socket, standard spring force

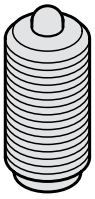

**2471.33.** **F100**

Spring plunger, with spring loaded ball, with hexagon socket, standard spring force

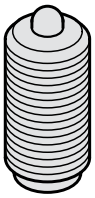

**2471.04.** **F101**

Spring plunger, with spring loaded ball, with hexagon socket, increased spring force

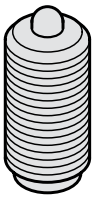

**2471.34.** **F101**

Spring plunger, with spring loaded ball, with slot, standard spring force

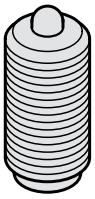

**2471.05.** **F102**

Spring plunger, with spring loaded ball, with slot, standard spring force

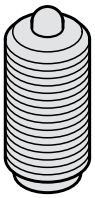

**2471.35.** **F102**

Spring plunger, with spring loaded ball, with slot, standard spring force

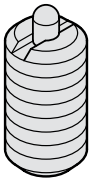

**2472.01.** **F103**

Spring plunger, with spring loaded pin, with slot, standard spring force

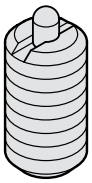

**2472.31.** **F103**

Spring plunger, with spring loaded pin, with slot, standard spring force

# CONTENTS


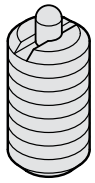

**2472.21.** **F104**

Spring plunger, with spring loaded pin, with slot, standard spring force

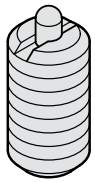

**2472.22.** **F104**

Spring plunger, with spring loaded pin, with slot, standard spring force

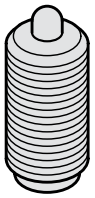

**2472.03.** **F105**

Spring plunger, with spring loaded pin, with hexagon socket, standard spring force

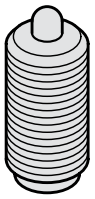

**2472.33.** **F105**

Spring plunger, with spring loaded pin, with hexagon socket, standard spring force

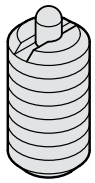

**2472.07.** **F106**

Spring plunger, with spring loaded pin and seal, with hexagon socket, standard spring force

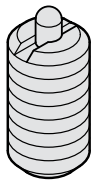

**2472.37.** **F106**

Spring plunger, with spring loaded pin and seal, with hexagon socket, standard spring force

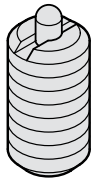

**2472.02.** **F107**

Spring plunger, with spring loaded pin, with slot, increased spring force

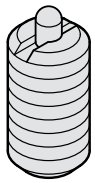

**2472.08.** **F107**

Spring plunger, with spring loaded pin and seal, with hexagon socket, increased spring force

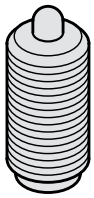

**2472.04.** **F108**

Spring plunger, with spring loaded pin, with hexagon socket, increased spring force

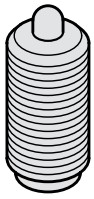

**2472.34.** **F108**

Spring plunger, with spring loaded pin, with hexagon socket, increased spring force

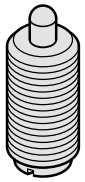

**2472.05.** **F109**

Spring plunger, with spring loaded pin, with slot, standard spring force

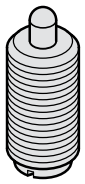

**2472.35.** **F109**

Spring plunger, with spring loaded pin, with slot, standard spring force

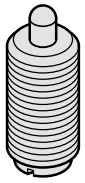

**2472.06.** **F110**

Spring plunger, with spring loaded pin, with slot, increased spring force

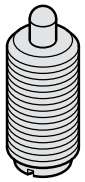

**2472.36.** **F110**

Spring plunger, with spring loaded pin, with slot, increased spring force

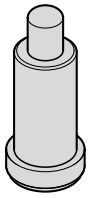

**2473.01.** **F111**

Spring plunger, with spring loaded pin, straight version, with collar

**2473.02.** **F111**

Spring plunger, with spring loaded ball, straight version

# CONTENTS

**2475.01.** **F112**

Spring plunger, with spring loaded ball, straight version, with collar

**2475.02.** **F112**

Spring plunger, with spring loaded ball, straight version, with collar

**2475.03.** **F113**

Spring plunger, with spring loaded ball, straight version, with collar

**2475.04.** **F113**

Spring plunger, with spring loaded ball, straight version, with collar

**2470.10.11** **F114**

Insertion Tool

**2470.12.010.017** **F114**

Insertion Tool

**2472.11.** **F114**

Thrust pad driver

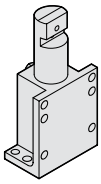

**2477. .1.01** **F116**

Stripping unit, wall and bottom mounting

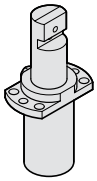

**2477. .1.02** **F117**

Stripping unit, flanged mounting

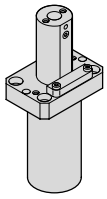

**2478.10.** **F118**

Stock lifter

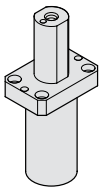

**2478.30. .1** **F119**

Stock lifter

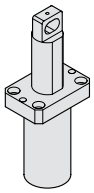

**2478.30. .2** **F120**

Stock lifter with attachment lug

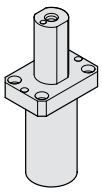

**2478.30. .3** **F121**

Stripper

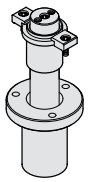

**2478.20.20.** **F123**

Lifting unit (not damped/damped) to Mercedes-Benz

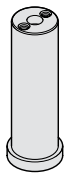

**2478.20.20.1.** **F124**

Guide pillar for lifting unit to Mercedes-Benz

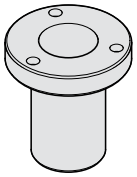

**2478.20.20.2.** **F125**

Sleeve for lifting unit to Mercedes-Benz




subject to alterations

# CONTENTS


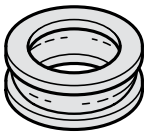

**2478.20.20.3** **F126**

Damper for lifting units to Mercedes-Benz

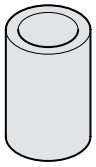

**2478.20.20.4** **F127**

Spacer sleeve for lifting units to Mercedes-Benz

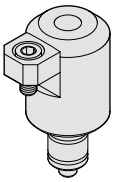

**2478.20.15.10.** **F128**

Lifter, round with pilot pin hole to BMW standard

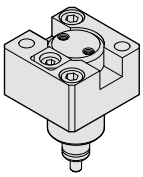

**2478.20.15.20.** **F129**

Lifter unit with installation block according to BMW standard

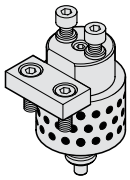

**2478.20.15.30.** **F130**

Universal lifter unit, according to BMW standard

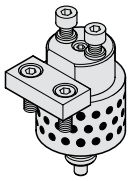

**2478.20.15.40.** **F131**

Universal lifter unit, according to BMW standard

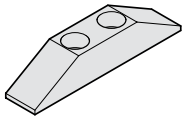

**2478.20.15.23.** **F132**

Lifter rail for lifter units to BMW standard

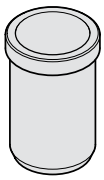

**2478.20.15.24.** **F132**

Holding sleeve for lifter units to BMW standard

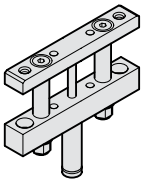

**2478.25.00090.** **F134**

Lifter unit with pillar guidance

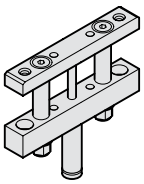

**2478.25.00200.** **F135**

Lifter unit with pillar guidance

**2478.** **F136**

Spring ram with gas spring

**2478.20. .1** **F137**

Spring ram with gas spring to VW standard

**2052.71.** **F138**

Guide bush for spring ram 2478.20. .1

**F140-143**

Gas springs - Description

**F144-145**

Gas springs - Installation guidelines

**F146-147**

FIBRO gas springs – The Safer Choice
Maximum safety for persons and tools

# CONTENTS


**F148-150**

Gas springs - Synopsis

**2479.030.** **F152**

Gas spring (Spring plunger), with hexagon socket, VDI 3004

**2479.031.** **F153**

Gas spring (Spring plunger), with hexagon socket, VDI 3004

**2479.032.** **F154**

Gas spring (Spring plunger), with hexagon socket, VDI 3004

**2479.034.** **F155**

Gas spring (Spring plunger), to WDX

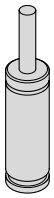

**2482.72.** **F158-159**

Gas spring, small dimension and low force

**2482.73. .1** **F160-161**

Gas spring, small dimension and low force

**2482.74. .2** **F162-163**

Gas spring, small dimension and low force

**2480.21.** **F164-165**

Gas spring, small dimension and low force

**2480.22. .1** **F166-167**

Gas spring, small dimension and low force

**2480.23.** **F168-169**

Gas spring, small dimension and low force

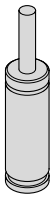

**2480.13.00250.** **F172-173**

Gas spring, Standard

**2480.13.00500.** **F174-175**

Gas spring, Standard

**2480.13.00750.** **F176-177**

Gas spring, Standard

**2480.12.01500.** **F178-179**

Gas spring, Standard

**2480.13.03000.** **F180-181**

Gas spring, Standard




subject to alterations

# CONTENTS


**2480.13.05000.** **F182-183**

Gas spring, Standard

**2480.13.07500.** **F184-185**

Gas spring, Standard

**2480.12.10000.** **F186-187**

Gas spring, Standard

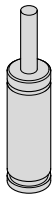

**2488.13.00750.** **F190-191**

Gas spring HEAVY DUTY

**2488.13.01000.** **F192-193**

Gas spring HEAVY DUTY

**2488.13.01500.** **F194-195**

Gas spring HEAVY DUTY

**2488.13.02400.** **F196-197**

Gas spring HEAVY DUTY

**2488.13.04200.** **F198-199**

Gas spring HEAVY DUTY

**2488.13.06600.** **F200-201**

Gas spring HEAVY DUTY

**2488.13.09500.** **F202-203**

Gas spring HEAVY DUTY

**2488.13.20000.** **F204-205**

Gas spring HEAVY DUTY

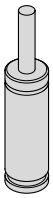

**2496.12.00270.** **F208-209**

Gas spring with through bore passage

**2496.12.00490.** **F210-211**

Gas spring with through bore passage

**2496.12.01060.** **F212-213**

Gas spring with through bore passage

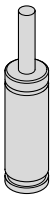

**2487.12.00170.** **F216-217**

Gas spring POWERLINE

**2487.12.00320.** **F218-219**

Gas spring POWERLINE

# CONTENTS


**2487.12.00350.** **F220-221**

Gas spring POWERLINE

**2487.12.00500.** **F222-223**

Gas spring POWERLINE

**2487.12.00750. .1** **F224-225**

Gas spring POWERLINE

**2487.12.01000. .1** **F226-227**

Gas spring POWERLINE

**2487.12.01500.** **F228-229**

Gas spring POWERLINE

**2487.12.02400.** **F230-231**

Gas spring POWERLINE

**2487.12.04200.** **F232-233**

Gas spring POWERLINE

**2487.12.06600.** **F234-235**

Gas spring POWERLINE

**2487.12.09500.** **F236-237**

Gas spring POWERLINE

**2487.12.20000.** **F238-239**

Gas spring POWERLINE

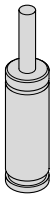

**2487.12.33.00350.** **F242-243**

Gas spring POWERLINE with reinforced spring base

**2487.12.33.00500.** **F244-245**

Gas spring POWERLINE with reinforced spring base

**2487.12.33.00750.** **F246-247**

Gas spring POWERLINE with reinforced spring base

**2487.12.33.01000.** **F248-249**

Gas spring POWERLINE with reinforced spring base

**2487.12.33.01500.** **F250-251**

Gas spring POWERLINE with reinforced spring base

**2487.12.33.02400.** **F252-253**

Gas spring POWERLINE with reinforced spring base




subject to alterations

# CONTENTS


**2487.12.33.04200.** **F254-255**

Gas spring POWERLINE with reinforced spring base

**2487.12.33.06600.** **F256-257**

Gas spring POWERLINE with reinforced spring base

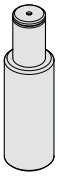

**2497.12.00500.** **F260-261**

Gas spring CX, Compact Xtreme

**2497.12.01000.** **F262-263**

Gas spring CX, Compact Xtreme

**2497.12.01900.** **F264-265**

Gas spring CX, Compact Xtreme

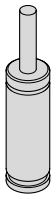

**2490.14.00420.** **F268-269**

Compact gas spring

**2490.14.00750.** **F270-271**

Compact gas spring

**2490.14.01000.** **F272-273**

Compact gas spring

**2490.14.01800.** **F274-275**

Compact gas spring

**2490.14.03000.** **F276-277**

Compact gas spring

**2490.14.04700.** **F278-279**

Compact gas spring

**2490.14.07500.** **F280-281**

Compact gas spring

**2490.14.11800.** **F282-283**

Compact gas spring

**2490.14.18300.** **F284-285**

Compact gas spring

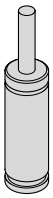

**2485.12.00500.** **F290-291**

Gas spring, with low build height

**2485.12.00750.** **F292-293**

Gas spring, with low build height

# CONTENTS


**2485.12.01500.** **F294-295**

Gas spring, with low build height

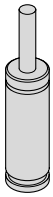

**2486.12.00750.** **F300-301**

Gas spring SPEED CONTROL, cushioned

**2486.12.01500.** **F302-303**

Gas spring SPEED CONTROL, cushioned

**2486.12.03000.** **F304-305**

Gas spring SPEED CONTROL, cushioned

**2486.12.05000.** **F306-307**

Gas spring SPEED CONTROL, cushioned

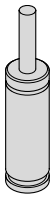

**2486.22.03000.** **F312-313**

Gas spring DS

**2486.22.05000.** **F314-315**

Gas spring DS

**2486.22.07500.** **F316-317**

Gas spring DS

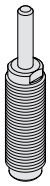

**2480.32.** **F322-323**

Gas spring with external thread

**2480.32.00250.** **F324-325**

Gas spring with external thread

**2480.82.00250.** **F326-327**

Gas spring with male fixing thread, small mounting height

**2487.82.01000.** **F328-329**

Gas spring with male fixing thread, POWERLINE

**2480.33.** **F330**

Gas spring with hexagonal flange

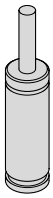

**2484.13.00750.** **F338-339**

LCF Gas Spring, damped

**2484.12.01500.** **F340-341**

LCF Gas Spring, damped

**2484.13.03000.** **F342-343**

LCF Gas Spring, damped

# CONTENTS


**2484.13.05000.** **F344-345**

LCF Gas Spring, damped

**2484.13.07500.** **F346-347**

LCF Gas Spring, damped

**2489.** **F348**

Controllable Gas springs

**2491.** **F349**

Air springs to VW Standard

**2495.** **F350**

Manifoldsystems

**2494.** **F351**

Composite plates

**F353**

Gas springs - Accessories

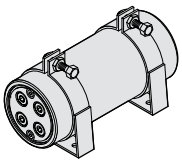

**2480.00.70.** **F354-355**

Pressure reservoir for reduced pressure rise

**2480.00.70.** **F356**

Mounting clamp for pressure reservoir

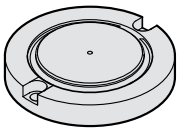

**2480.015.** **F357**

Pressure Plates, shock absorbing

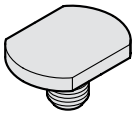

**2480.004.** **F358**

Thrust Pad

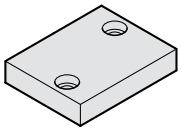

**2480.009.** **F358**

Pressure plate

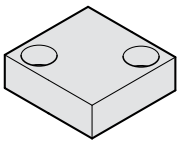

**2480.018.** **F358**

Pressure plate

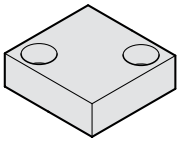

**2480.019.** **F359**

Pressure plate

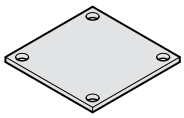

**2480.019.45.** **F359**

Pressure plate to Renault standard

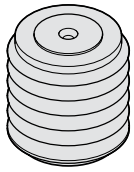

**2480.080.** **F360-361**

Concertina shroud for gas springs

# CONTENTS


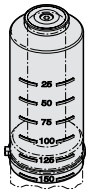


**2480.081.** **F362**

Piston rod protection, FIBRO-TEX®

**2480.081.00.057.** **F363**

Retaining plate for saddle flange

**2480.081.00.007** **F363**

Cable tie pliers

**F364**

Gas springs - Connector systems

**F365-369**

Mounting arrangement for gas springs
in the Minimess system

**F365**

Instructions for hose assembly
in Minimess system

**2480.00.23.01.** **F370**

Gauging hose both ends straight

**2480.00.23.02.** **F370**

Gauging hose one end straight
90°-angle

**2480.00.23.03.** **F370**

Gauging hose both ends 90°-angle

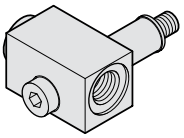

**2480.00.24.** **F371-374**

Minimess – Compound threaded joints

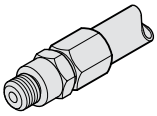

**2480.00.10.** **F375-376**

Compression fitting – Compound threaded joints

**F377**

Assembly arrangenment of gas springs in servial connection compression fitting

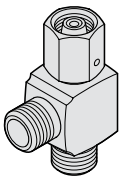

**2480.00.26.** **F378, F380**

24°-cone screw connections

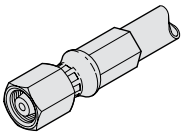

**2480.00.25.** **F379**

24°-cone connection hoses

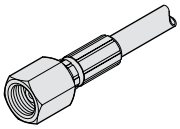

**2480.00.27.01.** **F380-382**

Connector system, 24° conus micro

**2480.00.28.** **F383-385**

Connector system, 24° conus micro

# CONTENTS


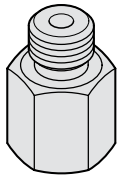

**2480.00.22.** **F384**

Connector system, micro

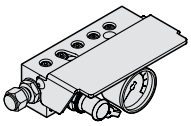

**2480.00.34.1x.1** **F386**

Control fitting

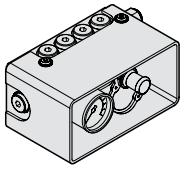

**2480.00.30.0x.1** **F387**

Control fitting

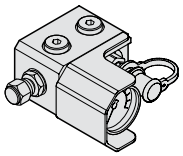

**2480.00.31.0x.1** **F387**

Control fitting

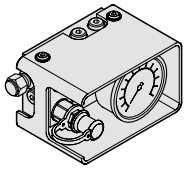

**2480.00.30.1x.1** **F388**

Control fitting

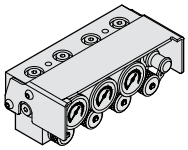

**2480.00.39.05.** **F389**

Multiple control fitting

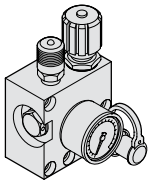

**2480.00.31.11.1** **F390**

Control fitting

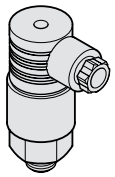

**2480.00.45.01/02** **F391**

Diaphragm pressure switch

**2480.00.45.10** **F391**

Adapter Block

**2480.00.45.00.01.** **F391**

Screw connection GE-G1/4-G1/8

**2480.00.45.05** **F392**

Diaphragm pressure switch, digital

**F393**

Wireless Pressure Monitoring - wireless gas spring monitoring

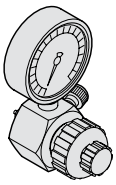

**2480.00.32.21** **F395**

Filling and control fitting

**2480.00.31.02** **F395**

Filling hose

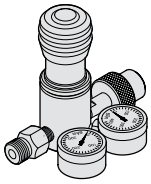

**2480.00.32.07.** **F395**

Cylinder pressure regulator

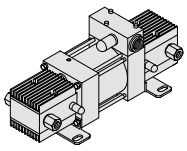

**2480.00.32.71** **F396-397**

Compact Nitrogen Booster

# CONTENTS


**2480.00.32.71.02** **F397**

Holding plate

**2480.00.35.0xx** **F398**

Dynamometer for gas springs

**2480.00.35.04** **F399**

Dynamometer for gas springs

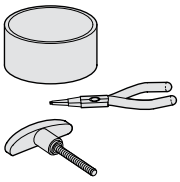

**2480.00.50.11** **F400**

Toolkit for assembling gas springs

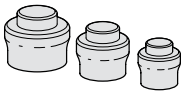

**2480.00.50.04.** **F401**

Assembling cone

**2480.00.54.10** **F402**

Pneumatic hose crimping machine

**2480.00.54.03** **F402-403**

Hose shears

**2480.00.54.20** **F403**

Hand held hose crimping machine, electric (battery powered)

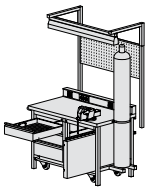

**2480.00.50.20.** **F404**

Service station, mobile, for gas springs

**F405-412**

Gas springs - Example applications

# GENERAL OVERVIEW
# GAS SPRINGS - HIGH PERFORMANCE COMPRESSION SPRING - FIBROFLEX® SPRINGS

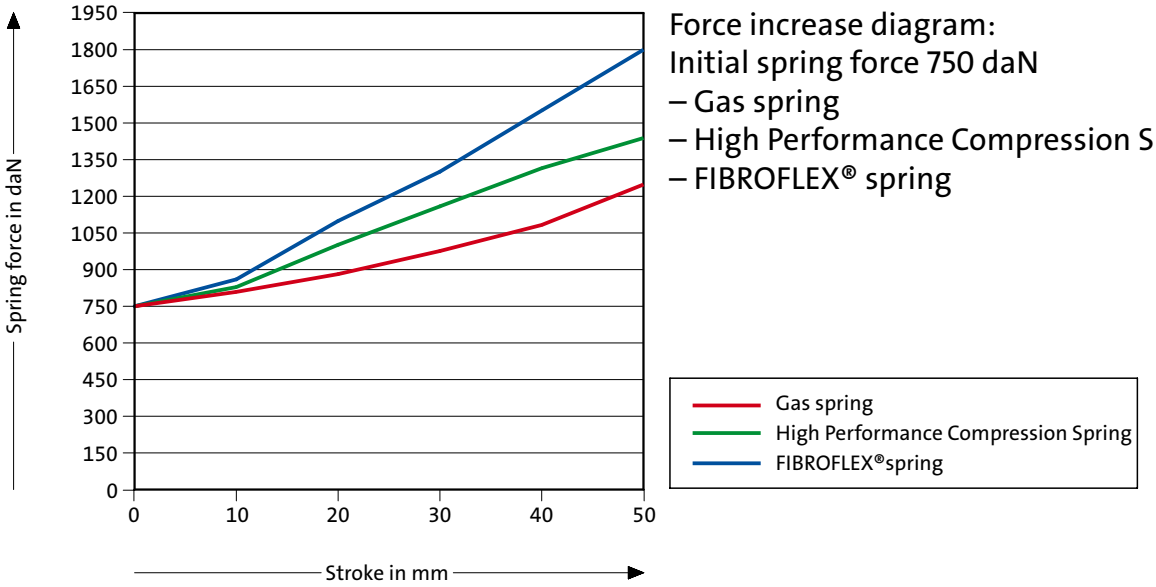


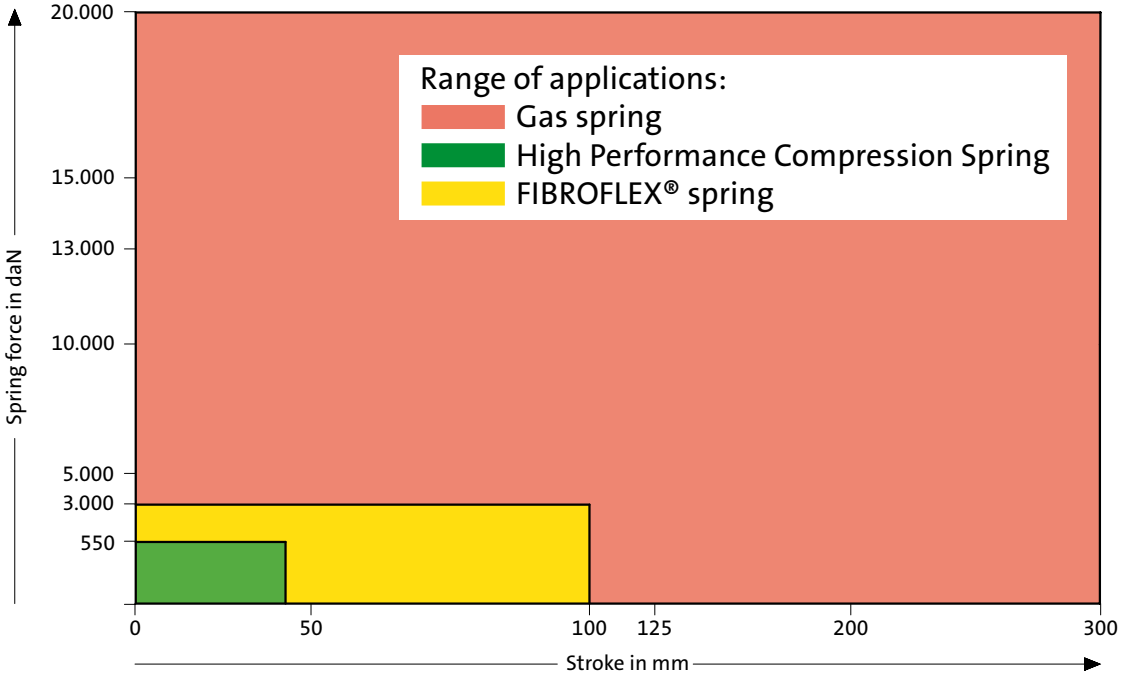

# HIGH PERFORMANCE COMPRESSION SPRINGS

# HIGH PERFORMANCE COMPRESSION SPRINGS - DESCRIPTION

## Service Data for Limited-/Extended Spring Life

The achievable service life of helical compression springs depends to a large extent on the composition of the spring wire, the operating conditions, and on design parameters.
In all applications with oscillating spring displacement, careful selection of both preload values and compressive displacement are prerequisites for extended spring life, as confirmed by the permissible stress values in the loading data tables and the stress/spring life diagram.
Shear stress maxima and spring oscillation stress differentials are a direct function of the quality of the spring wire. FIBRO High Performance Compression Springs are made exclusively from special alloyed chrome-steel.

For extended spring life under oscillating load changes, the maximal shear stress $\tau_{zul.}$ is 800 N/mm², of which some 400 N/mm² = ($\tau_h$).
Higher stress levels are permissible only under the proviso of limited life expectancy, or in cases of static and quasi-static load conditions.

Springs subjected to dynamic load conditions also suffer impairment to their life expectancy through influences such as extreme operating temperatures, transversal stress components, shock loads, and resonant vibration frequencies. In all these instances, a lowering of the stress levels assists towards better spring life.

## Working temperature

The spring material used has a working temperature of up to 250 °C. This rating is an approximation since the actual approved working temperature will also depend on factors such as load. It is worth noting that above 100 °C the modulus of elasticity decreases and with a reduction in tension setting starts to occur.

## Extended Spring Life: Spring Displacement Values

The largest permissible displacement is indicated by $S_6$ – offering about 62% of the "total" displacement of the wire-to-wire compacted spring (= $S_n$). This displacement will induce a shear stress of $\tau_{admis.}$ of 800 N/mm². The associated stress differential during oscillations should not exceed 400 N/mm² (= $\tau_h$).

## Calculation of spring forces

Simple multiplication of the spring coefficient R with the applicable displacement S (mm) yields the spring force value (N).

## Spring Force versus Spring Displacement

The relevant tables show the force values for selected displacements of 45, 62, 80 and 100% compression. Intermediate force values can be extra-polated from the Stress/Spring Life Diagram.

# HIGH PERFORMANCE COMPRESSION SPRINGS - TIME AND SPRING LIFE DIAGRAM

**241.**

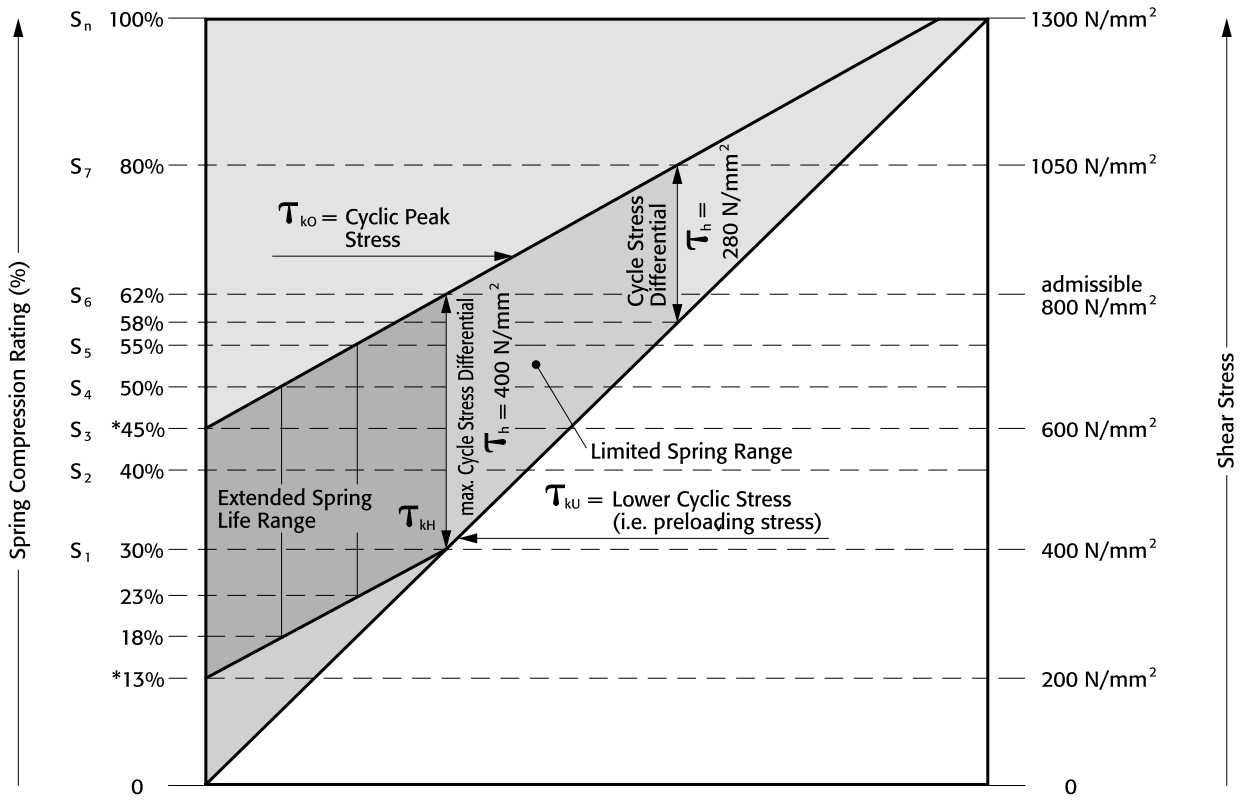


* For application within Extended Spring Life:
up to a compression rating of 45%, a preloading compression of 13% applies.
e. g.: up to a compression rating of 55% a preloading compression of 23% is required.

| | | |
|---|---|---|
| $D_h$ | = | Diameter of guide sleeve |
| $D_d$ | = | diameter of guide pin |
| $L_0$ | = | Free length of spring |
| $L_1 \ldots L_n$ | = | length of loaded spring, as related to Spring forces $F_1 \ldots F_n$ |
| $L_{BL}$ | = | length of compacted spring (i.e. wire-to-wire) |
| $F_1 \ldots F_n$ | = | Spring forces in N assigned to the spring lengths $L_1 \ldots L_n$ |
| $S_{v1} \ldots S_{v7}$ | = | min. spring preload path assigned to spring range $S_1 \ldots S_7$ |
| $S_1 \ldots S_n$ | = | Spring paths assigned to spring forces $F_1 \ldots F_n$ |
| R | = | Spring rate in N/mm |
| $S_{A1} \ldots S_{A7}$ | = | Working stroke of spring (stroke) |

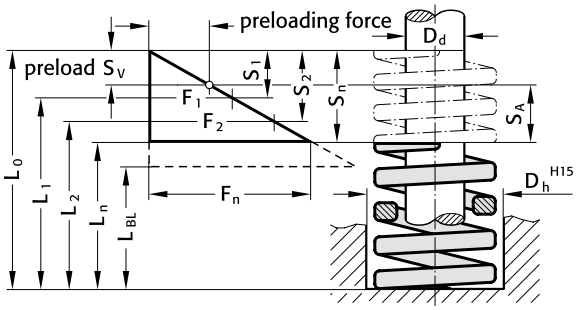


Working stroke of spring $S_{A1} \ldots S_{A7}$ = stroke ($S_1 \ldots S_7$) – Spring preload path ($S_{v1} \ldots S_{v7}$)

Please note: 80% compression must not be exceeded!

# HIGH PERFORMANCE COMPRESSION SPRING, XSF, COLOUR "VIOLET"

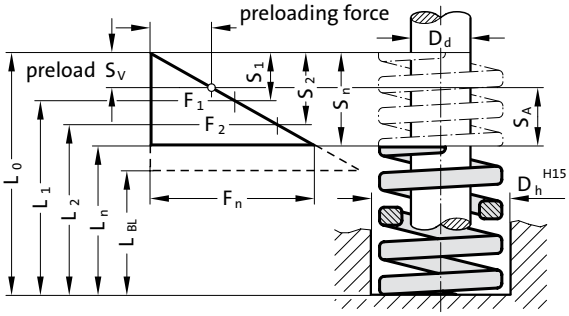


$D_h$ = dia. of guide sleeve
$D_d$ = diameter of guide pin
$L_0$ = free length of spring
$L_1...L_n$ = length of loaded spring (mm) as related to spring forces $F_1...F_n$
$L_{BL}$ = length of compacted spring (i.e. wire-to-wire)
$F_1...F_n$ = forces (N) as related to length of spring $L_1...L_n$
$S_{V1}...S_{V7}$ = recommend. preload. compression, as relat. to compress. $S_1...S_7$
$S_1...S_n$ = compr. as related to spring forces $F_1...F_n$
R = spring rate (N/mm)
$S_{A1}...S_{A7}$ = working stroke (mm)

## 241.13. High performance compression spring, XSF, Colour "Violet"

| | | | | | 45% | | | | 62% | | | | 80% | | | | 100% | |
|---|---|---|---|---|---|---|---|---|---|---|---|---|---|---|---|---|---|---|
| Order No | $D_h$ | $D_d$ | $L_0$ | R | $S_1$ | $S_{V1}$ | $S_{A1}$ | $F_1$ | $S_2$ | $S_{V2}$ | $S_{A2}$ | $F_2$ | $S_3$ | $S_{V3}$ | $S_{A3}$ | $F_3$ | $S_n$ | $F_n$ |
| 241.13.20.025 | 20 | 10 | 25 | 32.1 | 6.3 | 1.8 | 4.5 | 202 | 8.7 | 4.2 | 4.5 | 279 | 11.2 | 8.1 | 3.1 | 360 | 14 | 449 |
| 241.13.20.032 | 20 | 10 | 32 | 24.7 | 8.1 | 2.3 | 5.8 | 200 | 11.2 | 5.4 | 5.8 | 276 | 14.4 | 10.4 | 4 | 356 | 18 | 445 |
| 241.13.20.038 | 20 | 10 | 38 | 20.7 | 9.9 | 2.9 | 7 | 205 | 13.6 | 6.6 | 7 | 282 | 17.6 | 12.8 | 4.8 | 364 | 22 | 455 |
| 241.13.20.044 | 20 | 10 | 44 | 17.8 | 11.7 | 3.4 | 8.3 | 208 | 16.1 | 7.8 | 8.3 | 287 | 20.8 | 15.1 | 5.7 | 370 | 26 | 463 |
| 241.13.20.051 | 20 | 10 | 51 | 15.3 | 13.5 | 3.9 | 9.6 | 207 | 18.6 | 9 | 9.6 | 285 | 24 | 17.4 | 6.6 | 367 | 30 | 459 |
| 241.13.20.064 | 20 | 10 | 64 | 12.1 | 17.1 | 4.9 | 12.2 | 207 | 23.6 | 11.4 | 12.2 | 285 | 30.4 | 22 | 8.4 | 368 | 38 | 460 |
| 241.13.20.076 | 20 | 10 | 76 | 10.2 | 20.2 | 5.8 | 14.4 | 207 | 27.9 | 13.5 | 14.4 | 285 | 36 | 26.1 | 9.9 | 367 | 45 | 459 |
| 241.13.20.089 | 20 | 10 | 89 | 8.6 | 23.8 | 6.9 | 17 | 205 | 32.9 | 15.9 | 17 | 283 | 42.4 | 30.7 | 11.7 | 365 | 53 | 456 |
| 241.13.20.102 | 20 | 10 | 102 | 7.5 | 27.9 | 8.1 | 19.8 | 209 | 38.4 | 18.6 | 19.8 | 288 | 49.6 | 36 | 13.6 | 372 | 62 | 465 |
| 241.13.20.115 | 20 | 10 | 115 | 6.7 | 31.5 | 9.1 | 22.4 | 211 | 43.4 | 21 | 22.4 | 291 | 56 | 40.6 | 15.4 | 375 | 70 | 469 |
| 241.13.20.127 | 20 | 10 | 127 | 6.1 | 34.6 | 10 | 24.6 | 211 | 47.7 | 23.1 | 24.6 | 291 | 61.6 | 44.7 | 16.9 | 376 | 77 | 470 |
| 241.13.20.139 | 20 | 10 | 139 | 5.5 | 38.2 | 11 | 27.2 | 210 | 52.7 | 25.5 | 27.2 | 290 | 68 | 49.3 | 18.7 | 374 | 85 | 468 |
| 241.13.20.152 | 20 | 10 | 152 | 5.1 | 41.8 | 12.1 | 29.8 | 213 | 57.7 | 27.9 | 29.8 | 294 | 74.4 | 53.9 | 20.5 | 379 | 93 | 474 |
| 241.13.20.305 | 20 | 10 | 305 | 2.5 | 84.6 | 24.4 | 60.2 | 212 | 116.6 | 56.4 | 60.2 | 291 | 150.4 | 109 | 41.4 | 376 | 188 | 470 |
| 241.13.25.025 | 25 | 12 | 25 | 52.7 | 6.3 | 1.8 | 4.5 | 332 | 8.7 | 4.2 | 4.5 | 457 | 11.2 | 8.1 | 3.1 | 590 | 14 | 738 |
| 241.13.25.032 | 25 | 12 | 32 | 40 | 8.1 | 2.3 | 5.8 | 324 | 11.2 | 5.4 | 5.8 | 446 | 14.4 | 10.4 | 4 | 576 | 18 | 720 |
| 241.13.25.038 | 25 | 12 | 38 | 33.3 | 9.9 | 2.9 | 7 | 330 | 13.6 | 6.6 | 7 | 454 | 17.6 | 12.8 | 4.8 | 586 | 22 | 733 |
| 241.13.25.044 | 25 | 12 | 44 | 28.6 | 11.2 | 3.2 | 8 | 322 | 15.5 | 7.5 | 8 | 443 | 20 | 14.5 | 5.5 | 572 | 25 | 715 |
| 241.13.25.051 | 25 | 12 | 51 | 24.7 | 13.5 | 3.9 | 9.6 | 333 | 18.6 | 9 | 9.6 | 459 | 24 | 17.4 | 6.6 | 593 | 30 | 741 |
| 241.13.25.064 | 25 | 12 | 64 | 19.4 | 17.1 | 4.9 | 12.2 | 332 | 23.6 | 11.4 | 12.2 | 457 | 30.4 | 22 | 8.4 | 590 | 38 | 737 |
| 241.13.25.076 | 25 | 12 | 76 | 16.3 | 20.2 | 5.8 | 14.4 | 330 | 27.9 | 13.5 | 14.4 | 455 | 36 | 26.1 | 9.9 | 587 | 45 | 734 |
| 241.13.25.089 | 25 | 12 | 89 | 15.9 | 23.8 | 6.9 | 17 | 379 | 32.9 | 15.9 | 17 | 522 | 42.4 | 30.7 | 11.7 | 674 | 53 | 843 |
| 241.13.25.102 | 25 | 12 | 102 | 12.1 | 27.4 | 7.9 | 19.5 | 332 | 37.8 | 18.3 | 19.5 | 458 | 48.8 | 35.4 | 13.4 | 590 | 61 | 738 |
| 241.13.25.115 | 25 | 12 | 115 | 10.8 | 31.5 | 9.1 | 22.4 | 340 | 43.4 | 21 | 22.4 | 469 | 56 | 40.6 | 15.4 | 605 | 70 | 756 |
| 241.13.25.127 | 25 | 12 | 127 | 9.8 | 34.6 | 10 | 24.6 | 340 | 47.7 | 23.1 | 24.6 | 468 | 61.6 | 44.7 | 16.9 | 604 | 77 | 755 |
| 241.13.25.139 | 25 | 12 | 139 | 8.9 | 38.2 | 11 | 27.2 | 340 | 52.7 | 25.5 | 27.2 | 469 | 68 | 49.3 | 18.7 | 605 | 85 | 756 |
| 241.13.25.152 | 25 | 12 | 152 | 8.1 | 41.8 | 12.1 | 29.8 | 339 | 57.7 | 27.9 | 29.8 | 467 | 74.4 | 53.9 | 20.5 | 603 | 93 | 753 |
| 241.13.25.178 | 25 | 12 | 178 | 6.9 | 49 | 14.2 | 34.9 | 338 | 67.6 | 32.7 | 34.9 | 466 | 87.2 | 63.2 | 24 | 602 | 109 | 752 |
| 241.13.25.203 | 25 | 12 | 203 | 6.1 | 55.8 | 16.1 | 39.7 | 340 | 76.9 | 37.2 | 39.7 | 469 | 99.2 | 71.9 | 27.3 | 605 | 124 | 756 |
| 241.13.25.305 | 25 | 12 | 305 | 4 | 84.6 | 24.4 | 60.2 | 338 | 116.6 | 56.4 | 60.2 | 466 | 150.4 | 109 | 41.4 | 602 | 188 | 752 |
| 241.13.32.038 | 32 | 16 | 38 | 43.8 | 9.9 | 2.9 | 7 | 434 | 13.6 | 6.6 | 7 | 597 | 17.6 | 12.8 | 4.8 | 771 | 22 | 964 |
| 241.13.32.044 | 32 | 16 | 44 | 37.5 | 11.7 | 3.4 | 8.3 | 439 | 16.1 | 7.8 | 8.3 | 604 | 20.8 | 15.1 | 5.7 | 780 | 26 | 975 |
| 241.13.32.051 | 32 | 16 | 51 | 32.3 | 14 | 4 | 9.9 | 451 | 19.2 | 9.3 | 9.9 | 621 | 24.8 | 18 | 6.8 | 801 | 31 | 1001 |
| 241.13.32.064 | 32 | 16 | 64 | 25.4 | 17.6 | 5.1 | 12.5 | 446 | 24.2 | 11.7 | 12.5 | 614 | 31.2 | 22.6 | 8.6 | 792 | 39 | 991 |
| 241.13.32.076 | 32 | 16 | 76 | 21.3 | 21.2 | 6.1 | 15 | 450 | 29.1 | 14.1 | 15 | 621 | 37.6 | 27.3 | 10.3 | 801 | 47 | 1001 |
| 241.13.32.089 | 32 | 16 | 89 | 18.1 | 25.2 | 7.3 | 17.9 | 456 | 34.7 | 16.8 | 17.9 | 628 | 44.8 | 32.5 | 12.3 | 811 | 56 | 1014 |
| 241.13.32.102 | 32 | 16 | 102 | 15.8 | 28.8 | 8.3 | 20.5 | 455 | 39.7 | 19.2 | 20.5 | 627 | 51.2 | 37.1 | 14.1 | 809 | 64 | 1011 |
| 241.13.32.115 | 32 | 16 | 115 | 13.9 | 32.8 | 9.5 | 23.4 | 457 | 45.3 | 21.9 | 23.4 | 629 | 58.4 | 42.3 | 16.1 | 812 | 73 | 1015 |
| 241.13.32.127 | 32 | 16 | 127 | 12.6 | 36.4 | 10.5 | 25.9 | 459 | 50.2 | 24.3 | 25.9 | 633 | 64.8 | 47 | 17.8 | 816 | 81 | 1021 |
| 241.13.32.139 | 32 | 16 | 139 | 11.4 | 40 | 11.6 | 28.5 | 457 | 55.2 | 26.7 | 28.5 | 629 | 71.2 | 51.6 | 19.6 | 812 | 89 | 1015 |
| 241.13.32.152 | 32 | 16 | 152 | 10.5 | 43.6 | 12.6 | 31 | 458 | 60.1 | 29.1 | 31 | 631 | 77.6 | 56.3 | 21.3 | 815 | 97 | 1018 |
| 241.13.32.178 | 32 | 16 | 178 | 8.9 | 51.3 | 14.8 | 36.5 | 457 | 70.7 | 34.2 | 36.5 | 629 | 91.2 | 66.1 | 25.1 | 812 | 114 | 1015 |
| 241.13.32.203 | 32 | 16 | 203 | 7.8 | 59 | 17 | 41.9 | 460 | 81.2 | 39.3 | 41.9 | 634 | 104.8 | 76 | 28.8 | 817 | 131 | 1022 |
| 241.13.32.254 | 32 | 16 | 254 | 6.2 | 73.4 | 21.2 | 52.2 | 455 | 101.1 | 48.9 | 52.2 | 627 | 130.4 | 94.5 | 35.9 | 808 | 163 | 1011 |

# HIGH PERFORMANCE COMPRESSION SPRING, XSF, COLOUR "VIOLET"

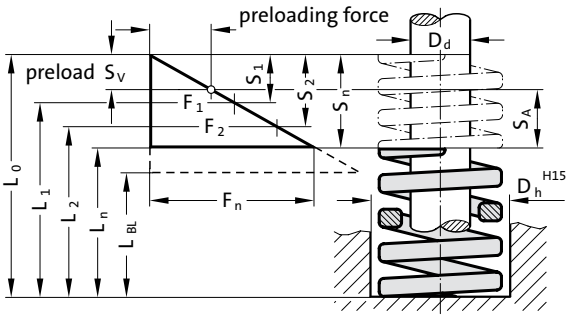


$D_h$ = dia. of guide sleeve
$D_d$ = diameter of guide pin
$L_0$ = free length of spring
$L_1...L_n$ = length of loaded spring (mm) as related to spring forces $F_1...F_n$
$L_{BL}$ = length of compacted spring (i.e. wire-to-wire)
$F_1...F_n$ = forces (N) as related to length of spring $L_1...L_n$
$S_{V1}...S_{V7}$ = recommend. preload. compression, as relat. to compress. $S_1...S_7$
$S_1...S_n$ = compr. as related to spring forces $F_1...F_n$
R = spring rate (N/mm)
$S_{A1}...S_{A7}$ = working stroke (mm)

### 241.13. High performance compression spring, XSF, Colour "Violet"

| | | | | | 45% | | | | 62% | | | | 80% | | | | 100% | |
|---|---|---|---|---|---|---|---|---|---|---|---|---|---|---|---|---|---|---|
| Order No | $D_h$ | $D_d$ | $L_0$ | R | $S_1$ | $S_{V1}$ | $S_{A1}$ | $F_1$ | $S_2$ | $S_{V2}$ | $S_{A2}$ | $F_2$ | $S_3$ | $S_{V3}$ | $S_{A3}$ | $F_3$ | $S_n$ | $F_n$ |
| 241.13.32.305 | 32 | 16 | 305 | 5.2 | 88.6 | 25.6 | 63 | 461 | 122.1 | 59.1 | 63 | 635 | 157.6 | 114.3 | 43.3 | 820 | 197 | 1024 |
| 241.13.40.051 | 40 | 20 | 51 | 50.8 | 11.7 | 3.4 | 8.3 | 594 | 16.1 | 7.8 | 8.3 | 819 | 20.8 | 15.1 | 5.7 | 1057 | 26 | 1321 |
| 241.13.40.064 | 40 | 20 | 64 | 39.7 | 15.3 | 4.4 | 10.9 | 607 | 21.1 | 10.2 | 10.9 | 837 | 27.2 | 19.7 | 7.5 | 1080 | 34 | 1350 |
| 241.13.40.076 | 40 | 20 | 76 | 33.1 | 18 | 5.2 | 12.8 | 596 | 24.8 | 12 | 12.8 | 821 | 32 | 23.2 | 8.8 | 1059 | 40 | 1324 |
| 241.13.40.089 | 40 | 20 | 89 | 28.1 | 21.6 | 6.2 | 15.4 | 607 | 29.8 | 14.4 | 15.4 | 836 | 38.4 | 27.8 | 10.6 | 1079 | 48 | 1349 |
| 241.13.40.102 | 40 | 20 | 102 | 24.5 | 24.8 | 7.2 | 17.6 | 606 | 34.1 | 16.5 | 17.6 | 835 | 44 | 31.9 | 12.1 | 1078 | 55 | 1348 |
| 241.13.40.115 | 40 | 20 | 115 | 21.6 | 28.4 | 8.2 | 20.2 | 612 | 39.1 | 18.9 | 20.2 | 844 | 50.4 | 36.5 | 13.9 | 1089 | 63 | 1361 |
| 241.13.40.127 | 40 | 20 | 127 | 19.5 | 31.5 | 9.1 | 22.4 | 614 | 43.4 | 21 | 22.4 | 846 | 56 | 40.6 | 15.4 | 1092 | 70 | 1365 |
| 241.13.40.139 | 40 | 20 | 139 | 17.8 | 34.2 | 9.9 | 24.3 | 609 | 47.1 | 22.8 | 24.3 | 839 | 60.8 | 44.1 | 16.7 | 1082 | 76 | 1353 |
| 241.13.40.152 | 40 | 20 | 152 | 16.3 | 37.8 | 10.9 | 26.9 | 616 | 52.1 | 25.2 | 26.9 | 849 | 67.2 | 48.7 | 18.5 | 1095 | 84 | 1369 |
| 241.13.40.178 | 40 | 20 | 178 | 13.8 | 44.6 | 12.9 | 31.7 | 615 | 61.4 | 29.7 | 31.7 | 847 | 79.2 | 57.4 | 21.8 | 1093 | 99 | 1366 |
| 241.13.40.203 | 40 | 20 | 203 | 12.1 | 50.8 | 14.7 | 36.2 | 615 | 70.1 | 33.9 | 36.2 | 848 | 90.4 | 65.5 | 24.9 | 1094 | 113 | 1367 |
| 241.13.40.254 | 40 | 20 | 254 | 9.7 | 63.9 | 18.5 | 45.4 | 620 | 88 | 42.6 | 45.4 | 854 | 113.6 | 82.4 | 31.2 | 1102 | 142 | 1377 |
| 241.13.40.305 | 40 | 20 | 305 | 8 | 77 | 22.2 | 54.7 | 616 | 106 | 51.3 | 54.7 | 848 | 136.8 | 99.2 | 37.6 | 1094 | 171 | 1368 |
| 241.13.50.064 | 50 | 25 | 64 | 80.2 | 16.6 | 4.8 | 11.8 | 1335 | 22.9 | 11.1 | 11.8 | 1840 | 29.6 | 21.5 | 8.1 | 2374 | 37 | 2967 |
| 241.13.50.076 | 50 | 25 | 76 | 66.9 | 20.2 | 5.8 | 14.4 | 1355 | 27.9 | 13.5 | 14.4 | 1867 | 36 | 26.1 | 9.9 | 2408 | 45 | 3010 |
| 241.13.50.089 | 50 | 25 | 89 | 56.6 | 23.8 | 6.9 | 17 | 1350 | 32.9 | 15.9 | 17 | 1860 | 42.4 | 30.7 | 11.7 | 2400 | 53 | 3000 |
| 241.13.50.102 | 50 | 25 | 102 | 40.3 | 27.9 | 8.1 | 19.8 | 1124 | 38.4 | 18.6 | 19.8 | 1549 | 49.6 | 36 | 13.6 | 1999 | 62 | 2499 |
| 241.13.50.115 | 50 | 25 | 115 | 43.5 | 31.5 | 9.1 | 22.4 | 1370 | 43.4 | 21 | 22.4 | 1888 | 56 | 40.6 | 15.4 | 2436 | 70 | 3045 |
| 241.13.50.127 | 50 | 25 | 127 | 39.3 | 35.1 | 10.1 | 25 | 1379 | 48.4 | 23.4 | 25 | 1901 | 62.4 | 45.2 | 17.2 | 2452 | 78 | 3065 |
| 241.13.50.139 | 50 | 25 | 139 | 35.8 | 38.2 | 11 | 27.2 | 1369 | 52.7 | 25.5 | 27.2 | 1887 | 68 | 49.3 | 18.7 | 2434 | 85 | 3043 |
| 241.13.50.152 | 50 | 25 | 152 | 32.8 | 42.3 | 12.2 | 30.1 | 1387 | 58.3 | 28.2 | 30.1 | 1912 | 75.2 | 54.5 | 20.7 | 2467 | 94 | 3083 |
| 241.13.50.178 | 50 | 25 | 178 | 27.8 | 49.5 | 14.3 | 35.2 | 1376 | 68.2 | 33 | 35.2 | 1896 | 88 | 63.8 | 24.2 | 2446 | 110 | 3058 |
| 241.13.50.203 | 50 | 25 | 203 | 24.2 | 56.7 | 16.4 | 40.3 | 1372 | 78.1 | 37.8 | 40.3 | 1891 | 100.8 | 73.1 | 27.7 | 2439 | 126 | 3049 |
| 241.13.50.254 | 50 | 25 | 254 | 19.2 | 71.6 | 20.7 | 50.9 | 1374 | 98.6 | 47.7 | 50.9 | 1893 | 127.2 | 92.2 | 35 | 2442 | 159 | 3053 |
| 241.13.50.305 | 50 | 25 | 305 | 16 | 86.4 | 25 | 61.4 | 1382 | 119 | 57.6 | 61.4 | 1905 | 153.6 | 111.4 | 42.2 | 2458 | 192 | 3072 |

# HIGH PERFORMANCE COMPRESSION SPRING, SF, COLOUR "GREEN", DIN ISO 10243

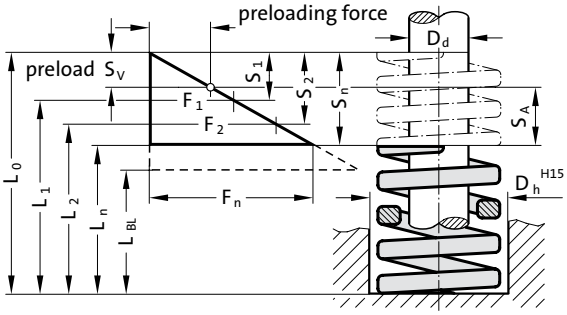


$D_h$ = dia. of guide sleeve
$D_d$ = diameter of guide pin
$L_0$ = free length of spring
$L_1...L_n$ = length of loaded spring (mm) as related to spring forces $F_1...F_n$
$L_{BL}$ = length of compacted spring (i.e. wire-to-wire)
$F_1...F_n$ = forces (N) as related to length of spring $L_1...L_n$
$S_{V1}...S_{V7}$ = recommend. preload. compression, as relat. to compress. $S_1...S_7$
$S_1...S_n$ = compr. as related to spring forces $F_1...F_n$
R = spring rate (N/mm)
$S_{A1}...S_{A7}$ = working stroke (mm)

## 241.14. High performance compression spring, SF, Colour "Green", DIN ISO 10243

| | | | | | 45% | | | | 62% | | | | 80% | | | | 100% | |
|---|---|---|---|---|---|---|---|---|---|---|---|---|---|---|---|---|---|---|
| Order No | $D_h$ | $D_d$ | $L_0$ | R | $S_1$ | $S_{V1}$ | $S_{A1}$ | $F_1$ | $S_2$ | $S_{V2}$ | $S_{A2}$ | $F_2$ | $S_3$ | $S_{V3}$ | $S_{A3}$ | $F_3$ | $S_n$ | $F_n$ |
| 241.14.10.025 | 10 | 5 | 25 | 11 | 5.6 | 1.6 | 4 | 62 | 7.8 | 3.8 | 4 | 85 | 10 | 7.2 | 2.8 | 110 | 12.5 | 138 |
| 241.14.10.032 | 10 | 5 | 32 | 8.5 | 7.2 | 2.1 | 5.1 | 61 | 9.9 | 4.8 | 5.1 | 84 | 12.8 | 9.3 | 3.5 | 109 | 16 | 136 |
| 241.14.10.038 | 10 | 5 | 38 | 6.8 | 8.6 | 2.5 | 6.1 | 58 | 11.8 | 5.7 | 6.1 | 80 | 15.2 | 11 | 4.2 | 103 | 19 | 129 |
| 241.14.10.044 | 10 | 5 | 44 | 6 | 9.9 | 2.9 | 7 | 59 | 13.6 | 6.6 | 7 | 82 | 17.6 | 12.8 | 4.8 | 106 | 22 | 132 |
| 241.14.10.051 | 10 | 5 | 51 | 5 | 11.5 | 3.3 | 8.2 | 57 | 15.8 | 7.6 | 8.2 | 79 | 20.4 | 14.8 | 5.6 | 102 | 25.5 | 128 |
| 241.14.10.064 | 10 | 5 | 64 | 4.1 | 14.4 | 4.2 | 10.2 | 59 | 19.8 | 9.6 | 10.2 | 81 | 25.6 | 18.6 | 7 | 105 | 32 | 131 |
| 241.14.10.076 | 10 | 5 | 76 | 3.6 | 17.1 | 4.9 | 12.2 | 62 | 23.6 | 11.4 | 12.2 | 85 | 30.4 | 22 | 8.4 | 109 | 38 | 137 |
| 241.14.10.305 | 10 | 5 | 305 | 0.9 | 68.6 | 19.8 | 48.8 | 62 | 94.6 | 45.8 | 48.8 | 85 | 122 | 88.4 | 33.6 | 110 | 152.5 | 137 |
| 241.14.13.025 | 12 | 6 | 25 | 21 | 5.6 | 1.6 | 4 | 118 | 7.8 | 3.8 | 4 | 163 | 10 | 7.2 | 2.8 | 210 | 12.5 | 262 |
| 241.14.13.032 | 12 | 6 | 32 | 16.4 | 7.2 | 2.1 | 5.1 | 118 | 9.9 | 4.8 | 5.1 | 163 | 12.8 | 9.3 | 3.5 | 210 | 16 | 262 |
| 241.14.13.038 | 12 | 6 | 38 | 13.6 | 8.6 | 2.5 | 6.1 | 116 | 11.8 | 5.7 | 6.1 | 160 | 15.2 | 11 | 4.2 | 207 | 19 | 258 |
| 241.14.13.044 | 12 | 6 | 44 | 12.1 | 9.9 | 2.9 | 7 | 120 | 13.6 | 6.6 | 7 | 165 | 17.6 | 12.8 | 4.8 | 213 | 22 | 266 |
| 241.14.13.051 | 12 | 6 | 51 | 10.3 | 11.5 | 3.3 | 8.2 | 118 | 15.8 | 7.6 | 8.2 | 163 | 20.4 | 14.8 | 5.6 | 210 | 25.5 | 263 |
| 241.14.13.064 | 12 | 6 | 64 | 7.6 | 14.4 | 4.2 | 10.2 | 109 | 19.8 | 9.6 | 10.2 | 151 | 25.6 | 18.6 | 7 | 195 | 32 | 243 |
| 241.14.13.076 | 12 | 6 | 76 | 6.3 | 17.1 | 4.9 | 12.2 | 108 | 23.6 | 11.4 | 12.2 | 148 | 30.4 | 22 | 8.4 | 192 | 38 | 239 |
| 241.14.13.089 | 12 | 6 | 89 | 5.4 | 20 | 5.8 | 14.2 | 108 | 27.6 | 13.4 | 14.2 | 149 | 35.6 | 25.8 | 9.8 | 192 | 44.5 | 240 |
| 241.14.13.305 | 12 | 6 | 305 | 1.6 | 68.6 | 19.8 | 48.8 | 110 | 94.6 | 45.8 | 48.8 | 151 | 122 | 88.4 | 33.6 | 195 | 152.5 | 244 |
| 241.14.16.025 | 16 | 8 | 25 | 29 | 5.6 | 1.6 | 4 | 163 | 7.8 | 3.8 | 4 | 225 | 10 | 7.2 | 2.8 | 290 | 12.5 | 362 |
| 241.14.16.032 | 16 | 8 | 32 | 22.9 | 7.2 | 2.1 | 5.1 | 165 | 9.9 | 4.8 | 5.1 | 227 | 12.8 | 9.3 | 3.5 | 293 | 16 | 366 |
| 241.14.16.038 | 16 | 8 | 38 | 19.3 | 8.6 | 2.5 | 6.1 | 165 | 11.8 | 5.7 | 6.1 | 227 | 15.2 | 11 | 4.2 | 293 | 19 | 367 |
| 241.14.16.044 | 16 | 8 | 44 | 17.1 | 9.9 | 2.9 | 7 | 169 | 13.6 | 6.6 | 7 | 233 | 17.6 | 12.8 | 4.8 | 301 | 22 | 376 |
| 241.14.16.051 | 16 | 8 | 51 | 14 | 11.5 | 3.3 | 8.2 | 161 | 15.8 | 7.6 | 8.2 | 221 | 20.4 | 14.8 | 5.6 | 286 | 25.5 | 357 |
| 241.14.16.064 | 16 | 8 | 64 | 10.7 | 14.4 | 4.2 | 10.2 | 154 | 19.8 | 9.6 | 10.2 | 212 | 25.6 | 18.6 | 7 | 274 | 32 | 342 |
| 241.14.16.076 | 16 | 8 | 76 | 9 | 17.1 | 4.9 | 12.2 | 154 | 23.6 | 11.4 | 12.2 | 212 | 30.4 | 22 | 8.4 | 274 | 38 | 342 |
| 241.14.16.089 | 16 | 8 | 89 | 7.3 | 20 | 5.8 | 14.2 | 146 | 27.6 | 13.4 | 14.2 | 201 | 35.6 | 25.8 | 9.8 | 260 | 44.5 | 325 |
| 241.14.16.102 | 16 | 8 | 102 | 6.8 | 23 | 6.6 | 16.3 | 156 | 31.6 | 15.3 | 16.3 | 215 | 40.8 | 29.6 | 11.2 | 277 | 51 | 347 |
| 241.14.16.305 | 16 | 8 | 305 | 2.3 | 68.6 | 19.8 | 48.8 | 158 | 94.6 | 45.8 | 48.8 | 217 | 122 | 88.4 | 33.6 | 281 | 152.5 | 351 |
| 241.14.20.025 | 20 | 10 | 25 | 55.8 | 5.6 | 1.6 | 4 | 314 | 7.8 | 3.8 | 4 | 432 | 10 | 7.2 | 2.8 | 558 | 12.5 | 698 |
| 241.14.20.032 | 20 | 10 | 32 | 45 | 7.2 | 2.1 | 5.1 | 324 | 9.9 | 4.8 | 5.1 | 446 | 12.8 | 9.3 | 3.5 | 576 | 16 | 720 |
| 241.14.20.038 | 20 | 10 | 38 | 36 | 8.6 | 2.5 | 6.1 | 308 | 11.8 | 5.7 | 6.1 | 424 | 15.2 | 11 | 4.2 | 547 | 19 | 684 |
| 241.14.20.044 | 20 | 10 | 44 | 30 | 9.9 | 2.9 | 7 | 297 | 13.6 | 6.6 | 7 | 409 | 17.6 | 12.8 | 4.8 | 528 | 22 | 660 |
| 241.14.20.051 | 20 | 10 | 51 | 24.5 | 11.5 | 3.3 | 8.2 | 281 | 15.8 | 7.6 | 8.2 | 387 | 20.4 | 14.8 | 5.6 | 500 | 25.5 | 625 |
| 241.14.20.064 | 20 | 10 | 64 | 19.2 | 14.4 | 4.2 | 10.2 | 276 | 19.8 | 9.6 | 10.2 | 381 | 25.6 | 18.6 | 7 | 492 | 32 | 614 |
| 241.14.20.076 | 20 | 10 | 76 | 16 | 17.1 | 4.9 | 12.2 | 274 | 23.6 | 11.4 | 12.2 | 377 | 30.4 | 22 | 8.4 | 486 | 38 | 608 |
| 241.14.20.089 | 20 | 10 | 89 | 14 | 20 | 5.8 | 14.2 | 280 | 27.6 | 13.4 | 14.2 | 386 | 35.6 | 25.8 | 9.8 | 498 | 44.5 | 623 |
| 241.14.20.102 | 20 | 10 | 102 | 12 | 23 | 6.6 | 16.3 | 275 | 31.6 | 15.3 | 16.3 | 379 | 40.8 | 29.6 | 11.2 | 490 | 51 | 612 |
| 241.14.20.115 | 20 | 10 | 115 | 10.9 | 25.9 | 7.5 | 18.4 | 282 | 35.6 | 17.2 | 18.4 | 389 | 46 | 33.4 | 12.6 | 501 | 57.5 | 627 |
| 241.14.20.127 | 20 | 10 | 127 | 9.5 | 28.6 | 8.3 | 20.3 | 271 | 39.4 | 19 | 20.3 | 374 | 50.8 | 36.8 | 14 | 483 | 63.5 | 603 |
| 241.14.20.139 | 20 | 10 | 139 | 8.4 | 31.3 | 9 | 22.2 | 263 | 43.1 | 20.8 | 22.2 | 362 | 55.6 | 40.3 | 15.3 | 467 | 69.5 | 584 |
| 241.14.20.152 | 20 | 10 | 152 | 7.6 | 34.2 | 9.9 | 24.3 | 260 | 47.1 | 22.8 | 24.3 | 358 | 60.8 | 44.1 | 16.7 | 462 | 76 | 578 |
| 241.14.20.305 | 20 | 10 | 305 | 4 | 68.6 | 19.8 | 48.8 | 274 | 94.6 | 45.8 | 48.8 | 378 | 122 | 88.4 | 33.6 | 488 | 152.5 | 610 |
| 241.14.25.025 | 25 | 12 | 25 | 105 | 5.6 | 1.6 | 4 | 591 | 7.8 | 3.8 | 4 | 814 | 10 | 7.2 | 2.8 | 1050 | 12.5 | 1312 |
| 241.14.25.032 | 25 | 12 | 32 | 80.3 | 7.2 | 2.1 | 5.1 | 578 | 9.9 | 4.8 | 5.1 | 797 | 12.8 | 9.3 | 3.5 | 1028 | 16 | 1285 |
| 241.14.25.038 | 25 | 12 | 38 | 62 | 8.6 | 2.5 | 6.1 | 530 | 11.8 | 5.7 | 6.1 | 730 | 15.2 | 11 | 4.2 | 942 | 19 | 1178 |
| 241.14.25.044 | 25 | 12 | 44 | 52.9 | 9.9 | 2.9 | 7 | 524 | 13.6 | 6.6 | 7 | 722 | 17.6 | 12.8 | 4.8 | 931 | 22 | 1164 |
| 241.14.25.051 | 25 | 12 | 51 | 44 | 11.5 | 3.3 | 8.2 | 505 | 15.8 | 7.6 | 8.2 | 696 | 20.4 | 14.8 | 5.6 | 898 | 25.5 | 1122 |
| 241.14.25.064 | 25 | 12 | 64 | 35.2 | 14.4 | 4.2 | 10.2 | 507 | 19.8 | 9.6 | 10.2 | 698 | 25.6 | 18.6 | 7 | 901 | 32 | 1126 |
| 241.14.25.076 | 25 | 12 | 76 | 28 | 17.1 | 4.9 | 12.2 | 479 | 23.6 | 11.4 | 12.2 | 660 | 30.4 | 22 | 8.4 | 851 | 38 | 1064 |
| 241.14.25.089 | 25 | 12 | 89 | 24 | 20 | 5.8 | 14.2 | 481 | 27.6 | 13.4 | 14.2 | 662 | 35.6 | 25.8 | 9.8 | 854 | 44.5 | 1068 |
| 241.14.25.102 | 25 | 12 | 102 | 21.1 | 23 | 6.6 | 16.3 | 484 | 31.6 | 15.3 | 16.3 | 667 | 40.8 | 29.6 | 11.2 | 861 | 51 | 1076 |
| 241.14.25.115 | 25 | 12 | 115 | 18.7 | 25.9 | 7.5 | 18.4 | 484 | 35.6 | 17.2 | 18.4 | 667 | 46 | 33.4 | 12.6 | 860 | 57.5 | 1075 |
| 241.14.25.127 | 25 | 12 | 127 | 16.7 | 28.6 | 8.3 | 20.3 | 477 | 39.4 | 19 | 20.3 | 657 | 50.8 | 36.8 | 14 | 848 | 63.5 | 1060 |
| 241.14.25.139 | 25 | 12 | 139 | 15.3 | 31.3 | 9 | 22.2 | 479 | 43.1 | 20.8 | 22.2 | 659 | 55.6 | 40.3 | 15.3 | 851 | 69.5 | 1063 |
| 241.14.25.152 | 25 | 12 | 152 | 14 | 34.2 | 9.9 | 24.3 | 479 | 47.1 | 22.8 | 24.3 | 660 | 60.8 | 44.1 | 16.7 | 851 | 76 | 1064 |
| 241.14.25.178 | 25 | 12 | 178 | 12.5 | 40 | 11.6 | 28.5 | 501 | 55.2 | 26.7 | 28.5 | 690 | 71.2 | 51.6 | 19.6 | 890 | 89 | 1112 |
| 241.14.25.203 | 25 | 12 | 203 | 10.4 | 45.7 | 13.2 | 32.5 | 475 | 62.9 | 30.4 | 32.5 | 654 | 81.2 | 58.9 | 22.3 | 844 | 101.5 | 1056 |
| 241.14.25.305 | 25 | 12 | 305 | 7 | 68.6 | 19.8 | 48.8 | 480 | 94.6 | 45.8 | 48.8 | 662 | 122 | 88.4 | 33.6 | 854 | 152.5 | 1068 |

# HIGH PERFORMANCE COMPRESSION SPRING, SF, COLOUR "GREEN", DIN ISO 10243

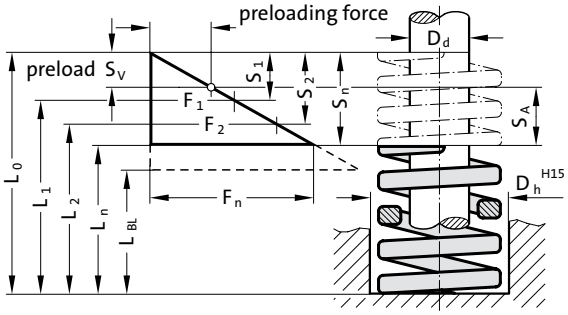


$D_h$ = dia. of guide sleeve
$D_d$ = diameter of guide pin
$L_0$ = free length of spring
$L_1...L_n$ = length of loaded spring (mm) as related to spring forces $F_1...F_n$
$L_{BL}$ = length of compacted spring (i.e. wire-to-wire)
$F_1...F_n$ = forces (N) as related to length of spring $L_1...L_n$
$S_{V1}...S_{V7}$ = recommend. preload. compression, as relat. to compress. $S_1...S_7$
$S_1...S_n$ = compr. as related to spring forces $F_1...F_n$
R = spring rate (N/mm)
$S_{A1}...S_{A7}$ = working stroke (mm)

## 241.14. High performance compression spring, SF, Colour "Green", DIN ISO 10243

| | | | | | 45% | | | | 62% | | | | 80% | | | | 100% | |
|---|---|---|---|---|---|---|---|---|---|---|---|---|---|---|---|---|---|---|
| Order No | $D_h$ | $D_d$ | $L_0$ | R | $S_1$ | $S_{V1}$ | $S_{A1}$ | $F_1$ | $S_2$ | $S_{V2}$ | $S_{A2}$ | $F_2$ | $S_3$ | $S_{V3}$ | $S_{A3}$ | $F_3$ | $S_n$ | $F_n$ |
| 241.14.32.038 | 32 | 16 | 38 | 98 | 8.6 | 2.5 | 6.1 | 838 | 11.8 | 5.7 | 6.1 | 1154 | 15.2 | 11 | 4.2 | 1490 | 19 | 1862 |
| 241.14.32.044 | 32 | 16 | 44 | 79.5 | 9.9 | 2.9 | 7 | 787 | 13.6 | 6.6 | 7 | 1084 | 17.6 | 12.8 | 4.8 | 1399 | 22 | 1749 |
| 241.14.32.051 | 32 | 16 | 51 | 67 | 11.5 | 3.3 | 8.2 | 769 | 15.8 | 7.6 | 8.2 | 1059 | 20.4 | 14.8 | 5.6 | 1367 | 25.5 | 1708 |
| 241.14.32.064 | 32 | 16 | 64 | 53 | 14.4 | 4.2 | 10.2 | 763 | 19.8 | 9.6 | 10.2 | 1052 | 25.6 | 18.6 | 7 | 1357 | 32 | 1696 |
| 241.14.32.076 | 32 | 16 | 76 | 44 | 17.1 | 4.9 | 12.2 | 752 | 23.6 | 11.4 | 12.2 | 1037 | 30.4 | 22 | 8.4 | 1338 | 38 | 1672 |
| 241.14.32.089 | 32 | 16 | 89 | 37.2 | 20 | 5.8 | 14.2 | 745 | 27.6 | 13.4 | 14.2 | 1026 | 35.6 | 25.8 | 9.8 | 1324 | 44.5 | 1655 |
| 241.14.32.102 | 32 | 16 | 102 | 32 | 23 | 6.6 | 16.3 | 734 | 31.6 | 15.3 | 16.3 | 1012 | 40.8 | 29.6 | 11.2 | 1306 | 51 | 1632 |
| 241.14.32.115 | 32 | 16 | 115 | 29 | 25.9 | 7.5 | 18.4 | 750 | 35.6 | 17.2 | 18.4 | 1034 | 46 | 33.4 | 12.6 | 1334 | 57.5 | 1668 |
| 241.14.32.127 | 32 | 16 | 127 | 25 | 28.6 | 8.3 | 20.3 | 714 | 39.4 | 19 | 20.3 | 984 | 50.8 | 36.8 | 14 | 1270 | 63.5 | 1588 |
| 241.14.32.139 | 32 | 16 | 139 | 23 | 31.3 | 9 | 22.2 | 719 | 43.1 | 20.8 | 22.2 | 991 | 55.6 | 40.3 | 15.3 | 1279 | 69.5 | 1598 |
| 241.14.32.152 | 32 | 16 | 152 | 21.5 | 34.2 | 9.9 | 24.3 | 735 | 47.1 | 22.8 | 24.3 | 1013 | 60.8 | 44.1 | 16.7 | 1307 | 76 | 1634 |
| 241.14.32.178 | 32 | 16 | 178 | 18.2 | 40 | 11.6 | 28.5 | 729 | 55.2 | 26.7 | 28.5 | 1004 | 71.2 | 51.6 | 19.6 | 1296 | 89 | 1620 |
| 241.14.32.203 | 32 | 16 | 203 | 15.8 | 45.7 | 13.2 | 32.5 | 722 | 62.9 | 30.4 | 32.5 | 994 | 81.2 | 58.9 | 22.3 | 1283 | 101.5 | 1604 |
| 241.14.32.254 | 32 | 16 | 254 | 12.5 | 57.4 | 16.6 | 40.8 | 717 | 79 | 38.2 | 40.8 | 988 | 102 | 74 | 28 | 1275 | 127.5 | 1594 |
| 241.14.32.305 | 32 | 16 | 305 | 10.3 | 68.6 | 19.8 | 48.8 | 707 | 94.6 | 45.8 | 48.8 | 974 | 122 | 88.4 | 33.6 | 1257 | 152.5 | 1571 |
| 241.14.40.051 | 40 | 20 | 51 | 92 | 11.5 | 3.3 | 8.2 | 1056 | 15.8 | 7.6 | 8.2 | 1455 | 20.4 | 14.8 | 5.6 | 1877 | 25.5 | 2346 |
| 241.14.40.064 | 40 | 20 | 64 | 76 | 14.4 | 4.2 | 10.2 | 1094 | 19.8 | 9.6 | 10.2 | 1508 | 25.6 | 18.6 | 7 | 1946 | 32 | 2432 |
| 241.14.40.076 | 40 | 20 | 76 | 63 | 17.1 | 4.9 | 12.2 | 1077 | 23.6 | 11.4 | 12.2 | 1484 | 30.4 | 22 | 8.4 | 1915 | 38 | 2394 |
| 241.14.40.089 | 40 | 20 | 89 | 51 | 20 | 5.8 | 14.2 | 1021 | 27.6 | 13.4 | 14.2 | 1407 | 35.6 | 25.8 | 9.8 | 1816 | 44.5 | 2270 |
| 241.14.40.102 | 40 | 20 | 102 | 45 | 23 | 6.6 | 16.3 | 1033 | 31.6 | 15.3 | 16.3 | 1423 | 40.8 | 29.6 | 11.2 | 1836 | 51 | 2295 |
| 241.14.40.115 | 40 | 20 | 115 | 39.6 | 25.9 | 7.5 | 18.4 | 1025 | 35.6 | 17.2 | 18.4 | 1412 | 46 | 33.4 | 12.6 | 1822 | 57.5 | 2277 |
| 241.14.40.127 | 40 | 20 | 127 | 36 | 28.6 | 8.3 | 20.3 | 1029 | 39.4 | 19 | 20.3 | 1417 | 50.8 | 36.8 | 14 | 1829 | 63.5 | 2286 |
| 241.14.40.139 | 40 | 20 | 139 | 32 | 31.3 | 9 | 22.2 | 1001 | 43.1 | 20.8 | 22.2 | 1379 | 55.6 | 40.3 | 15.3 | 1779 | 69.5 | 2224 |
| 241.14.40.152 | 40 | 20 | 152 | 28 | 34.2 | 9.9 | 24.3 | 958 | 47.1 | 22.8 | 24.3 | 1319 | 60.8 | 44.1 | 16.7 | 1702 | 76 | 2128 |
| 241.14.40.178 | 40 | 20 | 178 | 25.2 | 40 | 11.6 | 28.5 | 1009 | 55.2 | 26.7 | 28.5 | 1391 | 71.2 | 51.6 | 19.6 | 1794 | 89 | 2243 |
| 241.14.40.203 | 40 | 20 | 203 | 21.8 | 45.7 | 13.2 | 32.5 | 996 | 62.9 | 30.4 | 32.5 | 1372 | 81.2 | 58.9 | 22.3 | 1770 | 101.5 | 2213 |
| 241.14.40.254 | 40 | 20 | 254 | 17 | 57.4 | 16.6 | 40.8 | 975 | 79 | 38.2 | 40.8 | 1344 | 102 | 74 | 28 | 1734 | 127.5 | 2168 |
| 241.14.40.305 | 40 | 20 | 305 | 14.8 | 68.6 | 19.8 | 48.8 | 1016 | 94.6 | 45.8 | 48.8 | 1399 | 122 | 88.4 | 33.6 | 1806 | 152.5 | 2257 |
| 241.14.50.064 | 50 | 25 | 64 | 156 | 14.4 | 4.2 | 10.2 | 2246 | 19.8 | 9.6 | 10.2 | 3095 | 25.6 | 18.6 | 7 | 3994 | 32 | 4992 |
| 241.14.50.076 | 50 | 25 | 76 | 125 | 17.1 | 4.9 | 12.2 | 2138 | 23.6 | 11.4 | 12.2 | 2945 | 30.4 | 22 | 8.4 | 3800 | 38 | 4750 |
| 241.14.50.089 | 50 | 25 | 89 | 109 | 20 | 5.8 | 14.2 | 2183 | 27.6 | 13.4 | 14.2 | 3007 | 35.6 | 25.8 | 9.8 | 3880 | 44.5 | 4850 |
| 241.14.50.102 | 50 | 25 | 102 | 94 | 23 | 6.6 | 16.3 | 2157 | 31.6 | 15.3 | 16.3 | 2972 | 40.8 | 29.6 | 11.2 | 3835 | 51 | 4794 |
| 241.14.50.115 | 50 | 25 | 115 | 81 | 25.9 | 7.5 | 18.4 | 2096 | 35.6 | 17.2 | 18.4 | 2888 | 46 | 33.4 | 12.6 | 3726 | 57.5 | 4658 |
| 241.14.50.127 | 50 | 25 | 127 | 71 | 28.6 | 8.3 | 20.3 | 2029 | 39.4 | 19 | 20.3 | 2795 | 50.8 | 36.8 | 14 | 3607 | 63.5 | 4508 |
| 241.14.50.139 | 50 | 25 | 139 | 66.5 | 31.3 | 9 | 22.2 | 2080 | 43.1 | 20.8 | 22.2 | 2865 | 55.6 | 40.3 | 15.3 | 3697 | 69.5 | 4622 |
| 241.14.50.152 | 50 | 25 | 152 | 60 | 34.2 | 9.9 | 24.3 | 2052 | 47.1 | 22.8 | 24.3 | 2827 | 60.8 | 44.1 | 16.7 | 3648 | 76 | 4560 |
| 241.14.50.178 | 50 | 25 | 178 | 52 | 40 | 11.6 | 28.5 | 2083 | 55.2 | 26.7 | 28.5 | 2869 | 71.2 | 51.6 | 19.6 | 3702 | 89 | 4628 |
| 241.14.50.203 | 50 | 25 | 203 | 44 | 45.7 | 13.2 | 32.5 | 2010 | 62.9 | 30.4 | 32.5 | 2769 | 81.2 | 58.9 | 22.3 | 3573 | 101.5 | 4466 |
| 241.14.50.254 | 50 | 25 | 254 | 35 | 57.4 | 16.6 | 40.8 | 2008 | 79 | 38.2 | 40.8 | 2767 | 102 | 74 | 28 | 3570 | 127.5 | 4462 |
| 241.14.50.305 | 50 | 25 | 305 | 28.5 | 68.6 | 19.8 | 48.8 | 1956 | 94.6 | 45.8 | 48.8 | 2695 | 122 | 88.4 | 33.6 | 3477 | 152.5 | 4346 |
| 241.14.63.076 | 63 | 38 | 76 | 189 | 17.1 | 4.9 | 12.2 | 3232 | 23.6 | 11.4 | 12.2 | 4453 | 30.4 | 22 | 8.4 | 5746 | 38 | 7182 |
| 241.14.63.089 | 63 | 38 | 89 | 158 | 20 | 5.8 | 14.2 | 3164 | 27.6 | 13.4 | 14.2 | 4359 | 35.6 | 25.8 | 9.8 | 5625 | 44.5 | 7031 |
| 241.14.63.102 | 63 | 38 | 102 | 131 | 23 | 6.6 | 16.3 | 3006 | 31.6 | 15.3 | 16.3 | 4142 | 40.8 | 29.6 | 11.2 | 5345 | 51 | 6681 |
| 241.14.63.115 | 63 | 38 | 115 | 116 | 25.9 | 7.5 | 18.4 | 3002 | 35.6 | 17.2 | 18.4 | 4135 | 46 | 33.4 | 12.6 | 5336 | 57.5 | 6670 |
| 241.14.63.127 | 63 | 38 | 127 | 103 | 28.6 | 8.3 | 20.3 | 2943 | 39.4 | 19 | 20.3 | 4055 | 50.8 | 36.8 | 14 | 5232 | 63.5 | 6540 |
| 241.14.63.152 | 63 | 38 | 152 | 84.3 | 34.2 | 9.9 | 24.3 | 2883 | 47.1 | 22.8 | 24.3 | 3972 | 60.8 | 44.1 | 16.7 | 5125 | 76 | 6407 |
| 241.14.63.178 | 63 | 38 | 178 | 71.5 | 40 | 11.6 | 28.5 | 2864 | 55.2 | 26.7 | 28.5 | 3945 | 71.2 | 51.6 | 19.6 | 5091 | 89 | 6364 |
| 241.14.63.203 | 63 | 38 | 203 | 61.7 | 45.7 | 13.2 | 32.5 | 2818 | 62.9 | 30.4 | 32.5 | 3883 | 81.2 | 58.9 | 22.3 | 5010 | 101.5 | 6263 |
| 241.14.63.254 | 63 | 38 | 254 | 47 | 57.4 | 16.6 | 40.8 | 2697 | 79 | 38.2 | 40.8 | 3715 | 102 | 74 | 28 | 4794 | 127.5 | 5992 |
| 241.14.63.305 | 63 | 38 | 305 | 38.2 | 68.6 | 19.8 | 48.8 | 2621 | 94.6 | 45.8 | 48.8 | 3612 | 122 | 88.4 | 33.6 | 4660 | 152.5 | 5826 |

# HIGH PERFORMANCE COMPRESSION SPRING, MF, COLOUR "BLUE", DIN ISO 10243

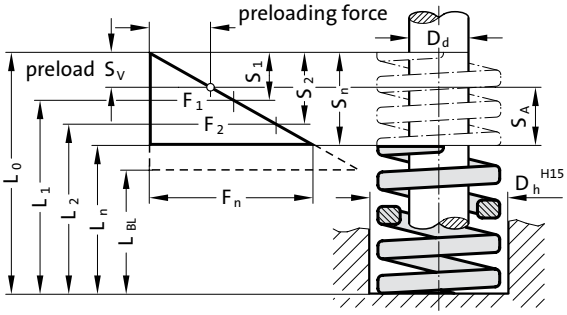


$D_h$ = dia. of guide sleeve
$D_d$ = diameter of guide pin
$L_0$ = free length of spring
$L_1...L_n$ = length of loaded spring (mm) as related to spring forces $F_1...F_n$
$L_{BL}$ = length of compacted spring (i.e. wire-to-wire)
$F_1...F_n$ = forces (N) as related to length of spring $L_1...L_n$
$S_{V1}...S_{V7}$ = recommend. preload. compression, as relat. to compress. $S_1...S_7$
$S_1...S_n$ = compr. as related to spring forces $F_1...F_n$
R = spring rate (N/mm)
$S_{A1}...S_{A7}$ = working stroke (mm)

## 241.15. High performance compression spring, MF, Colour "Blue", DIN ISO 10243

| | | | | | 45% | | | | 62% | | | | 80% | | | | | |
|---|---|---|---|---|---|---|---|---|---|---|---|---|---|---|---|---|---|---|
| Order No | $D_h$ | $D_d$ | $L_0$ | R | $S_1$ | $S_{V1}$ | $S_{A1}$ | $F_1$ | $S_2$ | $S_{V2}$ | $S_{A2}$ | $F_2$ | $S_3$ | $S_{V3}$ | $S_{A3}$ | $F_3$ | $S_n$ | $F_n$ |
| 241.15.10.025 | 10 | 5 | 25 | 16 | 5.3 | 1.5 | 3.8 | 85 | 7.3 | 3.5 | 3.8 | 117 | 9.4 | 6.8 | 2.6 | 151 | 11.8 | 189 |
| 241.15.10.032 | 10 | 5 | 32 | 13 | 6.8 | 2 | 4.8 | 88 | 9.3 | 4.5 | 4.8 | 121 | 12 | 8.7 | 3.3 | 156 | 15 | 195 |
| 241.15.10.038 | 10 | 5 | 38 | 11.9 | 8 | 2.3 | 5.7 | 95 | 11 | 5.3 | 5.7 | 131 | 14.2 | 10.3 | 3.9 | 169 | 17.8 | 212 |
| 241.15.10.044 | 10 | 5 | 44 | 10.3 | 9.3 | 2.7 | 6.6 | 95 | 12.8 | 6.2 | 6.6 | 132 | 16.5 | 11.9 | 4.5 | 170 | 20.6 | 212 |
| 241.15.10.051 | 10 | 5 | 51 | 8.9 | 10.8 | 3.1 | 7.6 | 96 | 14.8 | 7.2 | 7.6 | 132 | 19.1 | 13.9 | 5.3 | 170 | 23.9 | 213 |
| 241.15.10.064 | 10 | 5 | 64 | 7.5 | 13.5 | 3.9 | 9.6 | 101 | 18.6 | 9 | 9.6 | 140 | 24 | 17.4 | 6.6 | 180 | 30 | 225 |
| 241.15.10.076 | 10 | 5 | 76 | 6.2 | 16 | 4.6 | 11.4 | 99 | 22.1 | 10.7 | 11.4 | 137 | 28.5 | 20.6 | 7.8 | 177 | 35.6 | 221 |
| 241.15.10.305 | 10 | 5 | 305 | 1.6 | 64.1 | 18.5 | 45.6 | 103 | 88.4 | 42.8 | 45.6 | 141 | 114 | 82.6 | 31.4 | 182 | 142.5 | 228 |
| 241.15.13.025 | 12 | 6 | 25 | 30 | 5.3 | 1.5 | 3.8 | 159 | 7.3 | 3.5 | 3.8 | 219 | 9.4 | 6.8 | 2.6 | 283 | 11.8 | 354 |
| 241.15.13.032 | 12 | 6 | 32 | 24.8 | 6.8 | 2 | 4.8 | 167 | 9.3 | 4.5 | 4.8 | 231 | 12 | 8.7 | 3.3 | 298 | 15 | 372 |
| 241.15.13.038 | 12 | 6 | 38 | 21.4 | 8 | 2.3 | 5.7 | 171 | 11 | 5.3 | 5.7 | 236 | 14.2 | 10.3 | 3.9 | 305 | 17.8 | 381 |
| 241.15.13.044 | 12 | 6 | 44 | 18 | 9.3 | 2.7 | 6.6 | 167 | 12.8 | 6.2 | 6.6 | 230 | 16.5 | 11.9 | 4.5 | 297 | 20.6 | 371 |
| 241.15.13.051 | 12 | 6 | 51 | 15.5 | 10.8 | 3.1 | 7.6 | 167 | 14.8 | 7.2 | 7.6 | 230 | 19.1 | 13.9 | 5.3 | 296 | 23.9 | 370 |
| 241.15.13.064 | 12 | 6 | 64 | 12.1 | 13.5 | 3.9 | 9.6 | 163 | 18.6 | 9 | 9.6 | 225 | 24 | 17.4 | 6.6 | 290 | 30 | 363 |
| 241.15.13.076 | 12 | 6 | 76 | 10.2 | 16 | 4.6 | 11.4 | 163 | 22.1 | 10.7 | 11.4 | 225 | 28.5 | 20.6 | 7.8 | 290 | 35.6 | 363 |
| 241.15.13.089 | 12 | 6 | 89 | 8.4 | 18.7 | 5.4 | 13.3 | 157 | 25.8 | 12.5 | 13.3 | 217 | 33.3 | 24.1 | 9.2 | 280 | 41.6 | 349 |
| 241.15.13.305 | 12 | 6 | 305 | 2.4 | 64.1 | 18.5 | 45.6 | 154 | 88.4 | 42.8 | 45.6 | 212 | 114 | 82.6 | 31.4 | 274 | 142.5 | 342 |
| 241.15.16.025 | 16 | 8 | 25 | 49.4 | 5.3 | 1.5 | 3.8 | 262 | 7.3 | 3.5 | 3.8 | 361 | 9.4 | 6.8 | 2.6 | 466 | 11.8 | 583 |
| 241.15.16.032 | 16 | 8 | 32 | 38.5 | 6.8 | 2 | 4.8 | 260 | 9.3 | 4.5 | 4.8 | 358 | 12 | 8.7 | 3.3 | 462 | 15 | 578 |
| 241.15.16.038 | 16 | 8 | 38 | 33.9 | 8 | 2.3 | 5.7 | 272 | 11 | 5.3 | 5.7 | 374 | 14.2 | 10.3 | 3.9 | 483 | 17.8 | 603 |
| 241.15.16.044 | 16 | 8 | 44 | 30 | 9.3 | 2.7 | 6.6 | 278 | 12.8 | 6.2 | 6.6 | 383 | 16.5 | 11.9 | 4.5 | 494 | 20.6 | 618 |
| 241.15.16.051 | 16 | 8 | 51 | 26.4 | 10.8 | 3.1 | 7.6 | 284 | 14.8 | 7.2 | 7.6 | 391 | 19.1 | 13.9 | 5.3 | 505 | 23.9 | 631 |
| 241.15.16.064 | 16 | 8 | 64 | 20.5 | 13.5 | 3.9 | 9.6 | 277 | 18.6 | 9 | 9.6 | 381 | 24 | 17.4 | 6.6 | 492 | 30 | 615 |
| 241.15.16.076 | 16 | 8 | 76 | 17.8 | 16 | 4.6 | 11.4 | 285 | 22.1 | 10.7 | 11.4 | 393 | 28.5 | 20.6 | 7.8 | 507 | 35.6 | 634 |
| 241.15.16.089 | 16 | 8 | 89 | 15.2 | 18.7 | 5.4 | 13.3 | 285 | 25.8 | 12.5 | 13.3 | 392 | 33.3 | 24.1 | 9.2 | 506 | 41.6 | 632 |
| 241.15.16.102 | 16 | 8 | 102 | 13.5 | 21.5 | 6.2 | 15.3 | 290 | 29.6 | 14.3 | 15.3 | 400 | 38.2 | 27.7 | 10.5 | 516 | 47.8 | 645 |
| 241.15.16.305 | 16 | 8 | 305 | 4.3 | 64.1 | 18.5 | 45.6 | 276 | 88.4 | 42.8 | 45.6 | 380 | 114 | 82.6 | 31.4 | 490 | 142.5 | 613 |
| 241.15.20.025 | 20 | 10 | 25 | 98 | 5.3 | 1.5 | 3.8 | 520 | 7.3 | 3.5 | 3.8 | 717 | 9.4 | 6.8 | 2.6 | 925 | 11.8 | 1156 |
| 241.15.20.032 | 20 | 10 | 32 | 72.6 | 6.8 | 2 | 4.8 | 490 | 9.3 | 4.5 | 4.8 | 675 | 12 | 8.7 | 3.3 | 871 | 15 | 1089 |
| 241.15.20.038 | 20 | 10 | 38 | 56 | 8 | 2.3 | 5.7 | 449 | 11 | 5.3 | 5.7 | 618 | 14.2 | 10.3 | 3.9 | 797 | 17.8 | 997 |
| 241.15.20.044 | 20 | 10 | 44 | 47.5 | 9.3 | 2.7 | 6.6 | 440 | 12.8 | 6.2 | 6.6 | 607 | 16.5 | 11.9 | 4.5 | 783 | 20.6 | 978 |
| 241.15.20.051 | 20 | 10 | 51 | 41.7 | 10.8 | 3.1 | 7.6 | 448 | 14.8 | 7.2 | 7.6 | 618 | 19.1 | 13.9 | 5.3 | 797 | 23.9 | 997 |
| 241.15.20.064 | 20 | 10 | 64 | 32.3 | 13.5 | 3.9 | 9.6 | 436 | 18.6 | 9 | 9.6 | 601 | 24 | 17.4 | 6.6 | 775 | 30 | 969 |
| 241.15.20.076 | 20 | 10 | 76 | 25.1 | 16 | 4.6 | 11.4 | 402 | 22.1 | 10.7 | 11.4 | 554 | 28.5 | 20.6 | 7.8 | 715 | 35.6 | 894 |
| 241.15.20.089 | 20 | 10 | 89 | 22 | 18.7 | 5.4 | 13.3 | 412 | 25.8 | 12.5 | 13.3 | 567 | 33.3 | 24.1 | 9.2 | 732 | 41.6 | 915 |
| 241.15.20.102 | 20 | 10 | 102 | 19.8 | 21.5 | 6.2 | 15.3 | 426 | 29.6 | 14.3 | 15.3 | 587 | 38.2 | 27.7 | 10.5 | 757 | 47.8 | 946 |
| 241.15.20.115 | 20 | 10 | 115 | 18.1 | 24.3 | 7 | 17.2 | 439 | 33.4 | 16.2 | 17.2 | 605 | 43.1 | 31.3 | 11.9 | 780 | 53.9 | 976 |
| 241.15.20.127 | 20 | 10 | 127 | 16.6 | 26.8 | 7.7 | 19 | 444 | 36.9 | 17.8 | 19 | 612 | 47.6 | 34.5 | 13.1 | 790 | 59.5 | 988 |
| 241.15.20.139 | 20 | 10 | 139 | 15.1 | 29.3 | 8.5 | 20.8 | 442 | 40.4 | 19.5 | 20.8 | 609 | 52.1 | 37.8 | 14.3 | 786 | 65.1 | 983 |
| 241.15.20.152 | 20 | 10 | 152 | 13.2 | 32.1 | 9.3 | 22.8 | 424 | 44.2 | 21.4 | 22.8 | 584 | 57 | 41.4 | 15.7 | 753 | 71.3 | 941 |
| 241.15.20.305 | 20 | 10 | 305 | 6.1 | 64.1 | 18.5 | 45.6 | 391 | 88.4 | 42.8 | 45.6 | 539 | 114 | 82.6 | 31.4 | 695 | 142.5 | 869 |
| 241.15.25.025 | 25 | 12 | 25 | 157 | 5.3 | 1.5 | 3.8 | 834 | 7.3 | 3.5 | 3.8 | 1149 | 9.4 | 6.8 | 2.6 | 1482 | 11.8 | 1853 |
| 241.15.25.032 | 25 | 12 | 32 | 118 | 6.8 | 2 | 4.8 | 796 | 9.3 | 4.5 | 4.8 | 1097 | 12 | 8.7 | 3.3 | 1416 | 15 | 1770 |
| 241.15.25.038 | 25 | 12 | 38 | 93 | 8 | 2.3 | 5.7 | 745 | 11 | 5.3 | 5.7 | 1026 | 14.2 | 10.3 | 3.9 | 1324 | 17.8 | 1655 |
| 241.15.25.044 | 25 | 12 | 44 | 80.8 | 9.3 | 2.7 | 6.6 | 749 | 12.8 | 6.2 | 6.6 | 1032 | 16.5 | 11.9 | 4.5 | 1332 | 20.6 | 1664 |
| 241.15.25.051 | 25 | 12 | 51 | 68.6 | 10.8 | 3.1 | 7.6 | 738 | 14.8 | 7.2 | 7.6 | 1017 | 19.1 | 13.9 | 5.3 | 1312 | 23.9 | 1640 |
| 241.15.25.064 | 25 | 12 | 64 | 53 | 13.5 | 3.9 | 9.6 | 716 | 18.6 | 9 | 9.6 | 986 | 24 | 17.4 | 6.6 | 1272 | 30 | 1590 |
| 241.15.25.076 | 25 | 12 | 76 | 43.2 | 16 | 4.6 | 11.4 | 692 | 22.1 | 10.7 | 11.4 | 954 | 28.5 | 20.6 | 7.8 | 1230 | 35.6 | 1538 |
| 241.15.25.089 | 25 | 12 | 89 | 38.2 | 18.7 | 5.4 | 13.3 | 715 | 25.8 | 12.5 | 13.3 | 985 | 33.3 | 24.1 | 9.2 | 1271 | 41.6 | 1589 |
| 241.15.25.102 | 25 | 12 | 102 | 33 | 21.5 | 6.2 | 15.3 | 710 | 29.6 | 14.3 | 15.3 | 978 | 38.2 | 27.7 | 10.5 | 1262 | 47.8 | 1577 |
| 241.15.25.115 | 25 | 12 | 115 | 28 | 24.3 | 7 | 17.2 | 679 | 33.4 | 16.2 | 17.2 | 936 | 43.1 | 31.3 | 11.9 | 1207 | 53.9 | 1509 |
| 241.15.25.127 | 25 | 12 | 127 | 25.9 | 26.8 | 7.7 | 19 | 693 | 36.9 | 17.8 | 19 | 955 | 47.6 | 34.5 | 13.1 | 1233 | 59.5 | 1541 |
| 241.15.25.139 | 25 | 12 | 139 | 23.2 | 29.3 | 8.5 | 20.8 | 680 | 40.4 | 19.5 | 20.8 | 936 | 52.1 | 37.8 | 14.3 | 1208 | 65.1 | 1510 |
| 241.15.25.152 | 25 | 12 | 152 | 20.8 | 32.1 | 9.3 | 22.8 | 667 | 44.2 | 21.4 | 22.8 | 919 | 57 | 41.4 | 15.7 | 1186 | 71.3 | 1483 |
| 241.15.25.178 | 25 | 12 | 178 | 17.8 | 37.5 | 10.8 | 26.7 | 668 | 51.7 | 25 | 26.7 | 920 | 66.7 | 48.4 | 18.3 | 1188 | 83.4 | 1485 |
| 241.15.25.203 | 25 | 12 | 203 | 15.8 | 42.8 | 12.4 | 30.4 | 676 | 59 | 28.5 | 30.4 | 932 | 76.1 | 55.2 | 20.9 | 1202 | 95.1 | 1503 |
| 241.15.25.305 | 25 | 12 | 305 | 10.2 | 64.1 | 18.5 | 45.6 | 654 | 88.4 | 42.8 | 45.6 | 901 | 114 | 82.6 | 31.4 | 1163 | 142.5 | 1454 |

# HIGH PERFORMANCE COMPRESSION SPRING, MF, COLOUR "BLUE", DIN ISO 10243

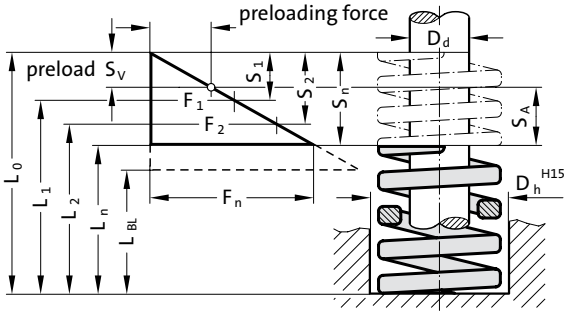


$D_h$ = dia. of guide sleeve
$D_d$ = diameter of guide pin
$L_0$ = free length of spring
$L_1...L_n$ = length of loaded spring (mm) as related to spring forces $F_1...F_n$
$L_{BL}$ = length of compacted spring (i.e. wire-to-wire)
$F_1...F_n$ = forces (N) as related to length of spring $L_1...L_n$
$S_{V1}...S_{V7}$ = recommend. preload. compression, as relat. to compress. $S_1...S_7$
$S_1...S_n$ = compr. as related to spring forces $F_1...F_n$
R = spring rate (N/mm)
$S_{A1}...S_{A7}$ = working stroke (mm)

## 241.15. High performance compression spring, MF, Colour "Blue", DIN ISO 10243

| | | | | | 45% | | | | 62% | | | | 80% | | | | | |
|---|---|---|---|---|---|---|---|---|---|---|---|---|---|---|---|---|---|---|
| Order No | $D_h$ | $D_d$ | $L_0$ | R | $S_1$ | $S_{V1}$ | $S_{A1}$ | $F_1$ | $S_2$ | $S_{V2}$ | $S_{A2}$ | $F_2$ | $S_3$ | $S_{V3}$ | $S_{A3}$ | $F_3$ | $S_n$ | $F_n$ |
| 241.15.32.038 | 32 | 16 | 38 | 185 | 8 | 2.3 | 5.7 | 1482 | 11 | 5.3 | 5.7 | 2042 | 14.2 | 10.3 | 3.9 | 2634 | 17.8 | 3293 |
| 241.15.32.044 | 32 | 16 | 44 | 158 | 9.3 | 2.7 | 6.6 | 1465 | 12.8 | 6.2 | 6.6 | 2018 | 16.5 | 11.9 | 4.5 | 2604 | 20.6 | 3255 |
| 241.15.32.051 | 32 | 16 | 51 | 134 | 10.8 | 3.1 | 7.6 | 1441 | 14.8 | 7.2 | 7.6 | 1986 | 19.1 | 13.9 | 5.3 | 2562 | 23.9 | 3203 |
| 241.15.32.064 | 32 | 16 | 64 | 99 | 13.5 | 3.9 | 9.6 | 1336 | 18.6 | 9 | 9.6 | 1841 | 24 | 17.4 | 6.6 | 2376 | 30 | 2970 |
| 241.15.32.076 | 32 | 16 | 76 | 80.5 | 16 | 4.6 | 11.4 | 1290 | 22.1 | 10.7 | 11.4 | 1777 | 28.5 | 20.6 | 7.8 | 2293 | 35.6 | 2866 |
| 241.15.32.089 | 32 | 16 | 89 | 69.1 | 18.7 | 5.4 | 13.3 | 1294 | 25.8 | 12.5 | 13.3 | 1782 | 33.3 | 24.1 | 9.2 | 2300 | 41.6 | 2875 |
| 241.15.32.102 | 32 | 16 | 102 | 58.8 | 21.5 | 6.2 | 15.3 | 1265 | 29.6 | 14.3 | 15.3 | 1743 | 38.2 | 27.7 | 10.5 | 2249 | 47.8 | 2811 |
| 241.15.32.115 | 32 | 16 | 115 | 51.5 | 24.3 | 7 | 17.2 | 1249 | 33.4 | 16.2 | 17.2 | 1721 | 43.1 | 31.3 | 11.9 | 2221 | 53.9 | 2776 |
| 241.15.32.127 | 32 | 16 | 127 | 44.8 | 26.8 | 7.7 | 19 | 1200 | 36.9 | 17.8 | 19 | 1653 | 47.6 | 34.5 | 13.1 | 2132 | 59.5 | 2666 |
| 241.15.32.139 | 32 | 16 | 139 | 42.3 | 29.3 | 8.5 | 20.8 | 1239 | 40.4 | 19.5 | 20.8 | 1707 | 52.1 | 37.8 | 14.3 | 2203 | 65.1 | 2754 |
| 241.15.32.152 | 32 | 16 | 152 | 37.8 | 32.1 | 9.3 | 22.8 | 1213 | 44.2 | 21.4 | 22.8 | 1671 | 57 | 41.4 | 15.7 | 2156 | 71.3 | 2695 |
| 241.15.32.178 | 32 | 16 | 178 | 32.5 | 37.5 | 10.8 | 26.7 | 1220 | 51.7 | 25 | 26.7 | 1681 | 66.7 | 48.4 | 18.3 | 2168 | 83.4 | 2710 |
| 241.15.32.203 | 32 | 16 | 203 | 28.9 | 42.8 | 12.4 | 30.4 | 1237 | 59 | 28.5 | 30.4 | 1704 | 76.1 | 55.2 | 20.9 | 2199 | 95.1 | 2748 |
| 241.15.32.254 | 32 | 16 | 254 | 22.2 | 53.6 | 15.5 | 38.1 | 1189 | 73.8 | 35.7 | 38.1 | 1638 | 95.2 | 69 | 26.2 | 2113 | 119 | 2642 |
| 241.15.32.305 | 32 | 16 | 305 | 18.3 | 64.1 | 18.5 | 45.6 | 1173 | 88.4 | 42.8 | 45.6 | 1617 | 114 | 82.6 | 31.4 | 2086 | 142.5 | 2608 |
| 241.15.40.051 | 40 | 20 | 51 | 182 | 10.8 | 3.1 | 7.6 | 1957 | 14.8 | 7.2 | 7.6 | 2697 | 19.1 | 13.9 | 5.3 | 3480 | 23.9 | 4350 |
| 241.15.40.064 | 40 | 20 | 64 | 140 | 13.5 | 3.9 | 9.6 | 1890 | 18.6 | 9 | 9.6 | 2604 | 24 | 17.4 | 6.6 | 3360 | 30 | 4200 |
| 241.15.40.076 | 40 | 20 | 76 | 108 | 16 | 4.6 | 11.4 | 1730 | 22.1 | 10.7 | 11.4 | 2384 | 28.5 | 20.6 | 7.8 | 3076 | 35.6 | 3845 |
| 241.15.40.089 | 40 | 20 | 89 | 90.7 | 18.7 | 5.4 | 13.3 | 1698 | 25.8 | 12.5 | 13.3 | 2339 | 33.3 | 24.1 | 9.2 | 3018 | 41.6 | 3773 |
| 241.15.40.102 | 40 | 20 | 102 | 81 | 21.5 | 6.2 | 15.3 | 1742 | 29.6 | 14.3 | 15.3 | 2401 | 38.2 | 27.7 | 10.5 | 3097 | 47.8 | 3872 |
| 241.15.40.115 | 40 | 20 | 115 | 71.8 | 24.3 | 7 | 17.2 | 1742 | 33.4 | 16.2 | 17.2 | 2399 | 43.1 | 31.3 | 11.9 | 3096 | 53.9 | 3870 |
| 241.15.40.127 | 40 | 20 | 127 | 62.7 | 26.8 | 7.7 | 19 | 1679 | 36.9 | 17.8 | 19 | 2313 | 47.6 | 34.5 | 13.1 | 2985 | 59.5 | 3731 |
| 241.15.40.139 | 40 | 20 | 139 | 57.5 | 29.3 | 8.5 | 20.8 | 1684 | 40.4 | 19.5 | 20.8 | 2321 | 52.1 | 37.8 | 14.3 | 2995 | 65.1 | 3743 |
| 241.15.40.152 | 40 | 20 | 152 | 51.6 | 32.1 | 9.3 | 22.8 | 1656 | 44.2 | 21.4 | 22.8 | 2281 | 57 | 41.4 | 15.7 | 2943 | 71.3 | 3679 |
| 241.15.40.178 | 40 | 20 | 178 | 44.1 | 37.5 | 10.8 | 26.7 | 1655 | 51.7 | 25 | 26.7 | 2280 | 66.7 | 48.4 | 18.3 | 2942 | 83.4 | 3678 |
| 241.15.40.203 | 40 | 20 | 203 | 36.7 | 42.8 | 12.4 | 30.4 | 1571 | 59 | 28.5 | 30.4 | 2164 | 76.1 | 55.2 | 20.9 | 2792 | 95.1 | 3490 |
| 241.15.40.254 | 40 | 20 | 254 | 30.1 | 53.6 | 15.5 | 38.1 | 1612 | 73.8 | 35.7 | 38.1 | 2221 | 95.2 | 69 | 26.2 | 2866 | 119 | 3582 |
| 241.15.40.305 | 40 | 20 | 305 | 24.6 | 64.1 | 18.5 | 45.6 | 1577 | 88.4 | 42.8 | 45.6 | 2173 | 114 | 82.6 | 31.4 | 2804 | 142.5 | 3506 |
| 241.15.50.064 | 50 | 25 | 64 | 209 | 13.5 | 3.9 | 9.6 | 2822 | 18.6 | 9 | 9.6 | 3887 | 24 | 17.4 | 6.6 | 5016 | 30 | 6270 |
| 241.15.50.076 | 50 | 25 | 76 | 168 | 16 | 4.6 | 11.4 | 2691 | 22.1 | 10.7 | 11.4 | 3708 | 28.5 | 20.6 | 7.8 | 4785 | 35.6 | 5981 |
| 241.15.50.089 | 50 | 25 | 89 | 140 | 18.7 | 5.4 | 13.3 | 2621 | 25.8 | 12.5 | 13.3 | 3611 | 33.3 | 24.1 | 9.2 | 4659 | 41.6 | 5824 |
| 241.15.50.102 | 50 | 25 | 102 | 119 | 21.5 | 6.2 | 15.3 | 2560 | 29.6 | 14.3 | 15.3 | 3527 | 38.2 | 27.7 | 10.5 | 4551 | 47.8 | 5688 |
| 241.15.50.115 | 50 | 25 | 115 | 106 | 24.3 | 7 | 17.2 | 2571 | 33.4 | 16.2 | 17.2 | 3542 | 43.1 | 31.3 | 11.9 | 4571 | 53.9 | 5713 |
| 241.15.50.127 | 50 | 25 | 127 | 97 | 26.8 | 7.7 | 19 | 2597 | 36.9 | 17.8 | 19 | 3578 | 47.6 | 34.5 | 13.1 | 4617 | 59.5 | 5772 |
| 241.15.50.139 | 50 | 25 | 139 | 87 | 29.3 | 8.5 | 20.8 | 2549 | 40.4 | 19.5 | 20.8 | 3511 | 52.1 | 37.8 | 14.3 | 4531 | 65.1 | 5664 |
| 241.15.50.152 | 50 | 25 | 152 | 80 | 32.1 | 9.3 | 22.8 | 2567 | 44.2 | 21.4 | 22.8 | 3536 | 57 | 41.4 | 15.7 | 4563 | 71.3 | 5704 |
| 241.15.50.178 | 50 | 25 | 178 | 69.5 | 37.5 | 10.8 | 26.7 | 2608 | 51.7 | 25 | 26.7 | 3594 | 66.7 | 48.4 | 18.3 | 4637 | 83.4 | 5796 |
| 241.15.50.203 | 50 | 25 | 203 | 59.8 | 42.8 | 12.4 | 30.4 | 2559 | 59 | 28.5 | 30.4 | 3526 | 76.1 | 55.2 | 20.9 | 4550 | 95.1 | 5687 |
| 241.15.50.229 | 50 | 25 | 229 | 50.9 | 48.3 | 13.9 | 34.3 | 2458 | 66.5 | 32.2 | 34.3 | 3386 | 85.8 | 62.2 | 23.6 | 4369 | 107.3 | 5462 |
| 241.15.50.254 | 50 | 25 | 254 | 46 | 53.6 | 15.5 | 38.1 | 2463 | 73.8 | 35.7 | 38.1 | 3394 | 95.2 | 69 | 26.2 | 4379 | 119 | 5474 |
| 241.15.50.305 | 50 | 25 | 305 | 38.6 | 64.1 | 18.5 | 45.6 | 2475 | 88.4 | 42.8 | 45.6 | 3410 | 114 | 82.6 | 31.4 | 4400 | 142.5 | 5500 |
| 241.15.63.076 | 63 | 38 | 76 | 320 | 16 | 4.6 | 11.4 | 5126 | 22.1 | 10.7 | 11.4 | 7063 | 28.5 | 20.6 | 7.8 | 9114 | 35.6 | 11392 |
| 241.15.63.089 | 63 | 38 | 89 | 260 | 18.7 | 5.4 | 13.3 | 4867 | 25.8 | 12.5 | 13.3 | 6706 | 33.3 | 24.1 | 9.2 | 8653 | 41.6 | 10816 |
| 241.15.63.102 | 63 | 38 | 102 | 221 | 21.5 | 6.2 | 15.3 | 4754 | 29.6 | 14.3 | 15.3 | 6550 | 38.2 | 27.7 | 10.5 | 8451 | 47.8 | 10564 |
| 241.15.63.115 | 63 | 38 | 115 | 187 | 24.3 | 7 | 17.2 | 4536 | 33.4 | 16.2 | 17.2 | 6249 | 43.1 | 31.3 | 11.9 | 8063 | 53.9 | 10079 |
| 241.15.63.127 | 63 | 38 | 127 | 168 | 26.8 | 7.7 | 19 | 4498 | 36.9 | 17.8 | 19 | 6198 | 47.6 | 34.5 | 13.1 | 7997 | 59.5 | 9996 |
| 241.15.63.152 | 63 | 38 | 152 | 136 | 32.1 | 9.3 | 22.8 | 4364 | 44.2 | 21.4 | 22.8 | 6012 | 57 | 41.4 | 15.7 | 7757 | 71.3 | 9697 |
| 241.15.63.178 | 63 | 38 | 178 | 114 | 37.5 | 10.8 | 26.7 | 4278 | 51.7 | 25 | 26.7 | 5895 | 66.7 | 48.4 | 18.3 | 7606 | 83.4 | 9508 |
| 241.15.63.203 | 63 | 38 | 203 | 100 | 42.8 | 12.4 | 30.4 | 4280 | 59 | 28.5 | 30.4 | 5896 | 76.1 | 55.2 | 20.9 | 7608 | 95.1 | 9510 |
| 241.15.63.229 | 63 | 38 | 229 | 89.2 | 48.3 | 13.9 | 34.3 | 4307 | 66.5 | 32.2 | 34.3 | 5934 | 85.8 | 62.2 | 23.6 | 7657 | 107.3 | 9571 |
| 241.15.63.254 | 63 | 38 | 254 | 78.4 | 53.6 | 15.5 | 38.1 | 4198 | 73.8 | 35.7 | 38.1 | 5784 | 95.2 | 69 | 26.2 | 7464 | 119 | 9330 |
| 241.15.63.305 | 63 | 38 | 305 | 64.7 | 64.1 | 18.5 | 45.6 | 4149 | 88.4 | 42.8 | 45.6 | 5716 | 114 | 82.6 | 31.4 | 7376 | 142.5 | 9220 |

# HIGH PERFORMANCE COMPRESSION SPRING, LF, COLOUR "RED", DIN ISO 10243

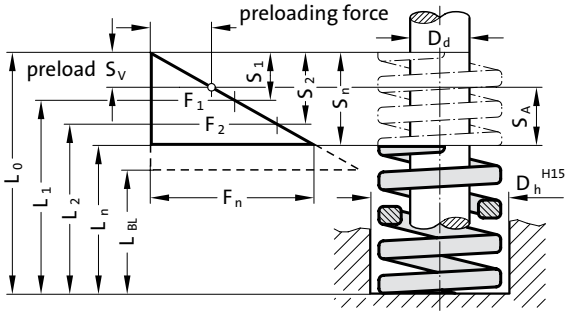


$D_h$ = dia. of guide sleeve
$D_d$ = diameter of guide pin
$L_0$ = free length of spring
$L_1...L_n$ = length of loaded spring (mm) as related to spring forces $F_1...F_n$
$L_{BL}$ = length of compacted spring (i.e. wire-to-wire)
$F_1...F_n$ = forces (N) as related to length of spring $L_1...L_n$
$S_{V1}...S_{V7}$ = recommend. preload. compression, as relat. to compress. $S_1...S_7$
$S_1...S_n$ = compr. as related to spring forces $F_1...F_n$
R = spring rate (N/mm)
$S_{A1}...S_{A7}$ = working stroke (mm)

## 241.16. High performance compression spring, LF, Colour "Red", DIN ISO 10243

| | | | | | | | | | 62% | | | | 80% | | | | | |
|---|---|---|---|---|---|---|---|---|---|---|---|---|---|---|---|---|---|---|
| Order No | $D_h$ | $D_d$ | $L_0$ | R | $S_1$ | $S_{V1}$ | $S_{A1}$ | $F_1$ | $S_2$ | $S_{V2}$ | $S_{A2}$ | $F_2$ | $S_3$ | $S_{V3}$ | $S_{A3}$ | $F_3$ | $S_n$ | $F_n$ |
| 241.16.10.025 | 10 | 5 | 25 | 23 | 4.2 | 1.2 | 3 | 97 | 5.8 | 2.8 | 3 | 134 | 7.5 | 5.5 | 2.1 | 173 | 9.4 | 216 |
| 241.16.10.032 | 10 | 5 | 32 | 17.5 | 5.4 | 1.6 | 3.8 | 94 | 7.4 | 3.6 | 3.8 | 130 | 9.6 | 7 | 2.6 | 168 | 12 | 210 |
| 241.16.10.038 | 10 | 5 | 38 | 14.8 | 6.4 | 1.9 | 4.6 | 95 | 8.9 | 4.3 | 4.6 | 131 | 11.4 | 8.3 | 3.1 | 169 | 14.3 | 212 |
| 241.16.10.044 | 10 | 5 | 44 | 13 | 7.4 | 2.1 | 5.3 | 97 | 10.2 | 5 | 5.3 | 133 | 13.2 | 9.6 | 3.6 | 172 | 16.5 | 214 |
| 241.16.10.051 | 10 | 5 | 51 | 11.2 | 8.6 | 2.5 | 6.1 | 96 | 11.8 | 5.7 | 6.1 | 133 | 15.3 | 11.1 | 4.2 | 171 | 19.1 | 214 |
| 241.16.10.064 | 10 | 5 | 64 | 9.2 | 10.8 | 3.1 | 7.7 | 99 | 14.9 | 7.2 | 7.7 | 137 | 19.2 | 13.9 | 5.3 | 177 | 24 | 221 |
| 241.16.10.076 | 10 | 5 | 76 | 7.5 | 12.8 | 3.7 | 9.1 | 96 | 17.7 | 8.6 | 9.1 | 133 | 22.8 | 16.5 | 6.3 | 171 | 28.5 | 214 |
| 241.16.10.305 | 10 | 5 | 305 | 1.9 | 51.5 | 14.9 | 36.6 | 98 | 70.9 | 34.3 | 36.6 | 135 | 91.5 | 66.4 | 25.2 | 174 | 114.4 | 217 |
| 241.16.13.025 | 12 | 6 | 25 | 42.1 | 4.2 | 1.2 | 3 | 178 | 5.8 | 2.8 | 3 | 245 | 7.5 | 5.5 | 2.1 | 317 | 9.4 | 396 |
| 241.16.13.032 | 12 | 6 | 32 | 33.2 | 5.4 | 1.6 | 3.8 | 179 | 7.4 | 3.6 | 3.8 | 247 | 9.6 | 7 | 2.6 | 319 | 12 | 398 |
| 241.16.13.038 | 12 | 6 | 38 | 29.3 | 6.4 | 1.9 | 4.6 | 189 | 8.9 | 4.3 | 4.6 | 260 | 11.4 | 8.3 | 3.1 | 335 | 14.3 | 419 |
| 241.16.13.044 | 12 | 6 | 44 | 24.6 | 7.4 | 2.1 | 5.3 | 183 | 10.2 | 5 | 5.3 | 252 | 13.2 | 9.6 | 3.6 | 325 | 16.5 | 406 |
| 241.16.13.051 | 12 | 6 | 51 | 19.6 | 8.6 | 2.5 | 6.1 | 168 | 11.8 | 5.7 | 6.1 | 232 | 15.3 | 11.1 | 4.2 | 299 | 19.1 | 374 |
| 241.16.13.064 | 12 | 6 | 64 | 15 | 10.8 | 3.1 | 7.7 | 162 | 14.9 | 7.2 | 7.7 | 223 | 19.2 | 13.9 | 5.3 | 288 | 24 | 360 |
| 241.16.13.076 | 12 | 6 | 76 | 13.2 | 12.8 | 3.7 | 9.1 | 169 | 17.7 | 8.6 | 9.1 | 233 | 22.8 | 16.5 | 6.3 | 301 | 28.5 | 376 |
| 241.16.13.089 | 12 | 6 | 89 | 11.4 | 15 | 4.3 | 10.7 | 171 | 20.7 | 10 | 10.7 | 236 | 26.7 | 19.4 | 7.3 | 305 | 33.4 | 381 |
| 241.16.13.305 | 12 | 6 | 305 | 3.2 | 51.5 | 14.9 | 36.6 | 165 | 70.9 | 34.3 | 36.6 | 227 | 91.5 | 66.4 | 25.2 | 293 | 114.4 | 366 |
| 241.16.16.025 | 16 | 8 | 25 | 75.7 | 4.2 | 1.2 | 3 | 320 | 5.8 | 2.8 | 3 | 441 | 7.5 | 5.5 | 2.1 | 569 | 9.4 | 712 |
| 241.16.16.032 | 16 | 8 | 32 | 60.2 | 5.4 | 1.6 | 3.8 | 325 | 7.4 | 3.6 | 3.8 | 448 | 9.6 | 7 | 2.6 | 578 | 12 | 722 |
| 241.16.16.038 | 16 | 8 | 38 | 50.8 | 6.4 | 1.9 | 4.6 | 327 | 8.9 | 4.3 | 4.6 | 450 | 11.4 | 8.3 | 3.1 | 581 | 14.3 | 726 |
| 241.16.16.044 | 16 | 8 | 44 | 42.8 | 7.4 | 2.1 | 5.3 | 318 | 10.2 | 5 | 5.3 | 438 | 13.2 | 9.6 | 3.6 | 565 | 16.5 | 706 |
| 241.16.16.051 | 16 | 8 | 51 | 37.1 | 8.6 | 2.5 | 6.1 | 319 | 11.8 | 5.7 | 6.1 | 439 | 15.3 | 11.1 | 4.2 | 567 | 19.1 | 709 |
| 241.16.16.064 | 16 | 8 | 64 | 30.3 | 10.8 | 3.1 | 7.7 | 327 | 14.9 | 7.2 | 7.7 | 451 | 19.2 | 13.9 | 5.3 | 582 | 24 | 727 |
| 241.16.16.076 | 16 | 8 | 76 | 25.7 | 12.8 | 3.7 | 9.1 | 330 | 17.7 | 8.6 | 9.1 | 454 | 22.8 | 16.5 | 6.3 | 586 | 28.5 | 732 |
| 241.16.16.089 | 16 | 8 | 89 | 21.7 | 15 | 4.3 | 10.7 | 326 | 20.7 | 10 | 10.7 | 449 | 26.7 | 19.4 | 7.3 | 580 | 33.4 | 725 |
| 241.16.16.102 | 16 | 8 | 102 | 18.9 | 17.2 | 5 | 12.3 | 326 | 23.7 | 11.5 | 12.3 | 449 | 30.6 | 22.2 | 8.4 | 579 | 38.3 | 724 |
| 241.16.16.305 | 16 | 8 | 305 | 6.3 | 51.5 | 14.9 | 36.6 | 324 | 70.9 | 34.3 | 36.6 | 447 | 91.5 | 66.4 | 25.2 | 577 | 114.4 | 721 |
| 241.16.20.025 | 20 | 10 | 25 | 216 | 4.2 | 1.2 | 3 | 914 | 5.8 | 2.8 | 3 | 1259 | 7.5 | 5.5 | 2.1 | 1624 | 9.4 | 2030 |
| 241.16.20.032 | 20 | 10 | 32 | 168 | 5.4 | 1.6 | 3.8 | 907 | 7.4 | 3.6 | 3.8 | 1250 | 9.6 | 7 | 2.6 | 1613 | 12 | 2016 |
| 241.16.20.038 | 20 | 10 | 38 | 129 | 6.4 | 1.9 | 4.6 | 830 | 8.9 | 4.3 | 4.6 | 1144 | 11.4 | 8.3 | 3.1 | 1476 | 14.3 | 1845 |
| 241.16.20.044 | 20 | 10 | 44 | 112 | 7.4 | 2.1 | 5.3 | 832 | 10.2 | 5 | 5.3 | 1146 | 13.2 | 9.6 | 3.6 | 1478 | 16.5 | 1848 |
| 241.16.20.051 | 20 | 10 | 51 | 94 | 8.6 | 2.5 | 6.1 | 808 | 11.8 | 5.7 | 6.1 | 1113 | 15.3 | 11.1 | 4.2 | 1436 | 19.1 | 1795 |
| 241.16.20.064 | 20 | 10 | 64 | 72.1 | 10.8 | 3.1 | 7.7 | 779 | 14.9 | 7.2 | 7.7 | 1073 | 19.2 | 13.9 | 5.3 | 1384 | 24 | 1730 |
| 241.16.20.076 | 20 | 10 | 76 | 59.7 | 12.8 | 3.7 | 9.1 | 766 | 17.7 | 8.6 | 9.1 | 1055 | 22.8 | 16.5 | 6.3 | 1361 | 28.5 | 1701 |
| 241.16.20.089 | 20 | 10 | 89 | 50.5 | 15 | 4.3 | 10.7 | 759 | 20.7 | 10 | 10.7 | 1046 | 26.7 | 19.4 | 7.3 | 1349 | 33.4 | 1687 |
| 241.16.20.102 | 20 | 10 | 102 | 44.2 | 17.2 | 5 | 12.3 | 762 | 23.7 | 11.5 | 12.3 | 1050 | 30.6 | 22.2 | 8.4 | 1354 | 38.3 | 1693 |
| 241.16.20.115 | 20 | 10 | 115 | 38.4 | 19.4 | 5.6 | 13.8 | 745 | 26.7 | 12.9 | 13.8 | 1026 | 34.5 | 25 | 9.5 | 1324 | 43.1 | 1655 |
| 241.16.20.127 | 20 | 10 | 127 | 34.1 | 21.4 | 6.2 | 15.2 | 730 | 29.5 | 14.3 | 15.2 | 1006 | 38.1 | 27.6 | 10.5 | 1299 | 47.6 | 1623 |
| 241.16.20.139 | 20 | 10 | 139 | 31 | 23.4 | 6.8 | 16.7 | 727 | 32.3 | 15.6 | 16.7 | 1001 | 41.7 | 30.2 | 11.5 | 1292 | 52.1 | 1615 |
| 241.16.20.152 | 20 | 10 | 152 | 28.2 | 25.6 | 7.4 | 18.2 | 723 | 35.3 | 17.1 | 18.2 | 997 | 45.6 | 33.1 | 12.5 | 1286 | 57 | 1607 |
| 241.16.20.305 | 20 | 10 | 305 | 14 | 51.5 | 14.9 | 36.6 | 721 | 70.9 | 34.3 | 36.6 | 993 | 91.5 | 66.4 | 25.2 | 1281 | 114.4 | 1602 |
| 241.16.25.025 | 25 | 12 | 25 | 375 | 4.2 | 1.2 | 3 | 1586 | 5.8 | 2.8 | 3 | 2186 | 7.5 | 5.5 | 2.1 | 2820 | 9.4 | 3525 |
| 241.16.25.032 | 25 | 12 | 32 | 297 | 5.4 | 1.6 | 3.8 | 1604 | 7.4 | 3.6 | 3.8 | 2210 | 9.6 | 7 | 2.6 | 2851 | 12 | 3564 |
| 241.16.25.038 | 25 | 12 | 38 | 219 | 6.4 | 1.9 | 4.6 | 1409 | 8.9 | 4.3 | 4.6 | 1942 | 11.4 | 8.3 | 3.1 | 2505 | 14.3 | 3132 |
| 241.16.25.044 | 25 | 12 | 44 | 187 | 7.4 | 2.1 | 5.3 | 1388 | 10.2 | 5 | 5.3 | 1913 | 13.2 | 9.6 | 3.6 | 2468 | 16.5 | 3086 |
| 241.16.25.051 | 25 | 12 | 51 | 156 | 8.6 | 2.5 | 6.1 | 1341 | 11.8 | 5.7 | 6.1 | 1847 | 15.3 | 11.1 | 4.2 | 2384 | 19.1 | 2980 |
| 241.16.25.064 | 25 | 12 | 64 | 123 | 10.8 | 3.1 | 7.7 | 1328 | 14.9 | 7.2 | 7.7 | 1830 | 19.2 | 13.9 | 5.3 | 2362 | 24 | 2952 |
| 241.16.25.076 | 25 | 12 | 76 | 99 | 11.9 | 3.4 | 8.5 | 1181 | 16.4 | 8 | 8.5 | 1627 | 21.2 | 15.4 | 5.8 | 2099 | 26.5 | 2624 |
| 241.16.25.089 | 25 | 12 | 89 | 84 | 15 | 4.3 | 10.7 | 1263 | 20.7 | 10 | 10.7 | 1739 | 26.7 | 19.4 | 7.3 | 2244 | 33.4 | 2806 |
| 241.16.25.102 | 25 | 12 | 102 | 73 | 17.2 | 5 | 12.3 | 1258 | 23.7 | 11.5 | 12.3 | 1733 | 30.6 | 22.2 | 8.4 | 2237 | 38.3 | 2796 |
| 241.16.25.115 | 25 | 12 | 115 | 65 | 19.4 | 5.6 | 13.8 | 1261 | 26.7 | 12.9 | 13.8 | 1737 | 34.5 | 25 | 9.5 | 2241 | 43.1 | 2802 |
| 241.16.25.127 | 25 | 12 | 127 | 57.7 | 21.4 | 6.2 | 15.2 | 1236 | 29.5 | 14.3 | 15.2 | 1703 | 38.1 | 27.6 | 10.5 | 2197 | 47.6 | 2747 |
| 241.16.25.139 | 25 | 12 | 139 | 52.7 | 23.4 | 6.8 | 16.7 | 1236 | 32.3 | 15.6 | 16.7 | 1702 | 41.7 | 30.2 | 11.5 | 2197 | 52.1 | 2746 |
| 241.16.25.152 | 25 | 12 | 152 | 47.8 | 25.6 | 7.4 | 18.2 | 1226 | 35.3 | 17.1 | 18.2 | 1689 | 45.6 | 33.1 | 12.5 | 2180 | 57 | 2725 |
| 241.16.25.178 | 25 | 12 | 178 | 41 | 30.1 | 8.7 | 21.4 | 1232 | 41.4 | 20 | 21.4 | 1698 | 53.4 | 38.7 | 14.7 | 2191 | 66.8 | 2739 |
| 241.16.25.203 | 25 | 12 | 203 | 35.8 | 34.2 | 9.9 | 24.4 | 1226 | 47.2 | 22.8 | 24.4 | 1689 | 60.9 | 44.1 | 16.7 | 2180 | 76.1 | 2724 |
| 241.16.25.305 | 25 | 12 | 305 | 22.9 | 51.5 | 14.9 | 36.6 | 1179 | 70.9 | 34.3 | 36.6 | 1624 | 91.5 | 66.4 | 25.2 | 2096 | 114.4 | 2620 |

# HIGH PERFORMANCE COMPRESSION SPRING, LF, COLOUR "RED", DIN ISO 10243

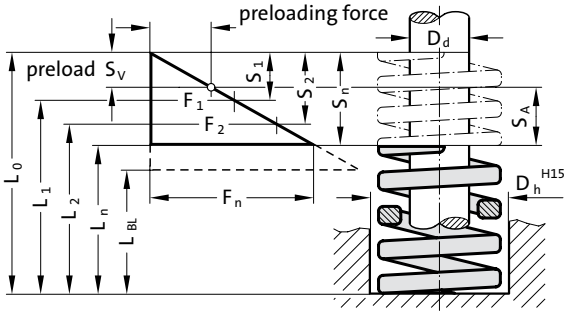


$D_h$ = dia. of guide sleeve
$D_d$ = diameter of guide pin
$L_0$ = free length of spring
$L_1...L_n$ = length of loaded spring (mm) as related to spring forces $F_1...F_n$
$L_{BL}$ = length of compacted spring (i.e. wire-to-wire)
$F_1...F_n$ = forces (N) as related to length of spring $L_1...L_n$
$S_{V1}...S_{V7}$ = recommend. preload. compression, as relat. to compress. $S_1...S_7$
$S_1...S_n$ = compr. as related to spring forces $F_1...F_n$
R = spring rate (N/mm)
$S_{A1}...S_{A7}$ = working stroke (mm)

## 241.16. High performance compression spring, LF, Colour "Red", DIN ISO 10243

| | | | | | | | | | 62% | | | | 80% | | | | | |
|---|---|---|---|---|---|---|---|---|---|---|---|---|---|---|---|---|---|---|
| Order No | $D_h$ | $D_d$ | $L_0$ | R | $S_1$ | $S_{V1}$ | $S_{A1}$ | $F_1$ | $S_2$ | $S_{V2}$ | $S_{A2}$ | $F_2$ | $S_3$ | $S_{V3}$ | $S_{A3}$ | $F_3$ | $S_n$ | $F_n$ |
| 241.16.32.038 | 32 | 16 | 38 | 388 | 6.4 | 1.9 | 4.6 | 2497 | 8.9 | 4.3 | 4.6 | 3440 | 11.4 | 8.3 | 3.1 | 4439 | 14.3 | 5548 |
| 241.16.32.044 | 32 | 16 | 44 | 324 | 7.4 | 2.1 | 5.3 | 2406 | 10.2 | 5 | 5.3 | 3315 | 13.2 | 9.6 | 3.6 | 4277 | 16.5 | 5346 |
| 241.16.32.051 | 32 | 16 | 51 | 272 | 8.6 | 2.5 | 6.1 | 2338 | 11.8 | 5.7 | 6.1 | 3221 | 15.3 | 11.1 | 4.2 | 4156 | 19.1 | 5195 |
| 241.16.32.064 | 32 | 16 | 64 | 212 | 10.8 | 3.1 | 7.7 | 2290 | 14.9 | 7.2 | 7.7 | 3155 | 19.2 | 13.9 | 5.3 | 4070 | 24 | 5088 |
| 241.16.32.076 | 32 | 16 | 76 | 172 | 12.8 | 3.7 | 9.1 | 2206 | 17.7 | 8.6 | 9.1 | 3039 | 22.8 | 16.5 | 6.3 | 3922 | 28.5 | 4902 |
| 241.16.32.089 | 32 | 16 | 89 | 141 | 15 | 4.3 | 10.7 | 2119 | 20.7 | 10 | 10.7 | 2920 | 26.7 | 19.4 | 7.3 | 3768 | 33.4 | 4709 |
| 241.16.32.102 | 32 | 16 | 102 | 122 | 17.2 | 5 | 12.3 | 2103 | 23.7 | 11.5 | 12.3 | 2897 | 30.6 | 22.2 | 8.4 | 3738 | 38.3 | 4673 |
| 241.16.32.115 | 32 | 16 | 115 | 107 | 19.4 | 5.6 | 13.8 | 2075 | 26.7 | 12.9 | 13.8 | 2859 | 34.5 | 25 | 9.5 | 3689 | 43.1 | 4612 |
| 241.16.32.127 | 32 | 16 | 127 | 93 | 21.4 | 6.2 | 15.2 | 1992 | 29.5 | 14.3 | 15.2 | 2745 | 38.1 | 27.6 | 10.5 | 3541 | 47.6 | 4427 |
| 241.16.32.139 | 32 | 16 | 139 | 86 | 23.4 | 6.8 | 16.7 | 2016 | 32.3 | 15.6 | 16.7 | 2778 | 41.7 | 30.2 | 11.5 | 3584 | 52.1 | 4481 |
| 241.16.32.152 | 32 | 16 | 152 | 78 | 25.6 | 7.4 | 18.2 | 2001 | 35.3 | 17.1 | 18.2 | 2757 | 45.6 | 33.1 | 12.5 | 3557 | 57 | 4446 |
| 241.16.32.178 | 32 | 16 | 178 | 67.2 | 30.1 | 8.7 | 21.4 | 2020 | 41.4 | 20 | 21.4 | 2783 | 53.4 | 38.7 | 14.7 | 3591 | 66.8 | 4489 |
| 241.16.32.203 | 32 | 16 | 203 | 59.1 | 34.2 | 9.9 | 24.4 | 2024 | 47.2 | 22.8 | 24.4 | 2788 | 60.9 | 44.1 | 16.7 | 3598 | 76.1 | 4498 |
| 241.16.32.254 | 32 | 16 | 254 | 46.6 | 42.9 | 12.4 | 30.5 | 1998 | 59.1 | 28.6 | 30.5 | 2753 | 76.2 | 55.3 | 21 | 3553 | 95.3 | 4441 |
| 241.16.32.305 | 32 | 16 | 305 | 38 | 51.5 | 14.9 | 36.6 | 1956 | 70.9 | 34.3 | 36.6 | 2695 | 91.5 | 66.4 | 25.2 | 3478 | 114.4 | 4347 |
| 241.16.40.051 | 40 | 20 | 51 | 350 | 8.6 | 2.5 | 6.1 | 3008 | 11.8 | 5.7 | 6.1 | 4145 | 15.3 | 11.1 | 4.2 | 5348 | 19.1 | 6685 |
| 241.16.40.064 | 40 | 20 | 64 | 269 | 10.8 | 3.1 | 7.7 | 2905 | 14.9 | 7.2 | 7.7 | 4003 | 19.2 | 13.9 | 5.3 | 5165 | 24 | 6456 |
| 241.16.40.076 | 40 | 20 | 76 | 219 | 12.8 | 3.7 | 9.1 | 2809 | 17.7 | 8.6 | 9.1 | 3870 | 22.8 | 16.5 | 6.3 | 4993 | 28.5 | 6242 |
| 241.16.40.089 | 40 | 20 | 89 | 190 | 15 | 4.3 | 10.7 | 2856 | 20.7 | 10 | 10.7 | 3935 | 26.7 | 19.4 | 7.3 | 5077 | 33.4 | 6346 |
| 241.16.40.102 | 40 | 20 | 102 | 163 | 17.2 | 5 | 12.3 | 2809 | 23.7 | 11.5 | 12.3 | 3871 | 30.6 | 22.2 | 8.4 | 4994 | 38.3 | 6243 |
| 241.16.40.115 | 40 | 20 | 115 | 142 | 19.4 | 5.6 | 13.8 | 2754 | 26.7 | 12.9 | 13.8 | 3795 | 34.5 | 25 | 9.5 | 4896 | 43.1 | 6120 |
| 241.16.40.127 | 40 | 20 | 127 | 128 | 21.4 | 6.2 | 15.2 | 2742 | 29.5 | 14.3 | 15.2 | 3778 | 38.1 | 27.6 | 10.5 | 4874 | 47.6 | 6093 |
| 241.16.40.139 | 40 | 20 | 139 | 115 | 23.4 | 6.8 | 16.7 | 2696 | 32.3 | 15.6 | 16.7 | 3715 | 41.7 | 30.2 | 11.5 | 4793 | 52.1 | 5992 |
| 241.16.40.152 | 40 | 20 | 152 | 105 | 25.6 | 7.4 | 18.2 | 2693 | 35.3 | 17.1 | 18.2 | 3711 | 45.6 | 33.1 | 12.5 | 4788 | 57 | 5985 |
| 241.16.40.178 | 40 | 20 | 178 | 89 | 30.1 | 8.7 | 21.4 | 2675 | 41.4 | 20 | 21.4 | 3686 | 53.4 | 38.7 | 14.7 | 4756 | 66.8 | 5945 |
| 241.16.40.203 | 40 | 20 | 203 | 77 | 34.2 | 9.9 | 24.4 | 2637 | 47.2 | 22.8 | 24.4 | 3633 | 60.9 | 44.1 | 16.7 | 4688 | 76.1 | 5860 |
| 241.16.40.254 | 40 | 20 | 254 | 61 | 42.9 | 12.4 | 30.5 | 2616 | 59.1 | 28.6 | 30.5 | 3604 | 76.2 | 55.3 | 21 | 4651 | 95.3 | 5813 |
| 241.16.40.305 | 40 | 20 | 305 | 51 | 51.5 | 14.9 | 36.6 | 2625 | 70.9 | 34.3 | 36.6 | 3617 | 91.5 | 66.4 | 25.2 | 4668 | 114.4 | 5834 |
| 241.16.50.064 | 50 | 25 | 64 | 413 | 10.8 | 3.1 | 7.7 | 4460 | 14.9 | 7.2 | 7.7 | 6145 | 19.2 | 13.9 | 5.3 | 7930 | 24 | 9912 |
| 241.16.50.076 | 50 | 25 | 76 | 339 | 12.8 | 3.7 | 9.1 | 4348 | 17.7 | 8.6 | 9.1 | 5990 | 22.8 | 16.5 | 6.3 | 7729 | 28.5 | 9662 |
| 241.16.50.089 | 50 | 25 | 89 | 288 | 15 | 4.3 | 10.7 | 4329 | 20.7 | 10 | 10.7 | 5964 | 26.7 | 19.4 | 7.3 | 7695 | 33.4 | 9619 |
| 241.16.50.102 | 50 | 25 | 102 | 245 | 17.2 | 5 | 12.3 | 4223 | 23.7 | 11.5 | 12.3 | 5818 | 30.6 | 22.2 | 8.4 | 7507 | 38.3 | 9384 |
| 241.16.50.115 | 50 | 25 | 115 | 215 | 19.4 | 5.6 | 13.8 | 4170 | 26.7 | 12.9 | 13.8 | 5745 | 34.5 | 25 | 9.5 | 7413 | 43.1 | 9266 |
| 241.16.50.127 | 50 | 25 | 127 | 192 | 21.4 | 6.2 | 15.2 | 4113 | 29.5 | 14.3 | 15.2 | 5666 | 38.1 | 27.6 | 10.5 | 7311 | 47.6 | 9139 |
| 241.16.50.139 | 50 | 25 | 139 | 168 | 23.4 | 6.8 | 16.7 | 3939 | 32.3 | 15.6 | 16.7 | 5427 | 41.7 | 30.2 | 11.5 | 7002 | 52.1 | 8753 |
| 241.16.50.152 | 50 | 25 | 152 | 154 | 25.6 | 7.4 | 18.2 | 3950 | 35.3 | 17.1 | 18.2 | 5442 | 45.6 | 33.1 | 12.5 | 7022 | 57 | 8778 |
| 241.16.50.178 | 50 | 25 | 178 | 134 | 30.1 | 8.7 | 21.4 | 4028 | 41.4 | 20 | 21.4 | 5550 | 53.4 | 38.7 | 14.7 | 7161 | 66.8 | 8951 |
| 241.16.50.203 | 50 | 25 | 203 | 117 | 34.2 | 9.9 | 24.4 | 4007 | 47.2 | 22.8 | 24.4 | 5520 | 60.9 | 44.1 | 16.7 | 7123 | 76.1 | 8904 |
| 241.16.50.254 | 50 | 25 | 254 | 89 | 42.9 | 12.4 | 30.5 | 3817 | 59.1 | 28.6 | 30.5 | 5259 | 76.2 | 55.3 | 21 | 6785 | 95.3 | 8482 |
| 241.16.50.305 | 50 | 25 | 305 | 73 | 51.5 | 14.9 | 36.6 | 3758 | 70.9 | 34.3 | 36.6 | 5178 | 91.5 | 66.4 | 25.2 | 6681 | 114.4 | 8351 |
| 241.16.63.076 | 63 | 38 | 76 | 618 | 13 | 3.7 | 9.2 | 8009 | 17.9 | 8.6 | 9.2 | 11035 | 23 | 16.7 | 6.3 | 14239 | 28.8 | 17798 |
| 241.16.63.089 | 63 | 38 | 89 | 515 | 15.2 | 4.4 | 10.8 | 7833 | 21 | 10.1 | 10.8 | 10792 | 27 | 19.6 | 7.4 | 13926 | 33.8 | 17407 |
| 241.16.63.102 | 63 | 38 | 102 | 438 | 17.5 | 5 | 12.4 | 7647 | 24.1 | 11.6 | 12.4 | 10537 | 31 | 22.5 | 8.5 | 13596 | 38.8 | 16994 |
| 241.16.63.115 | 63 | 38 | 115 | 370 | 19.7 | 5.7 | 14 | 7293 | 27.2 | 13.1 | 14 | 10048 | 35 | 25.4 | 9.6 | 12965 | 43.8 | 16206 |
| 241.16.63.127 | 63 | 38 | 127 | 333 | 21.4 | 6.2 | 15.2 | 7118 | 29.4 | 14.2 | 15.2 | 9807 | 38 | 27.6 | 10.4 | 12654 | 47.5 | 15818 |
| 241.16.63.152 | 63 | 38 | 152 | 269 | 25.9 | 7.5 | 18.4 | 6960 | 35.6 | 17.2 | 18.4 | 9590 | 46 | 33.4 | 12.6 | 12374 | 57.5 | 15468 |
| 241.16.63.178 | 63 | 38 | 178 | 226 | 29.8 | 8.6 | 21.2 | 6743 | 41.1 | 19.9 | 21.2 | 9290 | 53 | 38.5 | 14.6 | 11987 | 66.3 | 14984 |
| 241.16.63.203 | 63 | 38 | 203 | 198 | 34.3 | 9.9 | 24.4 | 6798 | 47.3 | 22.9 | 24.4 | 9367 | 61 | 44.3 | 16.8 | 12086 | 76.3 | 15107 |
| 241.16.63.254 | 63 | 38 | 254 | 155 | 42.8 | 12.4 | 30.4 | 6626 | 58.9 | 28.5 | 30.4 | 9130 | 76 | 55.1 | 20.9 | 11780 | 95 | 14725 |
| 241.16.63.305 | 63 | 38 | 305 | 128 | 51.2 | 14.8 | 36.4 | 6555 | 70.6 | 34.1 | 36.4 | 9031 | 91 | 66 | 25 | 11653 | 113.8 | 14566 |

# HIGH PERFORMANCE COMPRESSION SPRING, XLF, COLOUR "YELLOW", DIN ISO 10243

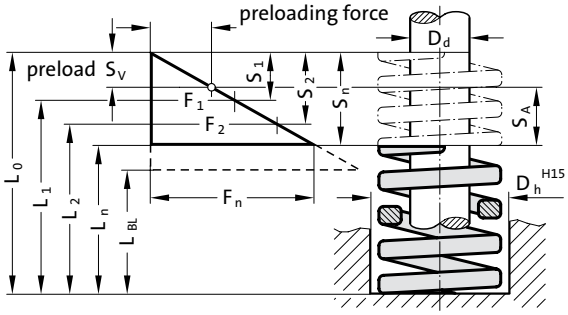


$D_h$ = dia. of guide sleeve
$D_d$ = diameter of guide pin
$L_0$ = free length of spring
$L_1...L_n$ = length of loaded spring (mm) as related to spring forces $F_1...F_n$
$L_{BL}$ = length of compacted spring (i.e. wire-to-wire)
$F_1...F_n$ = forces (N) as related to length of spring $L_1...L_n$
$S_{V1}...S_{V7}$ = recommend. preload. compression, as relat. to compress. $S_1...S_7$
$S_1...S_n$ = compr. as related to spring forces $F_1...F_n$
R = spring rate (N/mm)
$S_{A1}...S_{A7}$ = working stroke (mm)

## 241.17. High performance compression spring, XLF, Colour "Yellow", DIN ISO 10243

| | | | | | 45% | | | | 62% | | | | 80% | | | | | |
|---|---|---|---|---|---|---|---|---|---|---|---|---|---|---|---|---|---|---|
| Order No | $D_h$ | $D_d$ | $L_0$ | R | $S_1$ | $S_{V1}$ | $S_{A1}$ | $F_1$ | $S_2$ | $S_{V2}$ | $S_{A2}$ | $F_2$ | $S_3$ | $S_{V3}$ | $S_{A3}$ | $F_3$ | $S_n$ | $F_n$ |
| 241.17.10.025 | 10 | 5 | 25 | 36.8 | 3.5 | 1 | 2.5 | 129 | 4.8 | 2.3 | 2.5 | 178 | 6.2 | 4.5 | 1.7 | 230 | 7.8 | 287 |
| 241.17.10.032 | 10 | 5 | 32 | 27.9 | 4.5 | 1.3 | 3.2 | 126 | 6.2 | 3 | 3.2 | 173 | 8 | 5.8 | 2.2 | 223 | 10 | 279 |
| 241.17.10.038 | 10 | 5 | 38 | 23.7 | 5.4 | 1.5 | 3.8 | 127 | 7.4 | 3.6 | 3.8 | 175 | 9.5 | 6.9 | 2.6 | 226 | 11.9 | 282 |
| 241.17.10.044 | 10 | 5 | 44 | 19.2 | 6.2 | 1.8 | 4.4 | 119 | 8.6 | 4.1 | 4.4 | 164 | 11 | 8 | 3 | 212 | 13.8 | 265 |
| 241.17.10.051 | 10 | 5 | 51 | 16.5 | 7.2 | 2.1 | 5.1 | 118 | 9.9 | 4.8 | 5.1 | 163 | 12.7 | 9.2 | 3.5 | 210 | 15.9 | 262 |
| 241.17.10.064 | 10 | 5 | 64 | 13.2 | 9 | 2.6 | 6.4 | 119 | 12.4 | 6 | 6.4 | 164 | 16 | 11.6 | 4.4 | 211 | 20 | 264 |
| 241.17.10.076 | 10 | 5 | 76 | 10.9 | 10.7 | 3.1 | 7.6 | 117 | 14.8 | 7.1 | 7.6 | 161 | 19 | 13.8 | 5.2 | 208 | 23.8 | 259 |
| 241.17.10.305 | 10 | 5 | 305 | 2.6 | 42.9 | 12.4 | 30.5 | 112 | 59.1 | 28.6 | 30.5 | 154 | 76.3 | 55.3 | 21 | 198 | 95.4 | 248 |
| 241.17.13.025 | 12 | 6 | 25 | 58.5 | 3.5 | 1 | 2.5 | 205 | 4.8 | 2.3 | 2.5 | 283 | 6.2 | 4.5 | 1.7 | 365 | 7.8 | 456 |
| 241.17.13.032 | 12 | 6 | 32 | 43.9 | 4.5 | 1.3 | 3.2 | 198 | 6.2 | 3 | 3.2 | 272 | 8 | 5.8 | 2.2 | 351 | 10 | 439 |
| 241.17.13.038 | 12 | 6 | 38 | 36 | 5.4 | 1.5 | 3.8 | 193 | 7.4 | 3.6 | 3.8 | 266 | 9.5 | 6.9 | 2.6 | 343 | 11.9 | 428 |
| 241.17.13.044 | 12 | 6 | 44 | 30.3 | 6.2 | 1.8 | 4.4 | 188 | 8.6 | 4.1 | 4.4 | 259 | 11 | 8 | 3 | 335 | 13.8 | 418 |
| 241.17.13.051 | 12 | 6 | 51 | 26.2 | 7.2 | 2.1 | 5.1 | 187 | 9.9 | 4.8 | 5.1 | 258 | 12.7 | 9.2 | 3.5 | 333 | 15.9 | 417 |
| 241.17.13.064 | 12 | 6 | 64 | 21.2 | 9 | 2.6 | 6.4 | 191 | 12.4 | 6 | 6.4 | 263 | 16 | 11.6 | 4.4 | 339 | 20 | 424 |
| 241.17.13.076 | 12 | 6 | 76 | 17.1 | 10.7 | 3.1 | 7.6 | 183 | 14.8 | 7.1 | 7.6 | 252 | 19 | 13.8 | 5.2 | 326 | 23.8 | 407 |
| 241.17.13.089 | 12 | 6 | 89 | 14.5 | 12.5 | 3.6 | 8.9 | 181 | 17.2 | 8.3 | 8.9 | 250 | 22.2 | 16.1 | 6.1 | 322 | 27.8 | 403 |
| 241.17.13.305 | 12 | 6 | 305 | 4.3 | 42.9 | 12.4 | 30.5 | 185 | 59.1 | 28.6 | 30.5 | 254 | 76.3 | 55.3 | 21 | 328 | 95.4 | 410 |
| 241.17.16.025 | 16 | 8 | 25 | 118 | 3.5 | 1 | 2.5 | 414 | 4.8 | 2.3 | 2.5 | 571 | 6.2 | 4.5 | 1.7 | 736 | 7.8 | 920 |
| 241.17.16.032 | 16 | 8 | 32 | 89 | 4.5 | 1.3 | 3.2 | 400 | 6.2 | 3 | 3.2 | 552 | 8 | 5.8 | 2.2 | 712 | 10 | 890 |
| 241.17.16.038 | 16 | 8 | 38 | 72.1 | 5.4 | 1.5 | 3.8 | 386 | 7.4 | 3.6 | 3.8 | 532 | 9.5 | 6.9 | 2.6 | 686 | 11.9 | 858 |
| 241.17.16.044 | 16 | 8 | 44 | 60.9 | 6.2 | 1.8 | 4.4 | 378 | 8.6 | 4.1 | 4.4 | 521 | 11 | 8 | 3 | 672 | 13.8 | 840 |
| 241.17.16.051 | 16 | 8 | 51 | 52.3 | 7.2 | 2.1 | 5.1 | 374 | 9.9 | 4.8 | 5.1 | 516 | 12.7 | 9.2 | 3.5 | 665 | 15.9 | 832 |
| 241.17.16.064 | 16 | 8 | 64 | 41.2 | 9 | 2.6 | 6.4 | 371 | 12.4 | 6 | 6.4 | 511 | 16 | 11.6 | 4.4 | 659 | 20 | 824 |
| 241.17.16.076 | 16 | 8 | 76 | 34.1 | 10.7 | 3.1 | 7.6 | 365 | 14.8 | 7.1 | 7.6 | 503 | 19 | 13.8 | 5.2 | 649 | 23.8 | 812 |
| 241.17.16.089 | 16 | 8 | 89 | 29.5 | 12.5 | 3.6 | 8.9 | 369 | 17.2 | 8.3 | 8.9 | 508 | 22.2 | 16.1 | 6.1 | 656 | 27.8 | 820 |
| 241.17.16.102 | 16 | 8 | 102 | 25.6 | 14.4 | 4.1 | 10.2 | 367 | 19.8 | 9.6 | 10.2 | 506 | 25.5 | 18.5 | 7 | 653 | 31.9 | 817 |
| 241.17.16.305 | 16 | 8 | 305 | 8.4 | 42.9 | 12.4 | 30.5 | 361 | 59.1 | 28.6 | 30.5 | 497 | 76.3 | 55.3 | 21 | 641 | 95.4 | 801 |
| 241.17.20.025 | 20 | 10 | 25 | 293 | 3.5 | 1 | 2.5 | 1028 | 4.8 | 2.3 | 2.5 | 1417 | 6.2 | 4.5 | 1.7 | 1828 | 7.8 | 2285 |
| 241.17.20.032 | 20 | 10 | 32 | 224 | 4.5 | 1.3 | 3.2 | 1008 | 6.2 | 3 | 3.2 | 1389 | 8 | 5.8 | 2.2 | 1792 | 10 | 2240 |
| 241.17.20.038 | 20 | 10 | 38 | 177 | 5.4 | 1.5 | 3.8 | 948 | 7.4 | 3.6 | 3.8 | 1306 | 9.5 | 6.9 | 2.6 | 1685 | 11.9 | 2106 |
| 241.17.20.044 | 20 | 10 | 44 | 149 | 6.2 | 1.8 | 4.4 | 925 | 8.6 | 4.1 | 4.4 | 1275 | 11 | 8 | 3 | 1645 | 13.8 | 2056 |
| 241.17.20.051 | 20 | 10 | 51 | 128 | 7.2 | 2.1 | 5.1 | 916 | 9.9 | 4.8 | 5.1 | 1262 | 12.7 | 9.2 | 3.5 | 1628 | 15.9 | 2035 |
| 241.17.20.064 | 20 | 10 | 64 | 99 | 9 | 2.6 | 6.4 | 891 | 12.4 | 6 | 6.4 | 1228 | 16 | 11.6 | 4.4 | 1584 | 20 | 1980 |
| 241.17.20.076 | 20 | 10 | 76 | 81.7 | 10.7 | 3.1 | 7.6 | 875 | 14.8 | 7.1 | 7.6 | 1206 | 19 | 13.8 | 5.2 | 1556 | 23.8 | 1944 |
| 241.17.20.089 | 20 | 10 | 89 | 69.5 | 12.5 | 3.6 | 8.9 | 869 | 17.2 | 8.3 | 8.9 | 1198 | 22.2 | 16.1 | 6.1 | 1546 | 27.8 | 1932 |
| 241.17.20.102 | 20 | 10 | 102 | 60.6 | 14.4 | 4.1 | 10.2 | 870 | 19.8 | 9.6 | 10.2 | 1199 | 25.5 | 18.5 | 7 | 1547 | 31.9 | 1933 |
| 241.17.20.115 | 20 | 10 | 115 | 53 | 16.2 | 4.7 | 11.5 | 856 | 22.3 | 10.8 | 11.5 | 1180 | 28.7 | 20.8 | 7.9 | 1522 | 35.9 | 1903 |
| 241.17.20.127 | 20 | 10 | 127 | 47.5 | 17.8 | 5.1 | 12.7 | 846 | 24.6 | 11.9 | 12.7 | 1166 | 31.7 | 23 | 8.7 | 1505 | 39.6 | 1881 |
| 241.17.20.139 | 20 | 10 | 139 | 43 | 19.5 | 5.6 | 13.9 | 840 | 26.9 | 13 | 13.9 | 1157 | 34.7 | 25.2 | 9.5 | 1493 | 43.4 | 1866 |
| 241.17.20.152 | 20 | 10 | 152 | 39 | 21.4 | 6.2 | 15.2 | 834 | 29.4 | 14.2 | 15.2 | 1149 | 38 | 27.6 | 10.4 | 1482 | 47.5 | 1852 |
| 241.17.20.305 | 20 | 10 | 305 | 20 | 42.9 | 12.4 | 30.5 | 859 | 59.1 | 28.6 | 30.5 | 1183 | 76.3 | 55.3 | 21 | 1526 | 95.4 | 1908 |
| 241.17.25.025 | 25 | 12 | 25 | 459 | 3.5 | 1 | 2.5 | 1611 | 4.8 | 2.3 | 2.5 | 2220 | 6.2 | 4.5 | 1.7 | 2864 | 7.8 | 3580 |
| 241.17.25.032 | 25 | 12 | 32 | 374 | 4.5 | 1.3 | 3.2 | 1683 | 6.2 | 3 | 3.2 | 2319 | 8 | 5.8 | 2.2 | 2992 | 10 | 3740 |
| 241.17.25.038 | 25 | 12 | 38 | 300 | 5.4 | 1.5 | 3.8 | 1606 | 7.4 | 3.6 | 3.8 | 2213 | 9.5 | 6.9 | 2.6 | 2856 | 11.9 | 3570 |
| 241.17.25.044 | 25 | 12 | 44 | 244 | 6.2 | 1.8 | 4.4 | 1515 | 8.6 | 4.1 | 4.4 | 2088 | 11 | 8 | 3 | 2694 | 13.8 | 3367 |
| 241.17.25.051 | 25 | 12 | 51 | 208 | 7.2 | 2.1 | 5.1 | 1488 | 9.9 | 4.8 | 5.1 | 2050 | 12.7 | 9.2 | 3.5 | 2646 | 15.9 | 3307 |
| 241.17.25.064 | 25 | 12 | 64 | 161 | 9 | 2.6 | 6.4 | 1449 | 12.4 | 6 | 6.4 | 1996 | 16 | 11.6 | 4.4 | 2576 | 20 | 3220 |
| 241.17.25.076 | 25 | 12 | 76 | 131 | 10.7 | 3.1 | 7.6 | 1403 | 14.8 | 7.1 | 7.6 | 1933 | 19 | 13.8 | 5.2 | 2494 | 23.8 | 3118 |
| 241.17.25.089 | 25 | 12 | 89 | 111 | 12.5 | 3.6 | 8.9 | 1389 | 17.2 | 8.3 | 8.9 | 1913 | 22.2 | 16.1 | 6.1 | 2469 | 27.8 | 3086 |
| 241.17.25.102 | 25 | 12 | 102 | 96.3 | 14.4 | 4.1 | 10.2 | 1382 | 19.8 | 9.6 | 10.2 | 1905 | 25.5 | 18.5 | 7 | 2458 | 31.9 | 3072 |
| 241.17.25.115 | 25 | 12 | 115 | 85.7 | 16.2 | 4.7 | 11.5 | 1384 | 22.3 | 10.8 | 11.5 | 1908 | 28.7 | 20.8 | 7.9 | 2461 | 35.9 | 3077 |
| 241.17.25.127 | 25 | 12 | 127 | 76.3 | 17.8 | 5.1 | 12.7 | 1360 | 24.6 | 11.9 | 12.7 | 1873 | 31.7 | 23 | 8.7 | 2417 | 39.6 | 3021 |
| 241.17.25.139 | 25 | 12 | 139 | 66 | 19.5 | 5.6 | 13.9 | 1289 | 26.9 | 13 | 13.9 | 1776 | 34.7 | 25.2 | 9.5 | 2292 | 43.4 | 2864 |
| 241.17.25.152 | 25 | 12 | 152 | 63.5 | 21.4 | 6.2 | 15.2 | 1357 | 29.4 | 14.2 | 15.2 | 1870 | 38 | 27.6 | 10.4 | 2413 | 47.5 | 3016 |
| 241.17.25.178 | 25 | 12 | 178 | 53.9 | 25 | 7.2 | 17.8 | 1349 | 34.5 | 16.7 | 17.8 | 1858 | 44.5 | 32.2 | 12.2 | 2397 | 55.6 | 2997 |
| 241.17.25.203 | 25 | 12 | 203 | 47 | 28.5 | 8.2 | 20.3 | 1341 | 39.3 | 19 | 20.3 | 1847 | 50.7 | 36.8 | 13.9 | 2384 | 63.4 | 2980 |
| 241.17.25.305 | 25 | 12 | 305 | 30.9 | 42.9 | 12.4 | 30.5 | 1327 | 59.1 | 28.6 | 30.5 | 1828 | 76.3 | 55.3 | 21 | 2358 | 95.4 | 2948 |

# HIGH PERFORMANCE COMPRESSION SPRING, XLF, COLOUR "YELLOW", DIN ISO 10243

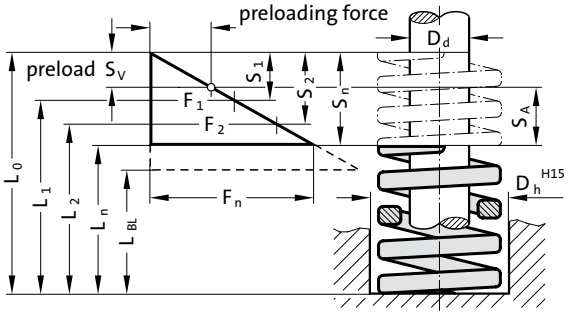


$D_h$ = dia. of guide sleeve
$D_d$ = diameter of guide pin
$L_0$ = free length of spring
$L_1...L_n$ = length of loaded spring (mm) as related to spring forces $F_1...F_n$
$L_{BL}$ = length of compacted spring (i.e. wire-to-wire)
$F_1...F_n$ = forces (N) as related to length of spring $L_1...L_n$
$S_{V1}...S_{V7}$ = recommend. preload. compression, as relat. to compress. $S_1...S_7$
$S_1...S_n$ = compr. as related to spring forces $F_1...F_n$
R = spring rate (N/mm)
$S_{A1}...S_{A7}$ = working stroke (mm)

## 241.17. High performance compression spring, XLF, Colour "Yellow", DIN ISO 10243

| | | | | | 45% | | | | 62% | | | | 80% | | | | | |
|---|---|---|---|---|---|---|---|---|---|---|---|---|---|---|---|---|---|---|
| Order No | $D_h$ | $D_d$ | $L_0$ | R | $S_1$ | $S_{V1}$ | $S_{A1}$ | $F_1$ | $S_2$ | $S_{V2}$ | $S_{A2}$ | $F_2$ | $S_3$ | $S_{V3}$ | $S_{A3}$ | $F_3$ | $S_n$ | $F_n$ |
| 241.17.32.038 | 32 | 16 | 38 | 480 | 5.4 | 1.5 | 3.8 | 2570 | 7.4 | 3.6 | 3.8 | 3541 | 9.5 | 6.9 | 2.6 | 4570 | 11.9 | 5712 |
| 241.17.32.044 | 32 | 16 | 44 | 390 | 6.2 | 1.8 | 4.4 | 2422 | 8.6 | 4.1 | 4.4 | 3337 | 11 | 8 | 3 | 4306 | 13.8 | 5382 |
| 241.17.32.051 | 32 | 16 | 51 | 336 | 7.2 | 2.1 | 5.1 | 2404 | 9.9 | 4.8 | 5.1 | 3312 | 12.7 | 9.2 | 3.5 | 4274 | 15.9 | 5342 |
| 241.17.32.064 | 32 | 16 | 64 | 269 | 9 | 2.6 | 6.4 | 2421 | 12.4 | 6 | 6.4 | 3336 | 16 | 11.6 | 4.4 | 4304 | 20 | 5380 |
| 241.17.32.076 | 32 | 16 | 76 | 219 | 10.7 | 3.1 | 7.6 | 2345 | 14.8 | 7.1 | 7.6 | 3232 | 19 | 13.8 | 5.2 | 4170 | 23.8 | 5212 |
| 241.17.32.089 | 32 | 16 | 89 | 180 | 12.5 | 3.6 | 8.9 | 2252 | 17.2 | 8.3 | 8.9 | 3102 | 22.2 | 16.1 | 6.1 | 4003 | 27.8 | 5004 |
| 241.17.32.102 | 32 | 16 | 102 | 155 | 14.4 | 4.1 | 10.2 | 2225 | 19.8 | 9.6 | 10.2 | 3066 | 25.5 | 18.5 | 7 | 3956 | 31.9 | 4944 |
| 241.17.32.115 | 32 | 16 | 115 | 140 | 16.2 | 4.7 | 11.5 | 2262 | 22.3 | 10.8 | 11.5 | 3116 | 28.7 | 20.8 | 7.9 | 4021 | 35.9 | 5026 |
| 241.17.32.127 | 32 | 16 | 127 | 124 | 17.8 | 5.1 | 12.7 | 2210 | 24.6 | 11.9 | 12.7 | 3044 | 31.7 | 23 | 8.7 | 3928 | 39.6 | 4910 |
| 241.17.32.139 | 32 | 16 | 139 | 112 | 19.5 | 5.6 | 13.9 | 2187 | 26.9 | 13 | 13.9 | 3014 | 34.7 | 25.2 | 9.5 | 3889 | 43.4 | 4861 |
| 241.17.32.152 | 32 | 16 | 152 | 102 | 21.4 | 6.2 | 15.2 | 2180 | 29.4 | 14.2 | 15.2 | 3004 | 38 | 27.6 | 10.4 | 3876 | 47.5 | 4845 |
| 241.17.32.178 | 32 | 16 | 178 | 88.2 | 25 | 7.2 | 17.8 | 2207 | 34.5 | 16.7 | 17.8 | 3040 | 44.5 | 32.2 | 12.2 | 3923 | 55.6 | 4904 |
| 241.17.32.203 | 32 | 16 | 203 | 76 | 28.5 | 8.2 | 20.3 | 2168 | 39.3 | 19 | 20.3 | 2987 | 50.7 | 36.8 | 13.9 | 3855 | 63.4 | 4818 |
| 241.17.32.254 | 32 | 16 | 254 | 60.8 | 36 | 10.4 | 25.6 | 2189 | 49.6 | 24 | 25.6 | 3016 | 64 | 46.4 | 17.6 | 3891 | 80 | 4864 |
| 241.17.32.305 | 32 | 16 | 305 | 49 | 42.9 | 12.4 | 30.5 | 2104 | 59.1 | 28.6 | 30.5 | 2898 | 76.3 | 55.3 | 21 | 3740 | 95.4 | 4675 |
| 241.17.40.051 | 40 | 20 | 51 | 628 | 7.2 | 2.1 | 5.1 | 4493 | 9.9 | 4.8 | 5.1 | 6191 | 12.7 | 9.2 | 3.5 | 7988 | 15.9 | 9985 |
| 241.17.40.064 | 40 | 20 | 64 | 487 | 9 | 2.6 | 6.4 | 4383 | 12.4 | 6 | 6.4 | 6039 | 16 | 11.6 | 4.4 | 7792 | 20 | 9740 |
| 241.17.40.076 | 40 | 20 | 76 | 379 | 10.7 | 3.1 | 7.6 | 4059 | 14.8 | 7.1 | 7.6 | 5593 | 19 | 13.8 | 5.2 | 7216 | 23.8 | 9020 |
| 241.17.40.089 | 40 | 20 | 89 | 321 | 12.5 | 3.6 | 8.9 | 4016 | 17.2 | 8.3 | 8.9 | 5533 | 22.2 | 16.1 | 6.1 | 7139 | 27.8 | 8924 |
| 241.17.40.102 | 40 | 20 | 102 | 281 | 14.4 | 4.1 | 10.2 | 4034 | 19.8 | 9.6 | 10.2 | 5558 | 25.5 | 18.5 | 7 | 7171 | 31.9 | 8964 |
| 241.17.40.115 | 40 | 20 | 115 | 245 | 16.2 | 4.7 | 11.5 | 3958 | 22.3 | 10.8 | 11.5 | 5453 | 28.7 | 20.8 | 7.9 | 7036 | 35.9 | 8796 |
| 241.17.40.127 | 40 | 20 | 127 | 221 | 17.8 | 5.1 | 12.7 | 3938 | 24.6 | 11.9 | 12.7 | 5426 | 31.7 | 23 | 8.7 | 7001 | 39.6 | 8752 |
| 241.17.40.139 | 40 | 20 | 139 | 185 | 19.5 | 5.6 | 13.9 | 3613 | 26.9 | 13 | 13.9 | 4978 | 34.7 | 25.2 | 9.5 | 6423 | 43.4 | 8029 |
| 241.17.40.152 | 40 | 20 | 152 | 168 | 21.4 | 6.2 | 15.2 | 3591 | 29.4 | 14.2 | 15.2 | 4948 | 38 | 27.6 | 10.4 | 6384 | 47.5 | 7980 |
| 241.17.40.178 | 40 | 20 | 178 | 150 | 25 | 7.2 | 17.8 | 3753 | 34.5 | 16.7 | 17.8 | 5171 | 44.5 | 32.2 | 12.2 | 6672 | 55.6 | 8340 |
| 241.17.40.203 | 40 | 20 | 203 | 132 | 28.5 | 8.2 | 20.3 | 3766 | 39.3 | 19 | 20.3 | 5189 | 50.7 | 36.8 | 13.9 | 6695 | 63.4 | 8369 |
| 241.17.40.254 | 40 | 20 | 254 | 107 | 36 | 10.4 | 25.6 | 3852 | 49.6 | 24 | 25.6 | 5307 | 64 | 46.4 | 17.6 | 6848 | 80 | 8560 |
| 241.17.40.305 | 40 | 20 | 305 | 87.8 | 43.1 | 12.5 | 30.7 | 3785 | 59.4 | 28.7 | 30.7 | 5215 | 76.6 | 55.6 | 21.1 | 6729 | 95.8 | 8411 |
| 241.17.50.064 | 50 | 25 | 64 | 709 | 9 | 2.6 | 6.4 | 6381 | 12.4 | 6 | 6.4 | 8792 | 16 | 11.6 | 4.4 | 11344 | 20 | 14180 |
| 241.17.50.076 | 50 | 25 | 76 | 572 | 10.7 | 3.1 | 7.6 | 6126 | 14.8 | 7.1 | 7.6 | 8440 | 19 | 13.8 | 5.2 | 10891 | 23.8 | 13614 |
| 241.17.50.089 | 50 | 25 | 89 | 475 | 12.5 | 3.6 | 8.9 | 5942 | 17.2 | 8.3 | 8.9 | 8187 | 22.2 | 16.1 | 6.1 | 10564 | 27.8 | 13205 |
| 241.17.50.102 | 50 | 25 | 102 | 405 | 14.4 | 4.1 | 10.2 | 5814 | 19.8 | 9.6 | 10.2 | 8010 | 25.5 | 18.5 | 7 | 10336 | 31.9 | 12920 |
| 241.17.50.115 | 50 | 25 | 115 | 352 | 16.2 | 4.7 | 11.5 | 5687 | 22.3 | 10.8 | 11.5 | 7835 | 28.7 | 20.8 | 7.9 | 10109 | 35.9 | 12637 |
| 241.17.50.127 | 50 | 25 | 127 | 316 | 17.8 | 5.1 | 12.7 | 5631 | 24.6 | 11.9 | 12.7 | 7758 | 31.7 | 23 | 8.7 | 10011 | 39.6 | 12514 |
| 241.17.50.139 | 50 | 25 | 139 | 289 | 19.5 | 5.6 | 13.9 | 5644 | 26.9 | 13 | 13.9 | 7776 | 34.7 | 25.2 | 9.5 | 10034 | 43.4 | 12543 |
| 241.17.50.152 | 50 | 25 | 152 | 255 | 21.4 | 6.2 | 15.2 | 5451 | 29.4 | 14.2 | 15.2 | 7510 | 38 | 27.6 | 10.4 | 9690 | 47.5 | 12112 |
| 241.17.50.178 | 50 | 25 | 178 | 215 | 25 | 7.2 | 17.8 | 5379 | 34.5 | 16.7 | 17.8 | 7411 | 44.5 | 32.2 | 12.2 | 9563 | 55.6 | 11954 |
| 241.17.50.203 | 50 | 25 | 203 | 187 | 28.5 | 8.2 | 20.3 | 5335 | 39.3 | 19 | 20.3 | 7351 | 50.7 | 36.8 | 13.9 | 9485 | 63.4 | 11856 |
| 241.17.50.254 | 50 | 25 | 254 | 153 | 36 | 10.4 | 25.6 | 5508 | 49.6 | 24 | 25.6 | 7589 | 64 | 46.4 | 17.6 | 9792 | 80 | 12240 |
| 241.17.50.305 | 50 | 25 | 305 | 127 | 42.9 | 12.4 | 30.5 | 5452 | 59.1 | 28.6 | 30.5 | 7512 | 76.3 | 55.3 | 21 | 9693 | 95.4 | 12116 |
| 241.17.63.076 | 63 | 38 | 76 | 952 | 10.7 | 3.1 | 7.6 | 10196 | 14.8 | 7.1 | 7.6 | 14048 | 19 | 13.8 | 5.2 | 18126 | 23.8 | 22658 |
| 241.17.63.089 | 63 | 38 | 89 | 819 | 12.4 | 3.6 | 8.8 | 10135 | 17 | 8.2 | 8.8 | 13964 | 22 | 16 | 6 | 18018 | 27.5 | 22522 |
| 241.17.63.102 | 63 | 38 | 102 | 700 | 14.6 | 4.2 | 10.4 | 10238 | 20.2 | 9.8 | 10.4 | 14105 | 26 | 18.8 | 7.2 | 18200 | 32.5 | 22750 |
| 241.17.63.115 | 63 | 38 | 115 | 620 | 16.3 | 4.7 | 11.6 | 10128 | 22.5 | 10.9 | 11.6 | 13954 | 29 | 21.1 | 8 | 18005 | 36.3 | 22506 |
| 241.17.63.127 | 63 | 38 | 127 | 565 | 18 | 5.2 | 12.8 | 10170 | 24.8 | 12 | 12.8 | 14012 | 32 | 23.2 | 8.8 | 18080 | 40 | 22600 |
| 241.17.63.152 | 63 | 38 | 152 | 458 | 21.4 | 6.2 | 15.2 | 9790 | 29.4 | 14.2 | 15.2 | 13488 | 38 | 27.6 | 10.4 | 17404 | 47.5 | 21755 |
| 241.17.63.178 | 63 | 38 | 178 | 384 | 24.8 | 7.2 | 17.6 | 9504 | 34.1 | 16.5 | 17.6 | 13094 | 44 | 31.9 | 12.1 | 16896 | 55 | 21120 |
| 241.17.63.203 | 63 | 38 | 203 | 337 | 28.7 | 8.3 | 20.4 | 9675 | 39.6 | 19.1 | 20.4 | 13330 | 51 | 37 | 14 | 17200 | 63.8 | 21501 |
| 241.17.63.254 | 63 | 38 | 254 | 263 | 36 | 10.4 | 25.6 | 9468 | 49.6 | 24 | 25.6 | 13045 | 64 | 46.4 | 17.6 | 16832 | 80 | 21040 |
| 241.17.63.305 | 63 | 38 | 305 | 218 | 42.8 | 12.4 | 30.4 | 9320 | 58.9 | 28.5 | 30.4 | 12840 | 76 | 55.1 | 20.9 | 16568 | 95 | 20710 |

# HIGH PERFORMANCE COMPRESSION SPRING, 3XLF, COLOUR "WHITE"

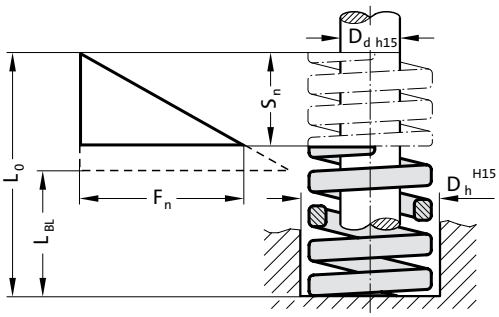


$D_h$ = dia. of guide sleeve

$D_d$ = diameter of guide pin

$L_0$ = free length of spring

$L_{BL}$ = length of compacted spring (i.e. wire-to-wire)

$F_n$ = Spring force in N

$S_n$ = Stroke

R = spring rate (N/mm)

**Description:**

The diameters are comparable with the high performance compression springs DIN ISO 10243. The special flat wound wire cross section brings a reduction of the medium winding diameter for the same winding ratio with an edge-wound spring. Consequently, the high performance compression spring 3XLF has a 6x larger starting spring force than the high performance compression spring DIN ISO 10243 colour code “yellow”.

### 241.19. High performance compression spring, 3XLF, Colour "White"

| Order No | $D_h$ | $D_d$ | $L_0$ | R | $s_1$ | $S_{V1}$ | $S_{A1}$ | $F_1$ | $S_n$ | $F_n$ |
|---|---|---|---|---|---|---|---|---|---|---|
| 241.19.16.020 | 16 | 6.3 | 20 | 1,818 | 2.2 | 1 | 1.2 | 3,999.6 | 3 | 5,454 |
| 241.19.16.035 | 16 | 6.3 | 35 | 1,000 | 4 | 1.75 | 2.25 | 4,000 | 5.5 | 5,500 |
| 241.19.16.050 | 16 | 6.3 | 50 | 615 | 6.5 | 2.5 | 4 | 3,997.5 | 8 | 4,920 |
| 241.19.16.075 | 16 | 6.3 | 75 | 400 | 10 | 3.75 | 6.25 | 4,000 | 12.5 | 5,000 |
| 241.19.16.100 | 16 | 6.3 | 100 | 286 | 14 | 5 | 9 | 4,004 | 16.3 | 4,661.8 |
| 241.19.19.025 | 19 | 8 | 25 | 2,400 | 2.5 | 1.25 | 1.25 | 6,000 | 3.4 | 8,160 |
| 241.19.19.040 | 19 | 8 | 40 | 1,333 | 4.5 | 2 | 2.5 | 5,998.5 | 5.9 | 7,864.7 |
| 241.19.19.050 | 19 | 8 | 50 | 1,000 | 6 | 2.5 | 3.5 | 6,000 | 7.8 | 7,800 |
| 241.19.19.075 | 19 | 8 | 75 | 600 | 10 | 3.75 | 6.25 | 6,000 | 12.4 | 7,440 |
| 241.19.19.100 | 19 | 8 | 100 | 429 | 14 | 5 | 9 | 6,006 | 16.5 | 7,078.5 |
| 241.19.25.030 | 25 | 10 | 30 | 4,800 | 2.5 | 1.5 | 1 | 12,000 | 3 | 14,400 |
| 241.19.25.050 | 25 | 10 | 50 | 2,400 | 5 | 2.5 | 2.5 | 12,000 | 5.9 | 14,160 |
| 241.19.25.075 | 25 | 10 | 75 | 1,500 | 8 | 3.75 | 4.25 | 12,000 | 9.5 | 14,250 |
| 241.19.25.100 | 25 | 10 | 100 | 1,000 | 12 | 5 | 7 | 12,000 | 14.7 | 14,700 |
| 241.19.25.125 | 25 | 10 | 125 | 857 | 14 | 6.25 | 7.75 | 11,998 | 16.9 | 14,483.3 |
| 241.19.32.035 | 32 | 12.5 | 35 | 6,667 | 3 | 1.75 | 1.25 | 20,001 | 3.7 | 24,667.9 |
| 241.19.32.050 | 32 | 12.5 | 50 | 3,636 | 5.5 | 2.5 | 3 | 19,998 | 6.3 | 22,906.8 |
| 241.19.32.075 | 32 | 12.5 | 75 | 2,222 | 9 | 3.75 | 5.25 | 19,998 | 11.3 | 25,108.6 |
| 241.19.32.100 | 32 | 12.5 | 100 | 1,538 | 13 | 5 | 8 | 19,994 | 17.9 | 27,530.2 |
| 241.19.32.125 | 32 | 12.5 | 125 | 1,250 | 16 | 6.25 | 9.75 | 20,000 | 18.3 | 22,875 |
| 241.19.32.150 | 32 | 12.5 | 150 | 1,053 | 19 | 7.5 | 11.5 | 20,007 | 21.7 | 22,850.1 |
| 241.19.38.040 | 38 | 16 | 40 | 7,143 | 3.5 | 2 | 1.5 | 25,000.5 | 4.5 | 32,143.5 |
| 241.19.38.050 | 38 | 16 | 50 | 5,000 | 5 | 2.5 | 2.5 | 25,000 | 5.9 | 29,500 |
| 241.19.38.075 | 38 | 16 | 75 | 2,778 | 9 | 3.75 | 5.25 | 25,002 | 10.4 | 28,891.2 |
| 241.19.38.100 | 38 | 16 | 100 | 1,923 | 13 | 5 | 8 | 24,999 | 15 | 28,845 |
| 241.19.38.150 | 38 | 16 | 150 | 1,316 | 19 | 7.5 | 11.5 | 25,004 | 22.4 | 29,478.4 |
| 241.19.38.200 | 38 | 16 | 200 | 926 | 27 | 10 | 17 | 25,002 | 29.9 | 27,687.4 |

# ROUND WIRE COMPRESSION SPRING

241.02.

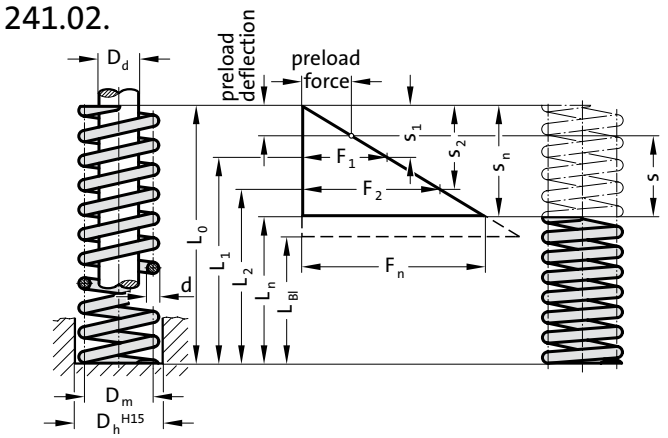

**Material:**
Spring steel wire class C DIN 17.223 sheet 1, drawn and patented.
For highly stressed compression springs and for loads both static and oscillating.

**Execution:**
Manufacturing tolerances to DIN 2095 class 2, load-stabilized, surface homogenized by ball-shot, oiled.
Flattened and ground end coils.

**Note:**
Max. working temperature 100 °C.
All spring sizes listed also available in “making-up-”lengths of 500 mm. When ordering these, please add “500” at the end of the order number – e. g. 241.02.11.040.500.

$D_h$ = diameter of guide sleeve
$D_m$ = mean coil diameter
$D_d$ = diameter of guide pin
d = diameter of spring wire
$L_0$ = free length of spring
$L_1$...$L_n$ = lengths of loaded spring as related to spring forces $F_1$...$F_n$
R = spring rate [N/mm]
$L_{Bl}$ = length of compacted spring (i.-e. wire-to-wire)
$F_1$...$F_n$ = forces [N] as related to lengths of spring $L_1$...$L_n$
$s_1$...$s_n$ = deflection as related to spring forces $F_1$...$F_n$
$i_f$ = number of active coils
s = working stroke of spring – i. e. working deflection

### 241.02. Round wire compression spring

| Order No | $D_h$ | $D_d$ | $D_m$ | d | $L_0$ | R | $s_1$ | $F_1$ [N]* | $l_1$ | $s_2$ | $F_2$ [N]** | $l_2$ | $s_n$ | $F_n$ [N]*** | $L_n$ | $i_f$ |
|---|---|---|---|---|---|---|---|---|---|---|---|---|---|---|---|---|
| 241.02.11.040 | 11 | 6.5 | 8.5 | 1.5 | 40 | 8.08 | 11.3 | 91 | 28.7 | 13.7 | 110 | 26.3 | 16.1 | 130 | 23.9 | 10.5 |
| 241.02.13.055 | 13 | 8.5 | 10.5 | 1.5 | 55 | 3.8 | 20.8 | 79 | 34.2 | 25.2 | 95 | 29.8 | 29.7 | 112 | 25.3 | 12 |
| 241.02.15.040 | 15 | 9.5 | 12 | 2 | 40 | 11.93 | 12.3 | 146 | 27.7 | 15 | 178 | 25 | 17.6 | 210 | 22.4 | 8 |
| 241.02.15.050 | 15 | 9.5 | 12 | 2 | 50 | 10 | 17.5 | 175 | 32.5 | 21.2 | 212 | 28.8 | 25 | 250 | 25 | 9.5 |
| 241.02.16.040 | 16 | 10.5 | 13 | 2 | 40 | 11 | 14 | 154 | 26 | 17 | 187 | 23 | 20 | 220 | 20 | 7 |
| 241.02.18.085 | 18 | 12 | 14.75 | 2.25 | 85 | 5.92 | 30.8 | 182 | 54.2 | 37.4 | 221 | 47.6 | 44 | 260 | 41 | 14 |
| 241.02.19.045 | 19 | 11 | 14.5 | 3 | 45 | 35 | 9.8 | 343 | 35.2 | 11.9 | 416 | 33.1 | 14 | 490 | 31 | 8 |
| 241.02.19.050 | 19 | 11 | 14.5 | 3 | 50 | 30 | 11.2 | 336 | 38.8 | 13.6 | 408 | 36.4 | 16 | 480 | 34 | 8.5 |
| 241.02.19.083 | 19.5 | 9 | 14 | 4 | 83 | 75 | 12.6 | 945 | 70.4 | 15.3 | 1,147 | 67.7 | 18 | 1,350 | 65 | 16 |
| 241.02.20.035 | 20.5 | 10 | 15 | 4 | 35 | 170 | 5.6 | 952 | 29.4 | 6.8 | 1,156 | 28.2 | 8 | 1,360 | 27 | 4.5 |
| 241.02.20.090 | 20.5 | 9 | 14.5 | 4.5 | 90 | 97.8 | 12.3 | 1,202 | 77.7 | 15 | 1,467 | 75 | 17.6 | 1,714 | 72.4 | 4 |
| 241.02.21.035 | 21 | 13.5 | 17 | 2.5 | 35 | 13.32 | 10.5 | 139 | 24.5 | 12.7 | 169 | 22.3 | 15 | 200 | 20 | 6 |
| 241.02.21.040 | 21 | 12 | 16.25 | 3 | 40 | 32.1 | 9.8 | 314 | 30.2 | 11.9 | 381 | 28.1 | 14 | 450 | 26 | 5.5 |
| 241.02.22.095 | 22 | 14.5 | 18 | 2.5 | 95 | 4.1 | 34.2 | 140 | 60.8 | 41.5 | 170 | 53.5 | 48.8 | 200 | 46.2 | 17 |
| 241.02.22.040 | 22.5 | 12 | 17 | 4 | 40 | 105.5 | 7.7 | 812 | 32.3 | 9.3 | 981 | 30.7 | 11 | 1,160 | 29 | 5 |
| 241.02.23.045 | 23 | 14.5 | 18.5 | 3 | 45 | 25.7 | 15 | 385 | 30 | 18.2 | 467 | 26.8 | 21.4 | 550 | 23.6 | 5 |
| 241.02.23.050 | 23 | 12.5 | 17.5 | 4 | 50 | 74.3 | 11 | 817 | 39 | 13.3 | 988 | 36.7 | 15.6 | 1,160 | 34.4 | 6.5 |
| 241.02.26.024 | 26.5 | 16 | 21 | 4 | 24 | 133.2 | 5 | 666 | 19 | 6.1 | 812 | 17.9 | 7.2 | 960 | 16.8 | 2 |
| 241.02.30.070 | 30 | 13 | 20.8 | 7 | 70 | 341 | 7.7 | 2,625 | 62.3 | 9.3 | 3,171 | 60.7 | 11 | 3,750 | 59 | 8 |
| 241.02.32.070 | 32 | 21 | 26 | 4 | 70 | 24.2 | 23.8 | 575 | 46.2 | 28.9 | 700 | 41.1 | 34 | 822 | 36 | 6 |
| 241.02.32.150 | 32 | 16 | 23.5 | 6.5 | 150 | 103.6 | 19.6 | 2,030 | 130.4 | 23.8 | 2,465 | 126 | 28 | 2,900 | 122 | 14 |
| 241.02.34.125 | 34 | 19 | 26 | 6 | 125 | 67.2 | 22.4 | 1,505 | 102.6 | 27.2 | 1,827 | 97.8 | 32 | 2,150 | 93 | 11.5 |
| 241.02.44.130 | 44 | 25 | 34 | 8 | 130 | 108.2 | 25.2 | 2,726 | 104.8 | 30.6 | 3,310 | 99.4 | 36 | 3,895 | 94 | 10 |
| 241.02.44.200 | 44 | 25 | 34 | 7.5 | 200 | 61.8 | 43.4 | 2,679 | 156.6 | 52.7 | 3,254 | 147.3 | 62 | 3,847 | 137.7 | 17 |
| 241.02.48.067 | 48 | 25 | 36 | 10 | 67 | 640 | 6.3 | 4,032 | 60.7 | 7.6 | 4,864 | 59.4 | 9 | 5,760 | 58 | 3.5 |
| 241.02.49.050 | 49 | 29 | 38.5 | 8.5 | 50 | 337 | 7.7 | 2,594 | 42.3 | 9.3 | 3,134 | 40.7 | 11 | 3,707 | 39 | 2.5 |
| 241.02.55.200 | 55 | 30 | 42 | 11 | 200 | 157 | 30.1 | 4,725 | 169.9 | 36.6 | 5,746 | 163.4 | 43 | 6,750 | 157 | 13 |
| 241.02.58.050 | 58 | 39 | 48 | 8 | 50 | 151.2 | 9.8 | 1,481 | 40.2 | 11.9 | 1,799 | 38.1 | 14 | 2,117 | 36 | 2.5 |
| 241.02.63.180 | 63 | 38 | 50 | 11 | 180 | 121 | 30.1 | 3,642 | 149.9 | 36.6 | 4,428 | 143.4 | 43 | 5,203 | 137 | 10 |

* = long spring life; ** = medium spring life; *** = max. spring loading

# DISC SPRING DIN 2093

242.01.

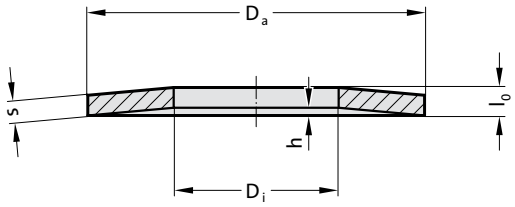


**Material:**
50 CrV 4 Vanadium Spring Steel

**Note:**
FIBRO Disc Springs 242.01. are made from 50 CrV 4 premier grade spring steel. This “classic” spring material guarantes optimal performance levels within the temperature range from –15 °C to +150 °C. “Hot pressetting” allows working temperatures from –25 °C to +200 °C.

$D_a$ = outside diameter of spring
$D_i$ = diameter of hole
s = crossectional thickness of spring
h = concavity of free spring
$l_0$ =total height of free spring
f = deflection of spring, caused by load F
F = load F [N], causing deflection f

**242.01. Disc spring DIN 2093**

| Order No | in accord. with DIN 2093 series | $D_a$ h12 | $D_i$ H12 | s | h | $l_0$ | $f_1$= 0,2 h | $F_1$ [N] | $f_2$= 0,4 h | $F_2$ [N] | $f_3$= 0,6 h | F3 | $f_4$= 0,7 h | $F_4$ [N] | $f_5$= 0,8 h | $F_5$ [N] |
|---|---|---|---|---|---|---|---|---|---|---|---|---|---|---|---|---|
| 242.01.080.032.040 | | 8 | 3.2 | 0.4 | 0.2 | 0.6 | 0.04 | 58 | 0.08 | 110 | 0.12 | 160 | 0.14 | 180 | 0.16 | 200 |
| 242.01.100.052.040 | B | 10 | 5.2 | 0.4 | 0.3 | 0.7 | 0.06 | 73 | 0.12 | 134 | 0.18 | 180 | 0.21 | 200 | 0.24 | 220 |
| 242.01.125.062.050 | B | 12.5 | 6.2 | 0.5 | 0.35 | 0.85 | 0.07 | 100 | 0.14 | 180 | 0.21 | 250 | 0.24 | 280 | 0.28 | 310 |
| 242.01.140.072.080 | A | 14 | 7.2 | 0.8 | 0.3 | 1.1 | 0.06 | 230 | 0.12 | 450 | 0.18 | 660 | 0.21 | 770 | 0.24 | 870 |
| 242.01.150.052.070 | | 15 | 5.2 | 0.7 | 0.4 | 1.1 | 0.08 | 180 | 0.16 | 340 | 0.24 | 470 | 0.28 | 540 | 0.32 | 610 |
| 242.01.160.082.060 | B | 16 | 8.2 | 0.6 | 0.45 | 1.05 | 0.09 | 145 | 0.18 | 260 | 0.27 | 360 | 0.31 | 400 | 0.36 | 440 |
| 242.01.160.082.090 | A | 16 | 8.2 | 0.9 | 0.35 | 1.25 | 0.07 | 300 | 0.14 | 580 | 0.21 | 850 | 0.24 | 970 | 0.28 | 1,100 |
| 242.01.180.092.100 | A | 18 | 9.2 | 1 | 0.4 | 1.4 | 0.08 | 370 | 0.16 | 720 | 0.24 | 1,050 | 0.28 | 1,200 | 0.32 | 1,350 |
| 242.01.200.102.080 | B | 20 | 10.2 | 0.8 | 0.55 | 1.35 | 0.11 | 250 | 0.22 | 470 | 0.33 | 650 | 0.38 | 730 | 0.44 | 800 |
| 242.01.200.102.090 | | 20 | 10.2 | 0.9 | 0.55 | 1.45 | 0.11 | 340 | 0.22 | 640 | 0.33 | 900 | 0.38 | 1,000 | 0.44 | 1,150 |
| 242.01.200.102.110 | A | 20 | 10.2 | 1.1 | 0.45 | 1.55 | 0.09 | 450 | 0.18 | 870 | 0.27 | 1,350 | 0.31 | 1,450 | 0.36 | 1,650 |
| 242.01.230.122.125 | | 23 | 12.2 | 1.25 | 0.6 | 1.85 | 0.12 | 710 | 0.24 | 1,360 | 0.36 | 1,960 | 0.42 | 2,240 | 0.48 | 2,520 |
| 242.01.250.122.150 | A | 25 | 12.2 | 1.5 | 0.55 | 2.05 | 0.11 | 860 | 0.22 | 1,650 | 0.33 | 2,450 | 0.38 | 2,800 | 0.44 | 3,100 |
| 242.01.250.122.100 | | 25 | 12.2 | 1 | 0.6 | 1.6 | 0.12 | 320 | 0.24 | 600 | 0.36 | 840 | 0.42 | 950 | 0.48 | 1,050 |
| 242.01.280.142.100 | B | 28 | 14.2 | 1 | 0.8 | 1.8 | 0.16 | 400 | 0.32 | 720 | 0.48 | 970 | 0.56 | 1,100 | 0.64 | 1,200 |
| 242.01.280.142.150 | A | 28 | 14.2 | 1.5 | 0.65 | 2.15 | 0.13 | 850 | 0.26 | 1,650 | 0.39 | 2,400 | 0.45 | 2,700 | 0.52 | 3,100 |
| 242.01.315.163.125 | B | 31.5 | 16.3 | 1.25 | 0.9 | 2.15 | 0.18 | 660 | 0.36 | 1,200 | 0.54 | 1,650 | 0.63 | 1,850 | 0.72 | 2,000 |
| 242.01.315.163.175 | A | 31.5 | 16.3 | 1.75 | 0.7 | 2.45 | 0.14 | 1,150 | 0.28 | 2,200 | 0.42 | 3,200 | 0.49 | 3,700 | 0.56 | 4,200 |
| 242.01.355.183.200 | A | 35.5 | 18.3 | 2 | 0.8 | 2.8 | 0.16 | 1,550 | 0.32 | 3,000 | 0.48 | 4,300 | 0.56 | 5,000 | 0.64 | 5,600 |
| 242.01.400.142.150 | | 40 | 14.2 | 1.5 | 1.25 | 2.75 | 0.25 | 950 | 0.5 | 1,700 | 0.75 | 2,200 | 0.87 | 2,500 | 1 | 2,700 |
| 242.01.400.204.225 | A | 40 | 20.4 | 2.25 | 0.9 | 3.15 | 0.18 | 1,900 | 0.36 | 3,700 | 0.54 | 5,400 | 0.63 | 5,200 | 0.72 | 7,000 |
| 242.01.450.224.250 | A | 45 | 22.4 | 2.5 | 1 | 3.5 | 0.2 | 2,300 | 0.4 | 4,500 | 0.6 | 6,400 | 0.7 | 7,400 | 0.8 | 8,500 |
| 242.01.500.183.150 | | 50 | 18.3 | 1.5 | 1.8 | 3.3 | 0.36 | 1,200 | 0.72 | 2,000 | 1.08 | 2,400 | 1.26 | 2,600 | 1.44 | 2,700 |
| 242.01.500.254.250 | | 50 | 25.4 | 2.5 | 1.4 | 3.9 | 0.28 | 2,850 | 0.56 | 5,350 | 0.84 | 7,600 | 0.98 | 8,650 | 1.12 | 9,650 |
| 242.01.500.254.300 | A | 50 | 25.4 | 3 | 1.1 | 4.1 | 0.22 | 3,500 | 0.44 | 6,800 | 0.66 | 10,000 | 0.77 | 11,500 | 0.88 | 13,000 |
| 242.01.560.285.200 | B | 56 | 28.5 | 2 | 1.6 | 3.6 | 0.32 | 1,600 | 0.64 | 2,900 | 0.96 | 3,900 | 1.12 | 4,300 | 1.28 | 4,700 |
| 242.01.600.204.200 | | 60 | 20.4 | 2 | 2.1 | 4.1 | 0.42 | 2,000 | 0.84 | 3,400 | 1.26 | 4,300 | 1.47 | 4,700 | 1.68 | 5,000 |

# ELASTOMER SPRINGS
# SPRING AND SPACER UNITS
# ACCESSORIES

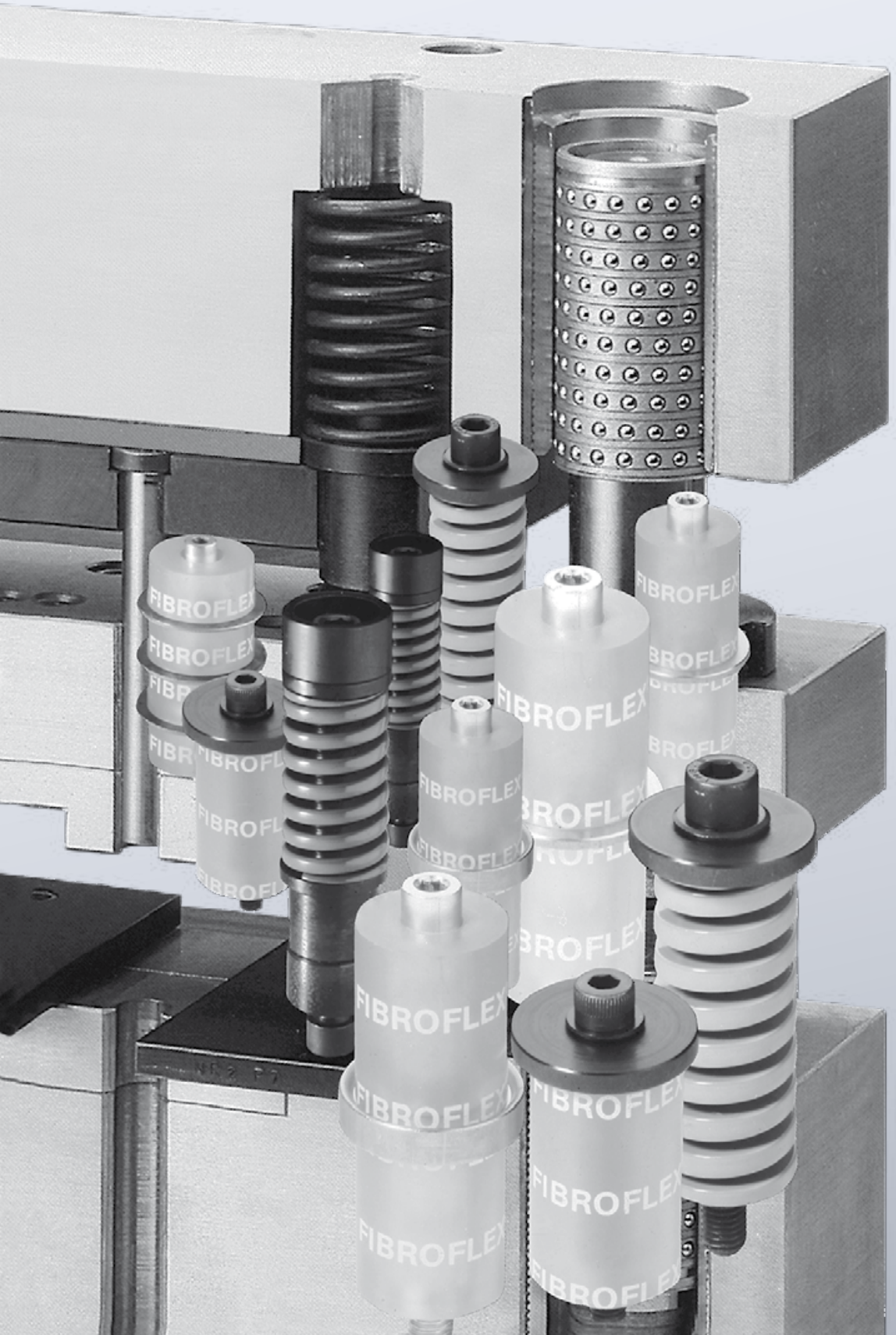

# FIBROFLEX®-ELASTOMER SPRING FOR FIBROFLEX®-SPRING SYSTEM

**Mounting example**

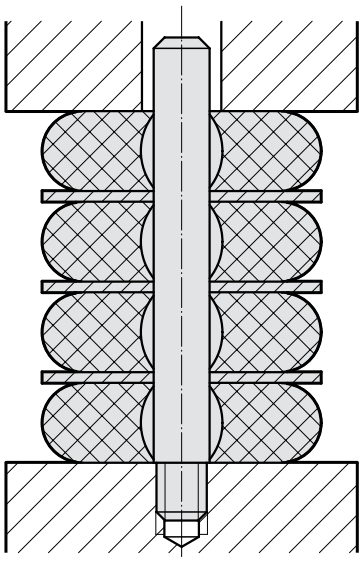

244.1.

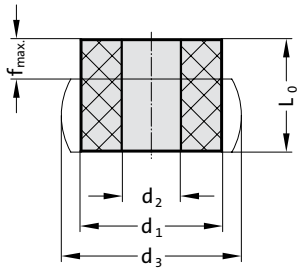


**Description:**
FIBROFLEX® Spring Systems represent a finely graded range of elastomer spring units (material: polyurethane) exhibiting particular suitability for all stamping dies and related tools.

The 244.-Systems comprise FIBROFLEX® Spring Elements 244.1., available in three Shore hardnesses. With the aid of Stacking Washers 244.4. and Guide Pins 244.5., the elements can be stacked.
Note that stacking with interposed stacking washers results in the addition of the individual spring deflections – without addition of the spring forces.

**Note:**
☞ Physical and chemical properties of FIBROFLEX®-Elastomer – see at the beginning of chapter G.
Dowel pins (235./2351.1.) or guide pins (244.5.), recommended for stacks higher than 1,5 x $d_2$.

### 244.1. FIBROFLEX®-Elastomer spring for FIBROFLEX®-Spring system

| Order No | Spring hardness | $d_1$ | $d_2$ | $d_3$ | $L_0$ | f max. | F max. [N] |
|---|---|---|---|---|---|---|---|
| 244.1.16.5 | 80 Shore A | 16 | 6.5 | 20 | 7.5 | 2.6 | 1,060 |
| 244.1.20.5 | 80 Shore A | 20 | 8.5 | 26 | 10 | 3.5 | 1,580 |
| 244.1.25.5 | 80 Shore A | 25 | 10.5 | 32 | 12.5 | 4.3 | 2,670 |
| 244.1.32.5 | 80 Shore A | 32 | 13.5 | 40 | 15 | 5.2 | 4,500 |
| 244.1.40.5 | 80 Shore A | 40 | 13.5 | 50 | 17.5 | 6.1 | 7,200 |
| 244.1.16.6 | 90 Shore A | 16 | 6.5 | 20 | 7.5 | 2.2 | 1,900 |
| 244.1.20.6 | 90 Shore A | 20 | 8.5 | 26 | 10 | 3 | 2,650 |
| 244.1.25.6 | 90 Shore A | 25 | 10.5 | 32 | 12.5 | 3.7 | 4,400 |
| 244.1.32.6 | 90 Shore A | 32 | 13.5 | 40 | 15 | 4.5 | 6,550 |
| 244.1.40.6 | 90 Shore A | 40 | 13.5 | 50 | 17.5 | 5.2 | 11,200 |
| 244.1.16.7 | 95 Shore A | 16 | 6.5 | 20 | 7.5 | 1.9 | 2,500 |
| 244.1.20.7 | 95 Shore A | 20 | 8.5 | 26 | 10 | 2.5 | 3,500 |
| 244.1.25.7 | 95 Shore A | 25 | 10.5 | 32 | 12.5 | 3.1 | 4,500 |
| 244.1.32.7 | 95 Shore A | 32 | 13.5 | 40 | 15 | 3.9 | 7,800 |
| 244.1.40.7 | 95 Shore A | 40 | 13.5 | 50 | 17.5 | 4.4 | 13,500 |

# FIBROFLEX®-ELASTOMER SPRING FOR FIBROFLEX®-SPRING SYSTEM

### 244.1.16. – ø 16

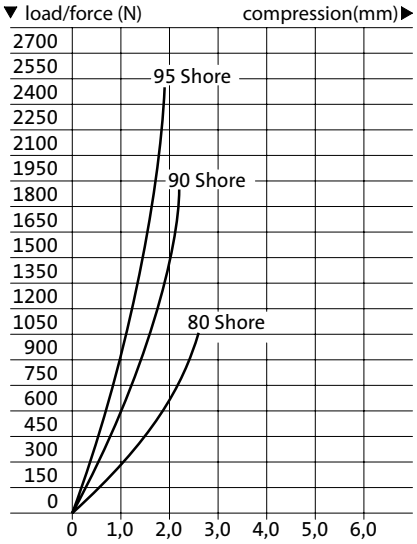


### 244.1.20. – ø 20

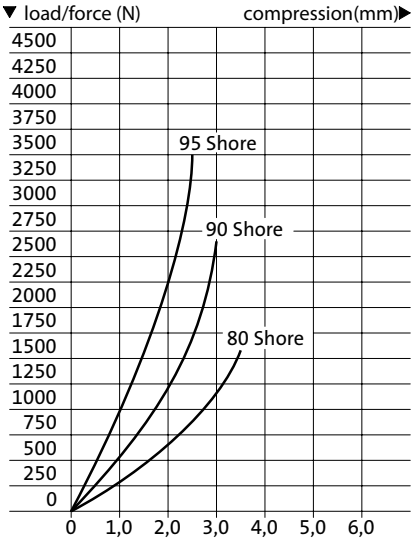


### 244.1.25. – ø 25

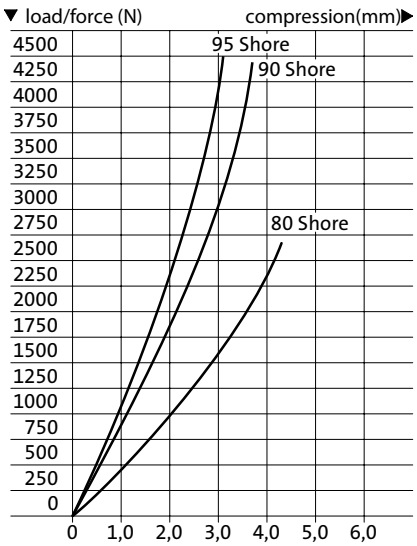


### 244.1.32. – ø 32

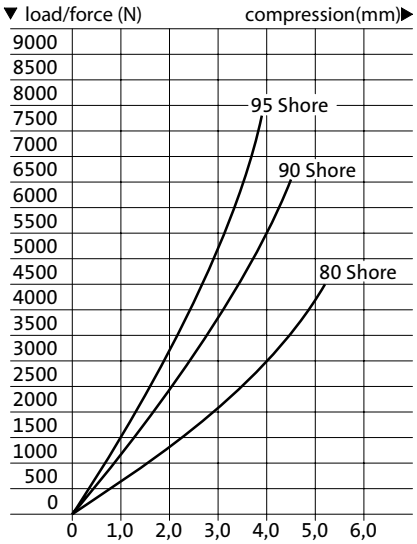


### 244.1.40. – ø 40

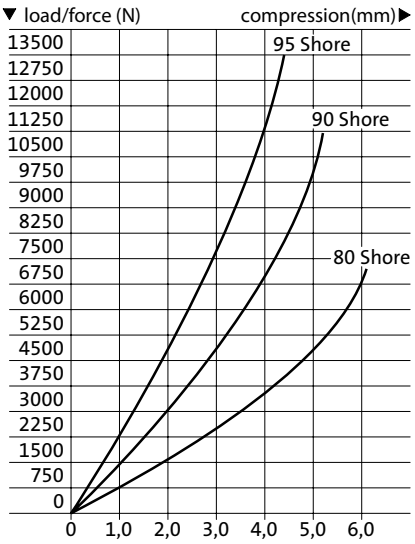

# FIBROFLEX®-TUBULAR SPRING ELEMENT 80 SHORE A, TO DIN ISO 10069-1

246.5.

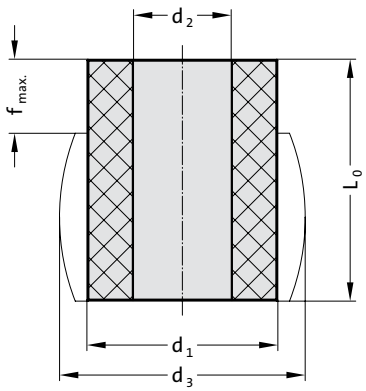


**Description:**
FIBROFLEX® Spring Elements are made from highly elastic polyurethane elastomers.
Shore hardness is the most significant rating of the various FIBROFLEX®-Elements. Shore hardness ratings are symbolized by distinctive colour coding.
Correct selection of Shore hardness has a fundamental bearing on the success of FIBROFLEX®-applications.

**Material:**
Polyurethan 80 Shore A
Colour: green

**Note:**
The physical properties of polyurethane elastomers means that they have a tendency to settle. The extent of such settlement is dependent on the internal heat of friction, speed and number of load changes, the spring travel and the Shore hardness.
Settlement may be as much as 4 to 7% of the spring length $L_0$.

**246.5. FIBROFLEX®-Tubular spring element 80 Shore A, to DIN ISO 10069-1**

| Order No | $d_1$ | $L_0$ | $d_2$ | $d_3$ | f max. | F max. [N] |
|---|---|---|---|---|---|---|
| 246.5.016.012 | 16 | 12.5 | 6.5 | 21 | 4.3 | 1,020 |
| 246.5.016.016 | 16 | 16 | 6.5 | 21 | 5.6 | 980 |
| 246.5.016.020 | 16 | 20 | 6.5 | 21 | 7 | 950 |
| 246.5.016.025 | 16 | 25 | 6.5 | 21 | 8.7 | 940 |
| 246.5.020.016 | 20 | 16 | 8.5 | 26 | 5.6 | 1,530 |
| 246.5.020.020 | 20 | 20 | 8.5 | 26 | 7 | 1,510 |
| 246.5.020.025 | 20 | 25 | 8.5 | 26 | 8.7 | 1,500 |
| 246.5.020.032 | 20 | 32 | 8.5 | 26 | 10.6 | 1,490 |
| 246.5.025.020 | 25 | 20 | 10.5 | 32 | 7 | 2,600 |
| 246.5.025.025 | 25 | 25 | 10.5 | 32 | 8.7 | 2,550 |
| 246.5.025.032 | 25 | 32 | 10.5 | 32 | 10.6 | 2,520 |
| 246.5.025.040 | 25 | 40 | 10.5 | 32 | 14 | 2,500 |
| 246.5.032.032 | 32 | 32 | 13.5 | 42 | 10.6 | 3,900 |
| 246.5.032.040 | 32 | 40 | 13.5 | 42 | 14 | 3,850 |
| 246.5.032.050 | 32 | 50 | 13.5 | 42 | 17.5 | 3,820 |
| 246.5.032.063 | 32 | 63 | 13.5 | 42 | 22 | 3,800 |
| 246.5.040.032 | 40 | 32 | 13.5 | 52 | 10.6 | 6,700 |
| 246.5.040.040 | 40 | 40 | 13.5 | 52 | 14 | 6,600 |
| 246.5.040.050 | 40 | 50 | 13.5 | 52 | 17.5 | 6,550 |
| 246.5.040.063 | 40 | 63 | 13.5 | 52 | 22 | 6,500 |
| 246.5.040.080 | 40 | 80 | 13.5 | 52 | 28 | 6,480 |
| 246.5.050.032 | 50 | 32 | 17 | 65 | 10.6 | 10,800 |
| 246.5.050.040 | 50 | 40 | 17 | 65 | 14 | 10,400 |
| 246.5.050.050 | 50 | 50 | 17 | 65 | 17.5 | 10,200 |
| 246.5.050.063 | 50 | 63 | 17 | 65 | 22 | 10,000 |
| 246.5.050.080 | 50 | 80 | 17 | 65 | 28 | 9,950 |
| 246.5.050.100 | 50 | 100 | 17 | 65 | 35 | 9,900 |
| 246.5.063.032 | 63 | 32 | 17 | 81 | 11.2 | 18,650 |
| 246.5.063.040 | 63 | 40 | 17 | 81 | 14 | 18,000 |
| 246.5.063.050 | 63 | 50 | 17 | 81 | 17.5 | 17,500 |
| 246.5.063.063 | 63 | 63 | 17 | 81 | 22 | 17,000 |
| 246.5.063.080 | 63 | 80 | 17 | 81 | 28 | 16,500 |

| Order No | $d_1$ | $L_0$ | $d_2$ | $d_3$ | f max. | F max. [N] |
|---|---|---|---|---|---|---|
| 246.5.063.100 | 63 | 100 | 17 | 81 | 35 | 16,200 |
| 246.5.063.125 | 63 | 125 | 17 | 81 | 43.7 | 16,000 |
| 246.5.080.032 | 80 | 32 | 21 | 104 | 11.2 | 31,500 |
| 246.5.080.040 | 80 | 40 | 21 | 104 | 14 | 30,100 |
| 246.5.080.050 | 80 | 50 | 21 | 104 | 17.5 | 29,900 |
| 246.5.080.063 | 80 | 63 | 21 | 104 | 22 | 28,800 |
| 246.5.080.080 | 80 | 80 | 21 | 104 | 28 | 28,300 |
| 246.5.080.100 | 80 | 100 | 21 | 104 | 35 | 28,100 |
| 246.5.080.125 | 80 | 125 | 21 | 104 | 43.7 | 28,000 |
| 246.5.100.032 | 100 | 32 | 21 | 130 | 10.6 | 56,000 |
| 246.5.100.040 | 100 | 40 | 21 | 130 | 14 | 52,000 |
| 246.5.100.050 | 100 | 50 | 21 | 130 | 17.5 | 50,000 |
| 246.5.100.063 | 100 | 63 | 21 | 130 | 22 | 47,500 |
| 246.5.100.080 | 100 | 80 | 21 | 130 | 28 | 45,000 |
| 246.5.100.100 | 100 | 100 | 21 | 130 | 35 | 43,300 |
| 246.5.100.125 | 100 | 125 | 21 | 130 | 43.7 | 41,500 |
| 246.5.125.032 | 125 | 32 | 27 | 160 | 10.6 | 92,000 |
| 246.5.125.040 | 125 | 40 | 27 | 160 | 14 | 85,000 |
| 246.5.125.050 | 125 | 50 | 27 | 160 | 17.5 | 80,000 |
| 246.5.125.063 | 125 | 63 | 27 | 160 | 22 | 75,000 |
| 246.5.125.080 | 125 | 80 | 27 | 160 | 28 | 71,000 |
| 246.5.125.100 | 125 | 100 | 27 | 160 | 35 | 70,500 |
| 246.5.125.125 | 125 | 125 | 27 | 160 | 43.7 | 70,000 |
| 246.5.125.160 | 125 | 160 | 27 | 160 | 56 | 68,000 |

246.5.016.
Ø 16/80 Shore A

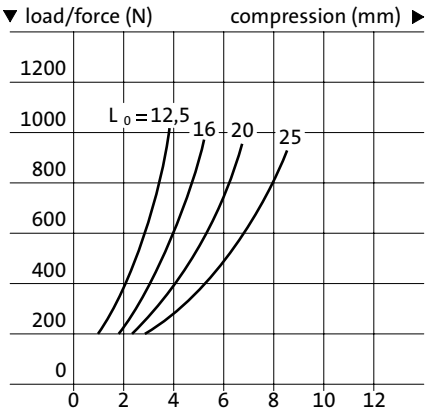

# FIBROFLEX®-TUBULAR SPRING ELEMENT 80 SHORE A, TO DIN ISO 10069-1

## 246.5.020.
## Ø 20/80 Shore A

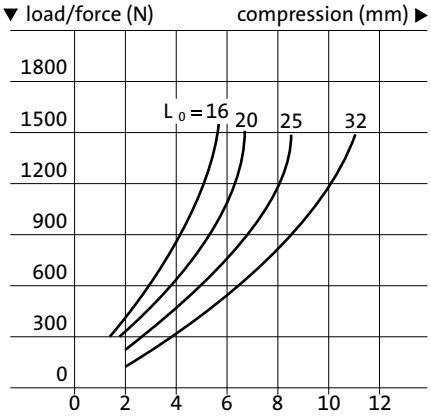


## 246.5.025.
## Ø 25/80 Shore A

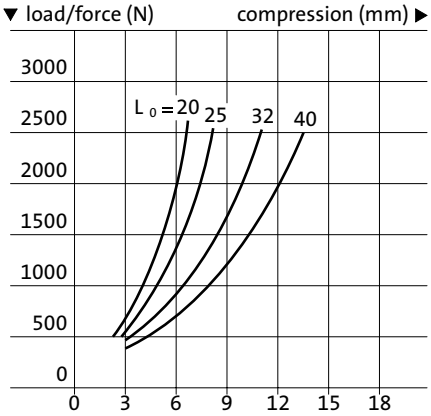


## 246.5.032.
## Ø 32/80 Shore A

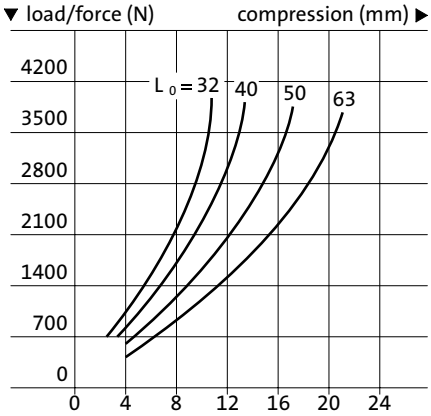


## 246.5.040.
## Ø 40/80 Shore A

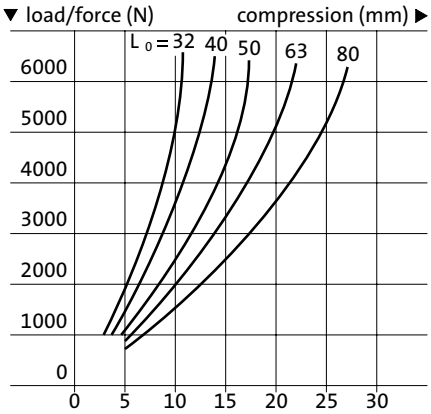


## 246.5.050.
## Ø 50/80 Shore A

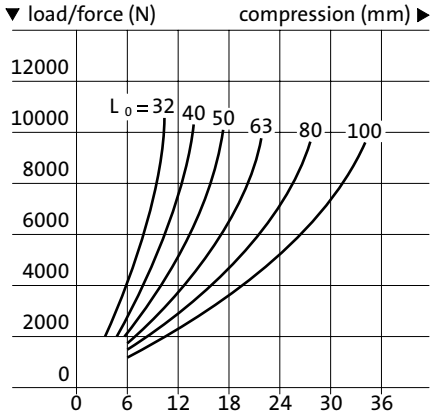


## 246.5.063.
## Ø 63/80 Shore A

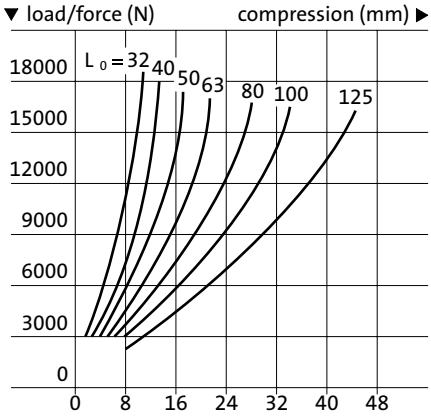


## 246.5.080.
## Ø 80/80 Shore A

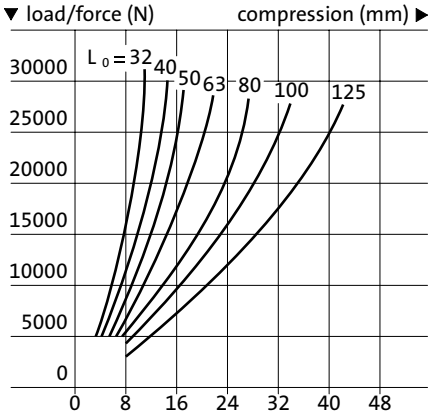


## 246.5.100.
## Ø 100/80 Shore A

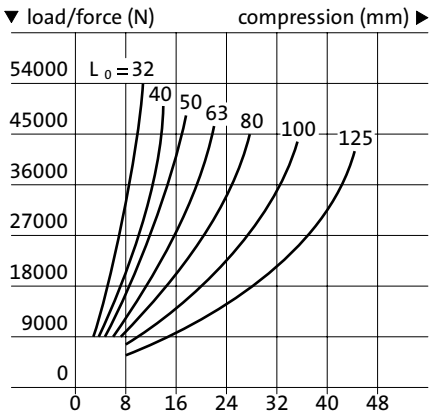


## 246.5.125.
## Ø 125/80 Shore A

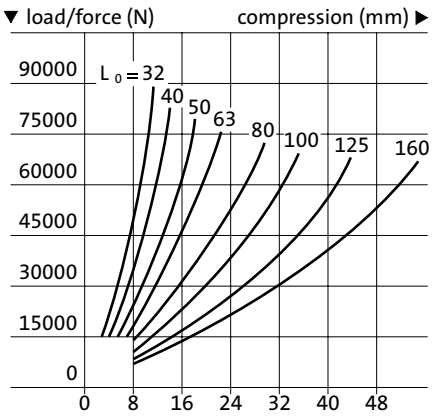

# FIBROFLEX®-TUBULAR SPRING ELEMENT 90 SHORE A, TO DIN ISO 10069-1

246.6.

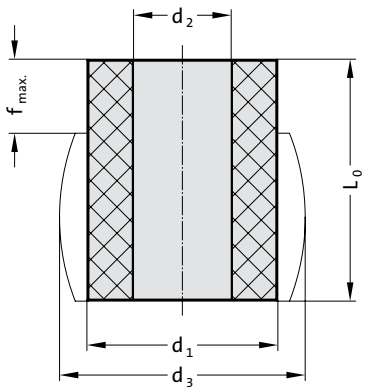


**Description:**
FIBROFLEX® Spring Elements are made from highly elastic polyurethane elastomers.
Shore hardness is the most significant rating of the various FIBROFLEX®-Elements. Shore hardness ratings are symbolized by distinctive colour coding.
Correct selection of Shore hardness has a fundamental bearing on the success of FIBROFLEX®-applications.

**Material:**
Polyurethan 90 Shore A
Colour: yellow

**Note:**
The physical properties of polyurethane elastomers means that they have a tendency to settle. The extent of such settlement is dependent on the internal heat of friction, speed and number of load changes, the spring travel and the Shore hardness.
Settlement may be as much as 4 to 7% of the spring length $L_0$.

**246.6. FIBROFLEX®-Tubular spring element 90 Shore A, to DIN ISO 10069-1**

| Order No | $d_1$ | $l_0$ | $d_2$ | $d_3$ | f max. | F max. [N] |
|---|---|---|---|---|---|---|
| 246.6.016.012 | 16 | 12.5 | 6.5 | 21 | 3.6 | 1,680 |
| 246.6.016.016 | 16 | 16 | 6.5 | 21 | 4.8 | 1,650 |
| 246.6.016.020 | 16 | 20 | 6.5 | 21 | 6 | 1,620 |
| 246.6.016.025 | 16 | 25 | 6.5 | 21 | 7.5 | 1,580 |
| 246.6.020.016 | 20 | 16 | 8.5 | 26 | 4.8 | 2,600 |
| 246.6.020.020 | 20 | 20 | 8.5 | 26 | 6 | 2,550 |
| 246.6.020.025 | 20 | 25 | 8.5 | 26 | 7.5 | 2,530 |
| 246.6.020.032 | 20 | 32 | 8.5 | 26 | 9.6 | 2,500 |
| 246.6.025.020 | 25 | 20 | 10.5 | 32 | 6 | 4,300 |
| 246.6.025.025 | 25 | 25 | 10.5 | 32 | 7.5 | 4,200 |
| 246.6.025.032 | 25 | 32 | 10.5 | 32 | 9.6 | 4,150 |
| 246.6.025.040 | 25 | 40 | 10.5 | 32 | 12 | 4,120 |
| 246.6.032.032 | 32 | 32 | 13.5 | 42 | 9.6 | 6,400 |
| 246.6.032.040 | 32 | 40 | 13.5 | 42 | 12 | 6,350 |
| 246.6.032.050 | 32 | 50 | 13.5 | 42 | 15 | 6,300 |
| 246.6.032.063 | 32 | 63 | 13.5 | 42 | 18.9 | 6,250 |
| 246.6.040.032 | 40 | 32 | 13.5 | 52 | 9.6 | 11,000 |
| 246.6.040.040 | 40 | 40 | 13.5 | 52 | 12 | 10,900 |
| 246.6.040.050 | 40 | 50 | 13.5 | 52 | 15 | 10,800 |
| 246.6.040.063 | 40 | 63 | 13.5 | 52 | 18.9 | 10,750 |
| 246.6.040.080 | 40 | 80 | 13.5 | 52 | 24 | 10,700 |
| 246.6.050.032 | 50 | 32 | 17 | 65 | 9.6 | 17,400 |
| 246.6.050.040 | 50 | 40 | 17 | 65 | 12 | 17,300 |
| 246.6.050.050 | 50 | 50 | 17 | 65 | 15 | 17,000 |
| 246.6.050.063 | 50 | 63 | 17 | 65 | 18.9 | 16,650 |
| 246.6.050.080 | 50 | 80 | 17 | 65 | 24 | 16,500 |
| 246.6.050.100 | 50 | 100 | 17 | 65 | 30 | 16,400 |
| 246.6.063.032 | 63 | 32 | 17 | 81 | 9.6 | 30,100 |
| 246.6.063.040 | 63 | 40 | 17 | 81 | 12 | 29,500 |
| 246.6.063.050 | 63 | 50 | 17 | 81 | 15 | 28,900 |
| 246.6.063.063 | 63 | 63 | 17 | 81 | 18.9 | 28,000 |
| 246.6.063.080 | 63 | 80 | 17 | 81 | 24 | 27,500 |

| Order No | $d_1$ | $l_0$ | $d_2$ | $d_3$ | f max. | F max. [N] |
|---|---|---|---|---|---|---|
| 246.6.063.100 | 63 | 100 | 17 | 81 | 30 | 27,300 |
| 246.6.063.125 | 63 | 125 | 17 | 81 | 37.5 | 26,800 |
| 246.6.080.032 | 80 | 32 | 21 | 104 | 9.6 | 53,000 |
| 246.6.080.040 | 80 | 40 | 21 | 104 | 12 | 50,500 |
| 246.6.080.050 | 80 | 50 | 21 | 104 | 15 | 48,000 |
| 246.6.080.063 | 80 | 63 | 21 | 104 | 18.9 | 46,500 |
| 246.6.080.080 | 80 | 80 | 21 | 104 | 24 | 45,500 |
| 246.6.080.100 | 80 | 100 | 21 | 104 | 30 | 44,900 |
| 246.6.080.125 | 80 | 125 | 21 | 104 | 37.5 | 44,000 |
| 246.6.100.032 | 100 | 32 | 21 | 130 | 9.6 | 90,000 |
| 246.6.100.040 | 100 | 40 | 21 | 130 | 12 | 84,800 |
| 246.6.100.050 | 100 | 50 | 21 | 130 | 15 | 81,000 |
| 246.6.100.063 | 100 | 63 | 21 | 130 | 18.9 | 78,000 |
| 246.6.100.080 | 100 | 80 | 21 | 130 | 24 | 75,000 |
| 246.6.100.100 | 100 | 100 | 21 | 130 | 30 | 73,000 |
| 246.6.100.125 | 100 | 125 | 21 | 130 | 37.5 | 71,000 |
| 246.6.125.032 | 125 | 32 | 27 | 160 | 9.6 | 150,000 |
| 246.6.125.040 | 125 | 40 | 27 | 160 | 12 | 142,500 |
| 246.6.125.050 | 125 | 50 | 27 | 160 | 15 | 132,000 |
| 246.6.125.063 | 125 | 63 | 27 | 160 | 18.9 | 125,000 |
| 246.6.125.080 | 125 | 80 | 27 | 160 | 24 | 118,000 |
| 246.6.125.100 | 125 | 100 | 27 | 160 | 30 | 115,000 |
| 246.6.125.125 | 125 | 125 | 27 | 160 | 37.5 | 113,000 |
| 246.6.125.160 | 125 | 160 | 27 | 160 | 48 | 111,300 |

246.6.016.
Ø 16/90 Shore A

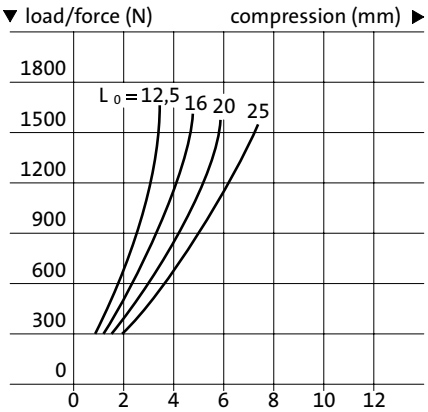

# FIBROFLEX®-TUBULAR SPRING ELEMENT 90 SHORE A, TO DIN ISO 10069-1

## 246.6.020.
## Ø 20/90 Shore A

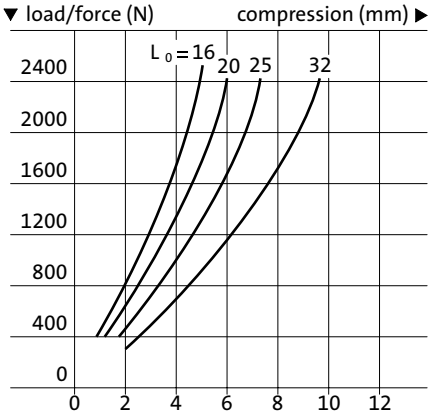


## 246.6.025.
## Ø 25/90 Shore A

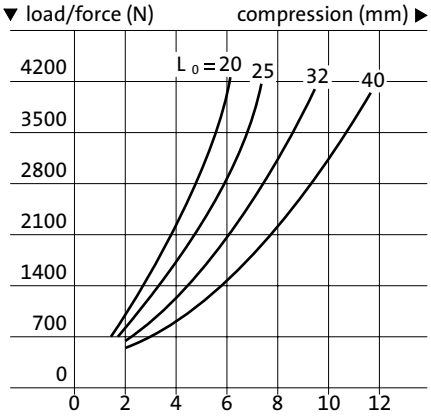


## 246.6.032.
## Ø 32/90 Shore A

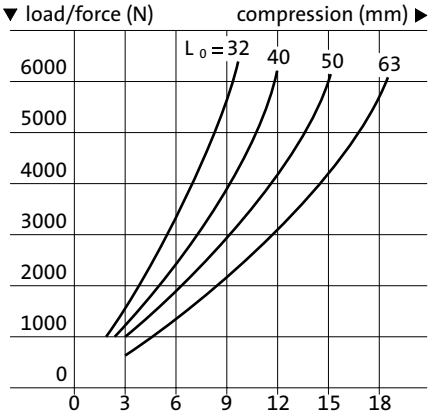


## 246.6.040.
## Ø 40/90 Shore A

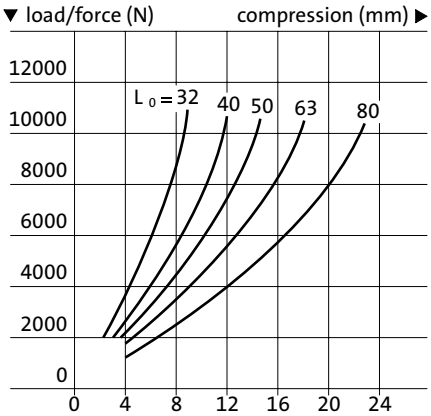


## 246.6.050.
## Ø 50/90 Shore A

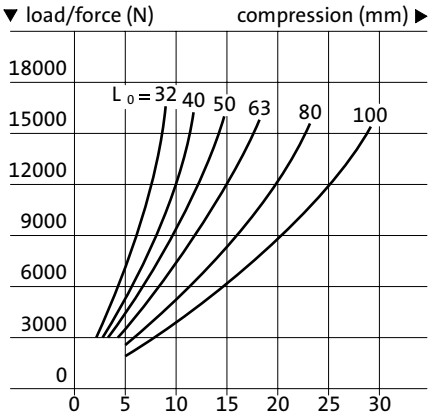


## 246.6.063.
## Ø 63/90 Shore A

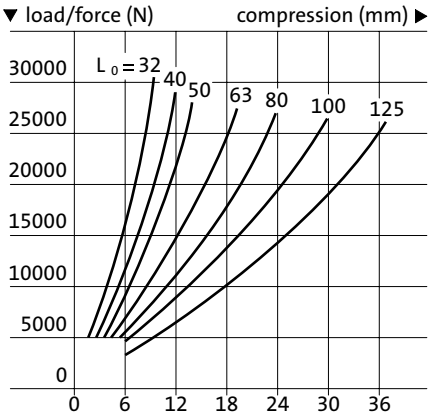


## 246.6.080.
## Ø 80/90 Shore A

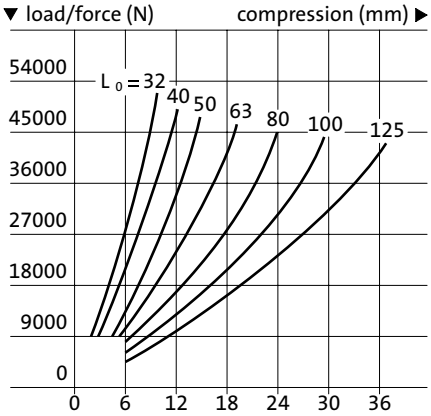


## 246.6.100.
## Ø 100/90 Shore A

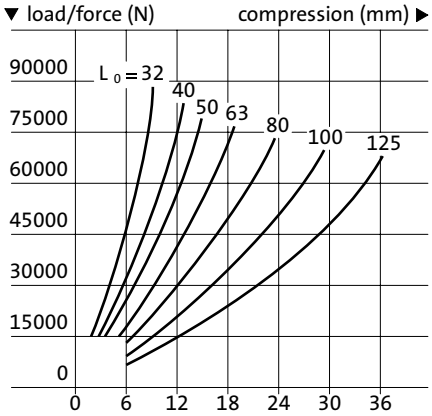


## 246.6.125.
## Ø 125/90 Shore A

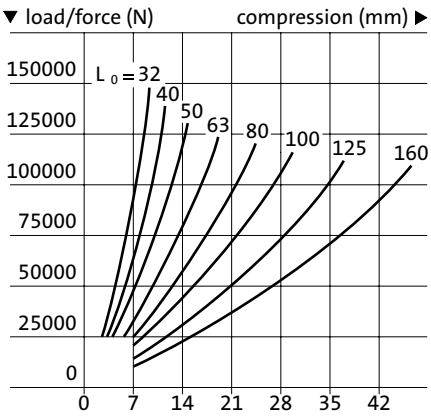

# FIBROFLEX®-TUBULAR SPRING ELEMENT 95 SHORE A, TO DIN ISO 10069-1

246.7.

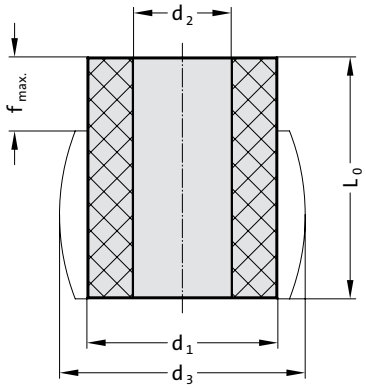


**Description:**
FIBROFLEX® Spring Elements are made from highly elastic polyurethane elastomers.
Shore hardness is the most significant rating of the various FIBROFLEX®-Elements. Shore hardness ratings are symbolized by distinctive colour coding.
Correct selection of Shore hardness has a fundamental bearing on the success of FIBROFLEX®-applications.

**Material:**
Polyurethan 95 Shore A
Colour: red

**Note:**
The physical properties of polyurethane elastomers means that they have a tendency to settle. The extent of such settlement is dependent on the internal heat of friction, speed and number of load changes, the spring travel and the Shore hardness.
Settlement may be as much as 4 to 7% of the spring length $L_0$.

### 246.7. FIBROFLEX®-Tubular spring element 95 Shore A, to DIN ISO 10069-1

| Order No | $d_1$ | $L_0$ | $d_2$ | $d_3$ | f max. | F max. [N] |
|---|---|---|---|---|---|---|
| 246.7.016.012 | 16 | 12.5 | 6.5 | 21 | 3.1 | 2,000 |
| 246.7.016.016 | 16 | 16 | 6.5 | 21 | 4 | 1,920 |
| 246.7.016.020 | 16 | 20 | 6.5 | 21 | 5 | 1,900 |
| 246.7.016.025 | 16 | 25 | 6.5 | 21 | 6.2 | 1,870 |
| 246.7.020.016 | 20 | 16 | 8.5 | 26 | 4 | 3,050 |
| 246.7.020.020 | 20 | 20 | 8.5 | 26 | 5 | 3,000 |
| 246.7.020.025 | 20 | 25 | 8.5 | 26 | 6.2 | 2,980 |
| 246.7.020.032 | 20 | 32 | 8.5 | 26 | 8 | 2,950 |
| 246.7.025.020 | 25 | 20 | 10.5 | 32 | 5 | 5,100 |
| 246.7.025.025 | 25 | 25 | 10.5 | 32 | 6.2 | 5,080 |
| 246.7.025.032 | 25 | 32 | 10.5 | 32 | 8 | 5,020 |
| 246.7.025.040 | 25 | 40 | 10.5 | 32 | 10 | 5,000 |
| 246.7.032.032 | 32 | 32 | 13.5 | 42 | 8 | 7,600 |
| 246.7.032.040 | 32 | 40 | 13.5 | 42 | 10 | 7,500 |
| 246.7.032.050 | 32 | 50 | 13.5 | 42 | 12 | 7,480 |
| 246.7.032.063 | 32 | 63 | 13.5 | 42 | 15.7 | 7,450 |
| 246.7.040.032 | 40 | 32 | 13.5 | 52 | 8 | 13,000 |
| 246.7.040.040 | 40 | 40 | 13.5 | 52 | 10 | 12,700 |
| 246.7.040.050 | 40 | 50 | 13.5 | 52 | 12.5 | 12,500 |
| 246.7.040.063 | 40 | 63 | 13.5 | 52 | 15.7 | 12,450 |
| 246.7.040.080 | 40 | 80 | 13.5 | 52 | 20 | 12,430 |
| 246.7.050.032 | 50 | 32 | 17 | 65 | 8 | 21,000 |
| 246.7.050.040 | 50 | 40 | 17 | 65 | 10 | 20,100 |
| 246.7.050.050 | 50 | 50 | 17 | 65 | 12.5 | 19,600 |
| 246.7.050.063 | 50 | 63 | 17 | 65 | 15.7 | 19,200 |
| 246.7.050.080 | 50 | 80 | 17 | 65 | 20 | 19,100 |
| 246.7.050.100 | 50 | 100 | 17 | 65 | 25 | 19,050 |
| 246.7.063.032 | 63 | 32 | 17 | 81 | 8 | 37,000 |
| 246.7.063.040 | 63 | 40 | 17 | 81 | 10 | 35,900 |
| 246.7.063.050 | 63 | 50 | 17 | 81 | 12.5 | 34,000 |
| 246.7.063.063 | 63 | 63 | 17 | 81 | 15.7 | 33,000 |
| 246.7.063.080 | 63 | 80 | 17 | 81 | 20 | 32,000 |

| Order No | $d_1$ | $L_0$ | $d_2$ | $d_3$ | f max. | F max. [N] |
|---|---|---|---|---|---|---|
| 246.7.063.100 | 63 | 100 | 17 | 81 | 25 | 31,800 |
| 246.7.063.125 | 63 | 125 | 17 | 81 | 31.2 | 31,600 |
| 246.7.080.032 | 80 | 32 | 21 | 104 | 8 | 62,500 |
| 246.7.080.040 | 80 | 40 | 21 | 104 | 10 | 59,000 |
| 246.7.080.050 | 80 | 50 | 21 | 104 | 12.5 | 58,000 |
| 246.7.080.063 | 80 | 63 | 21 | 104 | 15.7 | 55,000 |
| 246.7.080.080 | 80 | 80 | 21 | 104 | 20 | 54,000 |
| 246.7.080.100 | 80 | 100 | 21 | 104 | 25 | 53,000 |
| 246.7.080.125 | 80 | 125 | 21 | 104 | 31.2 | 52,000 |
| 246.7.100.032 | 100 | 32 | 21 | 130 | 8 | 110,000 |
| 246.7.100.040 | 100 | 40 | 21 | 130 | 10 | 102,500 |
| 246.7.100.050 | 100 | 50 | 21 | 130 | 12.5 | 95,000 |
| 246.7.100.063 | 100 | 63 | 21 | 130 | 15.7 | 92,000 |
| 246.7.100.080 | 100 | 80 | 21 | 130 | 20 | 89,000 |
| 246.7.100.100 | 100 | 100 | 21 | 130 | 25 | 87,000 |
| 246.7.100.125 | 100 | 125 | 21 | 130 | 31.2 | 86,000 |
| 246.7.125.032 | 125 | 32 | 27 | 160 | 8 | 178,000 |
| 246.7.125.040 | 125 | 40 | 27 | 160 | 10 | 168,000 |
| 246.7.125.050 | 125 | 50 | 27 | 160 | 12.5 | 157,000 |
| 246.7.125.063 | 125 | 63 | 27 | 160 | 15.7 | 150,000 |
| 246.7.125.080 | 125 | 80 | 27 | 160 | 20 | 142,000 |
| 246.7.125.100 | 125 | 100 | 27 | 160 | 25 | 135,000 |
| 246.7.125.125 | 125 | 125 | 27 | 160 | 31.2 | 133,000 |
| 246.7.125.160 | 125 | 160 | 27 | 160 | 40 | 130,000 |

246.7.016.
Ø 16/95 Shore A

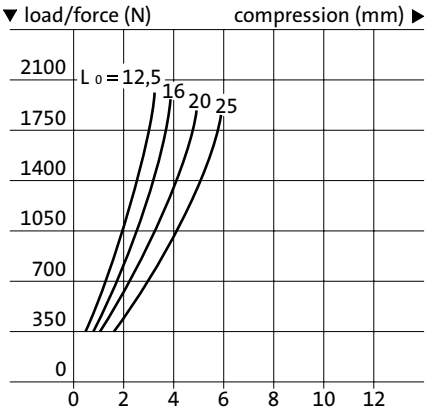

# FIBROFLEX®-TUBULAR SPRING ELEMENT 95 SHORE A, TO DIN ISO 10069-1

## 246.7.020.
## Ø 20/95 Shore A

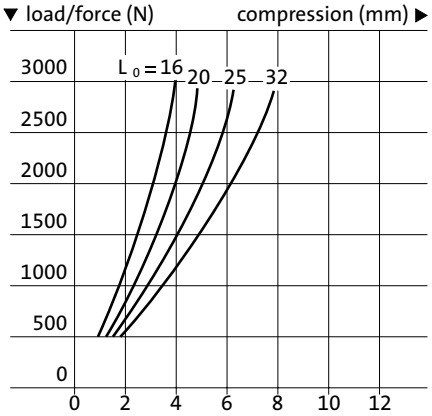


## 246.7.025.
## Ø 25/95 Shore A

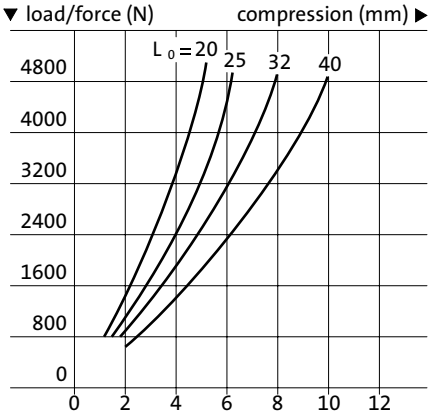


## 246.7.032.
## Ø 32/95 Shore A

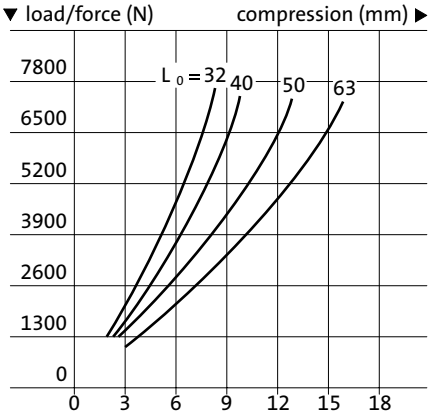


## 246.7.040.
## Ø 40/95 Shore A

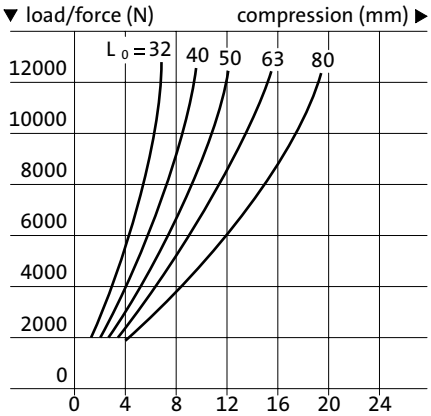


## 246.7.050.
## Ø 50/95 Shore A

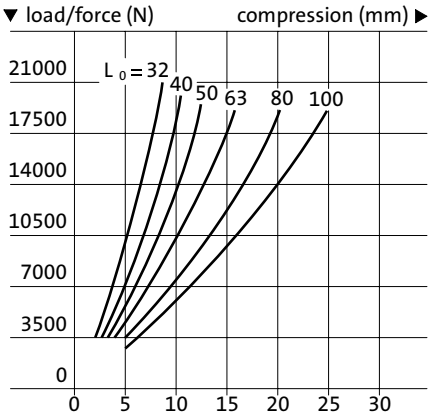


## 246.7.063.
## Ø 63/95 Shore A

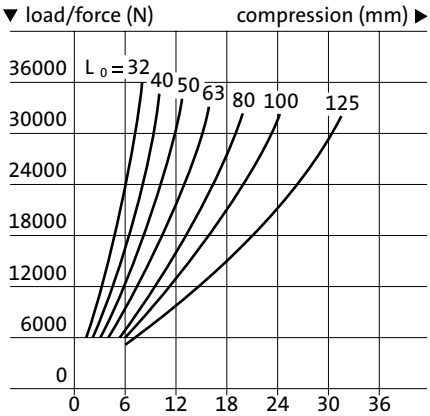


## 246.7.080.
## Ø 80/95 Shore A

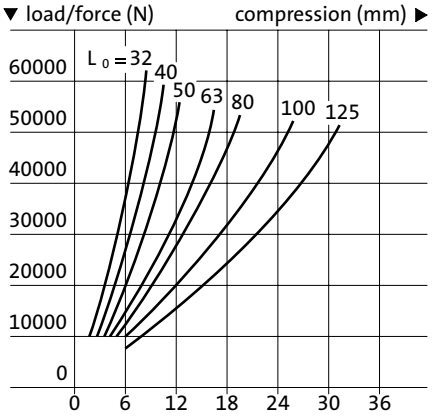


## 246.7.100.
## Ø 100/95 Shore A

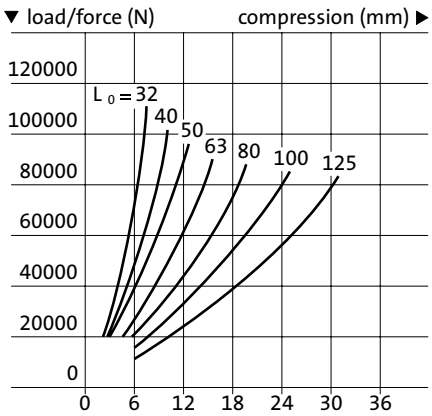


## 246.7.125.
## Ø 125/95 Shore A

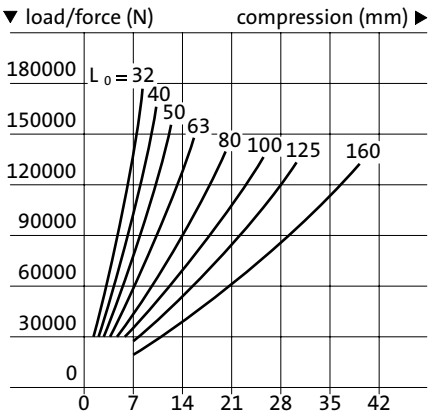

# FIBROELAST® TUBULAR SPRING ELEMENT 70 SHORE A

2461.4.

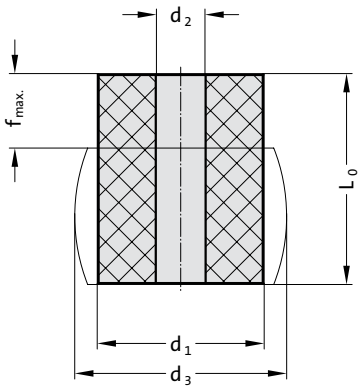


**Material:**
Polyester-based polyurethane 70 Shore A
Colour: white

**Note:**
The physical properties of polyurethane elastomers means that they have a tendency to settle. The extent of such settlement is dependent on the internal heat of friction, speed and number of load changes, the spring travel and the Shore hardness.
Settlement may be as much as 4 to 7% of the spring length $L_0$.

### 2461.4. FIBROELAST® Tubular spring element 70 Shore A

| Order No | $d_1$ | $L_0$ | $d_2$ | $d_3$ | f max. |
|---|---|---|---|---|---|
| 2461.4.016.012 | 16 | 12 | 6.5 | 21 | 4.8 |
| 2461.4.016.016 | 16 | 16 | 6.5 | 21 | 6.4 |
| 2461.4.016.020 | 16 | 20 | 6.5 | 21 | 8 |
| 2461.4.016.025 | 16 | 25 | 6.5 | 21 | 10 |
| 2461.4.020.016 | 20 | 16 | 8.5 | 26 | 6.4 |
| 2461.4.020.020 | 20 | 20 | 8.5 | 26 | 8 |
| 2461.4.020.025 | 20 | 25 | 8.5 | 26 | 10 |
| 2461.4.020.032 | 20 | 32 | 8.5 | 26 | 12.8 |
| 2461.4.025.020 | 25 | 20 | 10.5 | 32 | 8 |
| 2461.4.025.025 | 25 | 25 | 10.5 | 32 | 10 |
| 2461.4.025.032 | 25 | 32 | 10.5 | 32 | 12.8 |
| 2461.4.025.040 | 25 | 40 | 10.5 | 32 | 16 |
| 2461.4.032.032 | 32 | 32 | 13.5 | 42 | 12.8 |
| 2461.4.032.040 | 32 | 40 | 13.5 | 42 | 16 |
| 2461.4.032.050 | 32 | 50 | 13.5 | 42 | 20 |
| 2461.4.032.063 | 32 | 63 | 13.5 | 42 | 25.2 |
| 2461.4.040.032 | 40 | 32 | 13.5 | 52 | 12.8 |
| 2461.4.040.040 | 40 | 40 | 13.5 | 52 | 16 |
| 2461.4.040.050 | 40 | 50 | 13.5 | 52 | 20 |
| 2461.4.040.063 | 40 | 63 | 13.5 | 52 | 25.2 |
| 2461.4.040.080 | 40 | 80 | 13.5 | 52 | 32 |
| 2461.4.050.032 | 50 | 32 | 17 | 65 | 12.8 |
| 2461.4.050.040 | 50 | 40 | 17 | 65 | 16 |
| 2461.4.050.050 | 50 | 50 | 17 | 65 | 20 |
| 2461.4.050.063 | 50 | 63 | 17 | 65 | 25.2 |
| 2461.4.050.080 | 50 | 80 | 17 | 65 | 32 |
| 2461.4.050.100 | 50 | 100 | 17 | 65 | 40 |
| 2461.4.063.032 | 63 | 32 | 17 | 81 | 12.8 |
| 2461.4.063.040 | 63 | 40 | 17 | 81 | 16 |
| 2461.4.063.050 | 63 | 50 | 17 | 81 | 20 |
| 2461.4.063.063 | 63 | 63 | 17 | 81 | 25.2 |
| 2461.4.063.080 | 63 | 80 | 17 | 81 | 32 |

| Order No | $d_1$ | $L_0$ | $d_2$ | $d_3$ | f max. |
|---|---|---|---|---|---|
| 2461.4.063.100 | 63 | 100 | 17 | 81 | 40 |
| 2461.4.063.125 | 63 | 125 | 17 | 81 | 50 |
| 2461.4.080.032 | 80 | 32 | 21 | 104 | 12.8 |
| 2461.4.080.040 | 80 | 40 | 21 | 104 | 16 |
| 2461.4.080.050 | 80 | 50 | 21 | 104 | 20 |
| 2461.4.080.063 | 80 | 63 | 21 | 104 | 25.2 |
| 2461.4.080.080 | 80 | 80 | 21 | 104 | 32 |
| 2461.4.080.100 | 80 | 100 | 21 | 104 | 40 |
| 2461.4.080.125 | 80 | 125 | 21 | 104 | 50 |
| 2461.4.100.032 | 100 | 32 | 21 | 130 | 12.8 |
| 2461.4.100.040 | 100 | 40 | 21 | 130 | 16 |
| 2461.4.100.050 | 100 | 50 | 21 | 130 | 20 |
| 2461.4.100.063 | 100 | 63 | 21 | 130 | 25.2 |
| 2461.4.100.080 | 100 | 80 | 21 | 130 | 32 |
| 2461.4.100.100 | 100 | 100 | 21 | 130 | 40 |
| 2461.4.100.125 | 100 | 125 | 21 | 130 | 50 |
| 2461.4.125.032 | 125 | 32 | 27 | 160 | 12.8 |
| 2461.4.125.040 | 125 | 40 | 27 | 160 | 16 |
| 2461.4.125.050 | 125 | 50 | 27 | 160 | 20 |
| 2461.4.125.063 | 125 | 63 | 27 | 160 | 25.2 |
| 2461.4.125.080 | 125 | 80 | 27 | 160 | 32 |
| 2461.4.125.100 | 125 | 100 | 27 | 160 | 40 |
| 2461.4.125.125 | 125 | 125 | 27 | 160 | 50 |
| 2461.4.125.160 | 125 | 160 | 27 | 160 | 64 |

2461.4.016.
Ø 16/70 Shore A

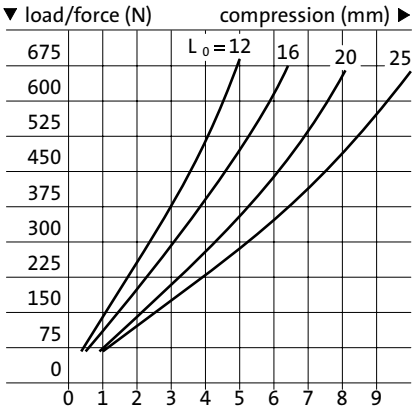

# FIBROELAST® TUBULAR SPRING ELEMENT 70 SHORE A

## 2461.4.020.
## Ø 20/70 Shore A

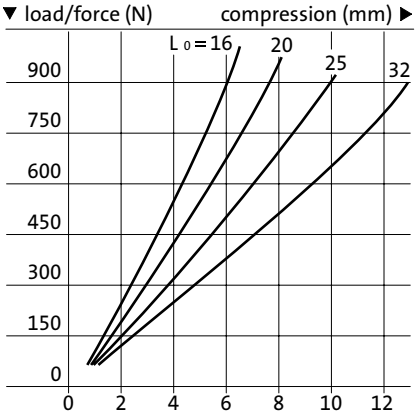


## 2461.4.025.
## Ø 25/70 Shore A

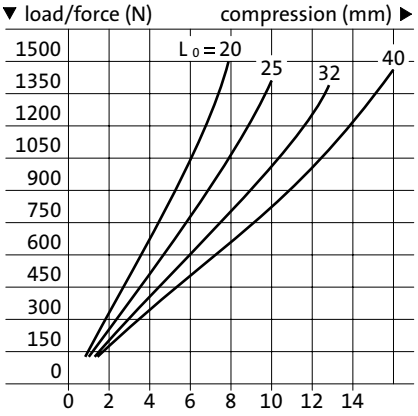


## 2461.4.032.
## Ø 32/70 Shore A

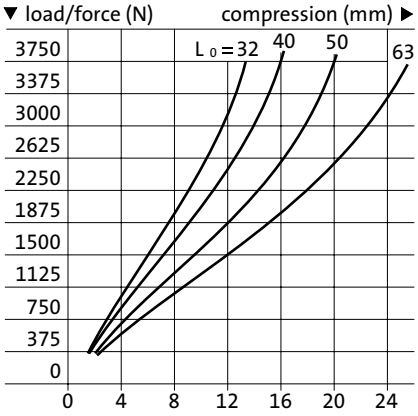


## 2461.4.040.
## Ø 40/70 Shore A

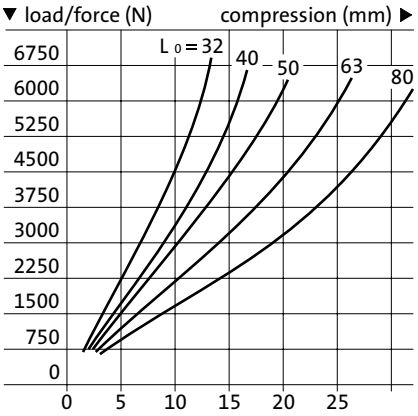


## 2461.4.050.
## Ø 50/70 Shore A

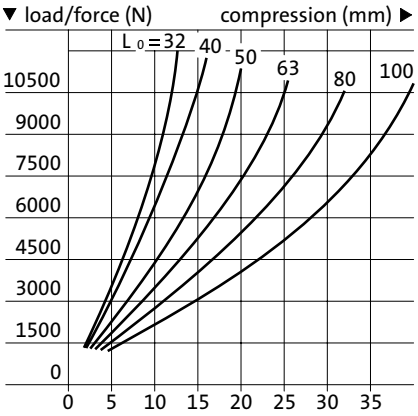


## 2461.4.063.
## Ø 63/70 Shore A

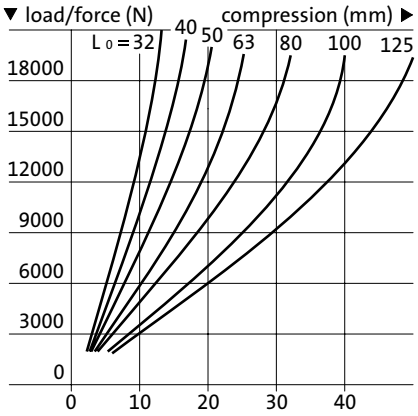


## 2461.4.080.
## Ø 80/70 Shore A

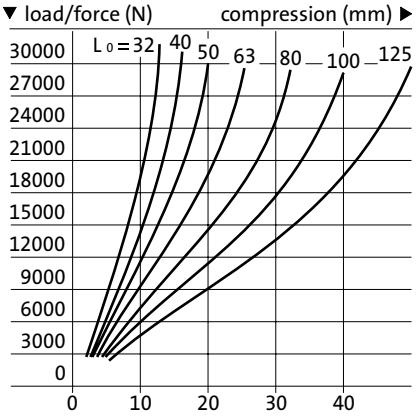


## 2461.4.100.
## Ø 100/70 Shore A

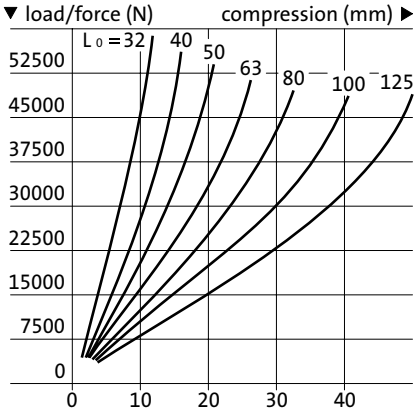


## 2461.4.125.
## Ø 125/70 Shore A

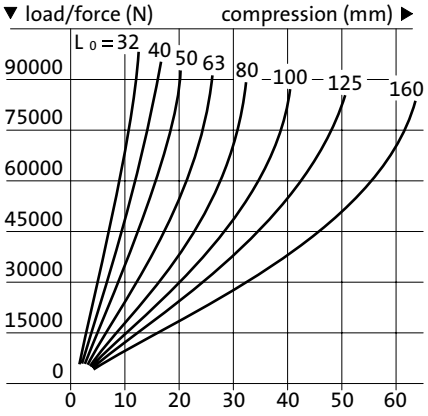

# TUBULAR SPRING ELEMENT, RUBBER 70 SHORE A

2461.2.

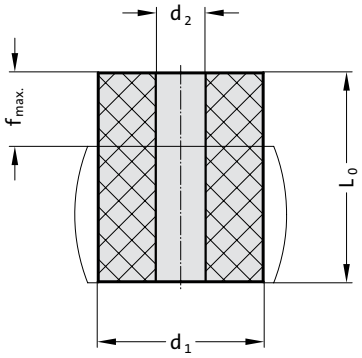


**Material:**
Chloroprene rubber 70 shore A
Colour: black

**Note:**
The physical properties of elastomere springs means that they have a tendency to settle. The extent of such settlement is dependent on the internal heat of friction, speed and number of load changes, the spring travel and the Shore hardness.
Settlement may be as much as 3 to 5% of the spring length $L_0$.

**Physical characteristics:**
Tensile strength acc. to DIN 53504: ≥ 12 N/mm²
Elongation at break acc. to DIN 53504: ≥ 250 %
Bulk density acc. to DIN 53479: 1.37 g/cm³
Compression set acc. to DIN 53517: ≤ 20 % (24 h/70 °C)
Temperature scope: -20 °C to 80 °C short-term to max. 120 °C

### 2461.2. Tubular Spring Element, Rubber 70 Shore A

| Order No | $d_1$ | $L_0$ | $d_2$ | f max. |
|---|---|---|---|---|
| 2461.2.016.012 | 16 | 12 | 6.5 | 4.8 |
| 2461.2.016.016 | 16 | 16 | 6.5 | 6.4 |
| 2461.2.016.020 | 16 | 20 | 6.5 | 8 |
| 2461.2.016.025 | 16 | 25 | 6.5 | 10 |
| 2461.2.020.016 | 20 | 16 | 8.5 | 6.4 |
| 2461.2.020.020 | 20 | 20 | 8.5 | 8 |
| 2461.2.020.025 | 20 | 25 | 8.5 | 10 |
| 2461.2.020.032 | 20 | 32 | 8.5 | 12.8 |
| 2461.2.025.020 | 25 | 20 | 10.5 | 8 |
| 2461.2.025.025 | 25 | 25 | 10.5 | 10 |
| 2461.2.025.032 | 25 | 32 | 10.5 | 12.8 |
| 2461.2.025.040 | 25 | 40 | 10.5 | 16 |
| 2461.2.032.032 | 32 | 32 | 13.5 | 12.8 |
| 2461.2.032.040 | 32 | 40 | 13.5 | 16 |
| 2461.2.032.050 | 32 | 50 | 13.5 | 20 |
| 2461.2.032.063 | 32 | 63 | 13.5 | 25.2 |
| 2461.2.040.032 | 40 | 32 | 13.5 | 12.8 |
| 2461.2.040.040 | 40 | 40 | 13.5 | 16 |
| 2461.2.040.050 | 40 | 50 | 13.5 | 20 |
| 2461.2.040.063 | 40 | 63 | 13.5 | 25.2 |
| 2461.2.040.080 | 40 | 80 | 13.5 | 32 |
| 2461.2.050.032 | 50 | 32 | 17 | 12.8 |
| 2461.2.050.040 | 50 | 40 | 17 | 16 |
| 2461.2.050.050 | 50 | 50 | 17 | 20 |
| 2461.2.050.063 | 50 | 63 | 17 | 25.2 |
| 2461.2.050.080 | 50 | 80 | 17 | 32 |
| 2461.2.050.100 | 50 | 100 | 17 | 40 |
| 2461.2.063.032 | 63 | 32 | 17 | 12.8 |
| 2461.2.063.040 | 63 | 40 | 17 | 16 |
| 2461.2.063.050 | 63 | 50 | 17 | 20 |
| 2461.2.063.063 | 63 | 63 | 17 | 25.2 |
| 2461.2.063.080 | 63 | 80 | 17 | 32 |

| Order No | $d_1$ | $L_0$ | $d_2$ | f max. |
|---|---|---|---|---|
| 2461.2.063.100 | 63 | 100 | 17 | 40 |
| 2461.2.063.125 | 63 | 125 | 17 | 50 |
| 2461.2.080.032 | 80 | 32 | 21 | 12.8 |
| 2461.2.080.040 | 80 | 40 | 21 | 16 |
| 2461.2.080.050 | 80 | 50 | 21 | 20 |
| 2461.2.080.063 | 80 | 63 | 21 | 25.2 |
| 2461.2.080.080 | 80 | 80 | 21 | 32 |
| 2461.2.080.100 | 80 | 100 | 21 | 40 |
| 2461.2.080.125 | 80 | 125 | 21 | 50 |
| 2461.2.100.032 | 100 | 32 | 21 | 12.8 |
| 2461.2.100.040 | 100 | 40 | 21 | 16 |
| 2461.2.100.050 | 100 | 50 | 21 | 20 |
| 2461.2.100.063 | 100 | 63 | 21 | 25.2 |
| 2461.2.100.080 | 100 | 80 | 21 | 32 |
| 2461.2.100.100 | 100 | 100 | 21 | 40 |
| 2461.2.100.125 | 100 | 125 | 21 | 50 |
| 2461.2.125.032 | 125 | 32 | 27 | 12.8 |
| 2461.2.125.040 | 125 | 40 | 27 | 16 |
| 2461.2.125.050 | 125 | 50 | 27 | 20 |
| 2461.2.125.063 | 125 | 63 | 27 | 25.2 |
| 2461.2.125.080 | 125 | 80 | 27 | 32 |
| 2461.2.125.100 | 125 | 100 | 27 | 40 |
| 2461.2.125.125 | 125 | 125 | 27 | 50 |
| 2461.2.125.160 | 125 | 160 | 27 | 64 |

2461.2.016.
Ø 16/70 Shore A

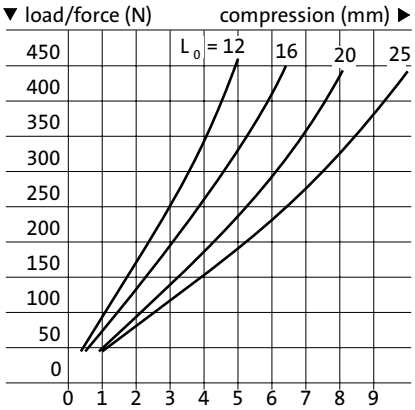

# TUBULAR SPRING ELEMENT, RUBBER 70 SHORE A

## 2461.2.020.
## Ø 20/70 Shore A

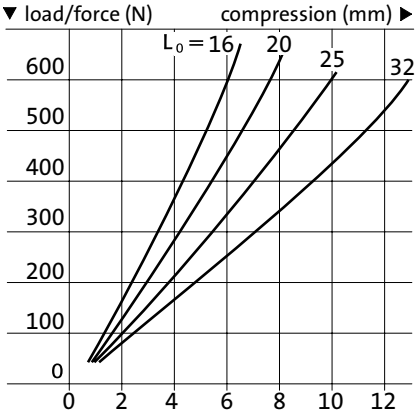


## 2461.2.025.
## Ø 25/70 Shore A

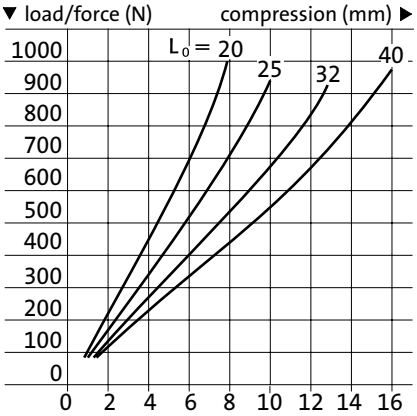


## 2461.2.032.
## Ø 32/70 Shore A

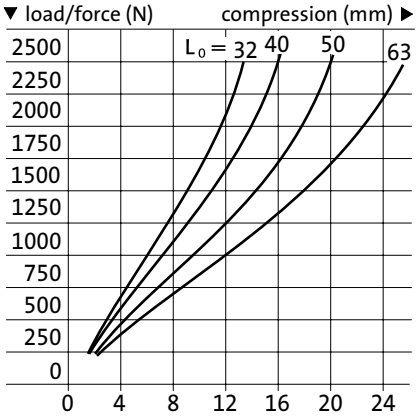


## 2461.2.040.
## Ø 40/70 Shore A

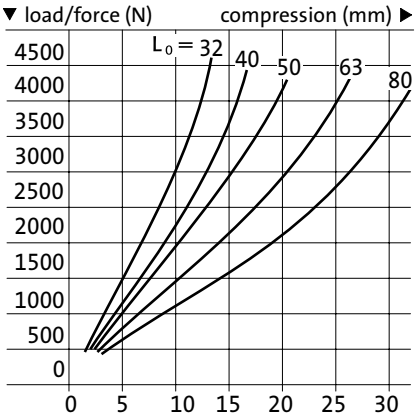


## 2461.2.050.
## Ø 50/70 Shore A

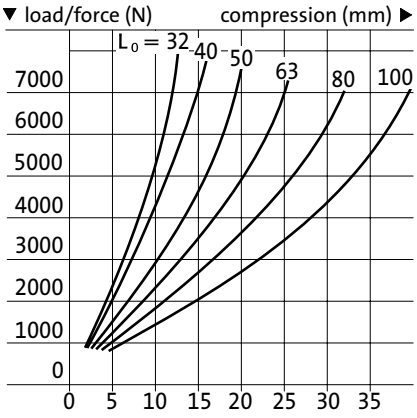


## 2461.2.063.
## Ø 63/70 Shore A

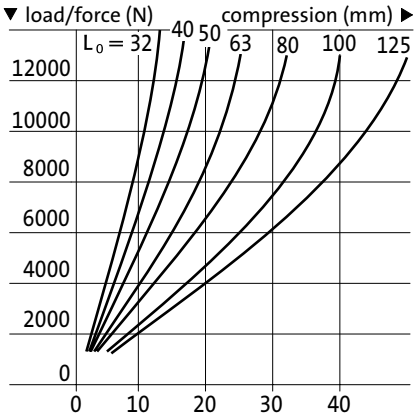


## 2461.2.080.
## Ø 80/70 Shore A

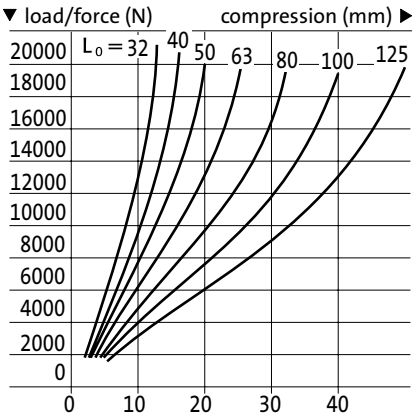


## 2461.2.100.
## Ø 100/70 Shore A

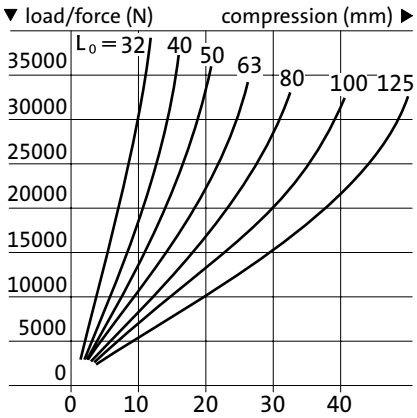


## 2461.2.125.
## Ø 125/70 Shore A

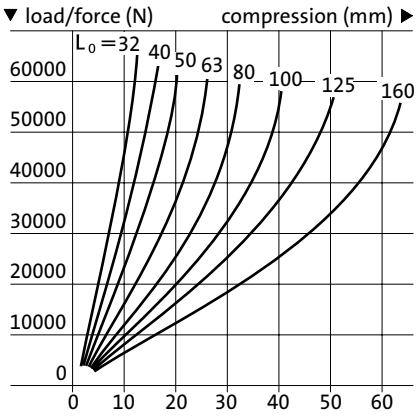

# LOCATING BOLT
# LOCATING BOLT, THREADED

2441.5.

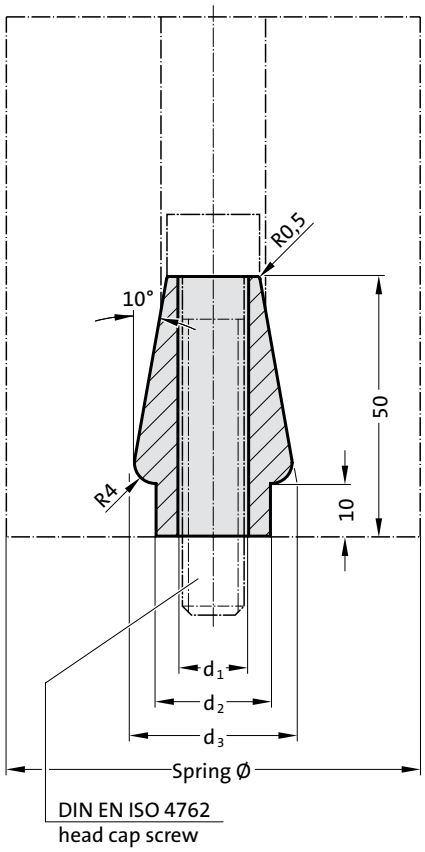


**2441.5.**

**Locating bolt**

| Order No | Spring ø | $d_1$ | $d_2$ | $d_3$ | Socket cap screw DIN EN ISO 4762 |
|---|---|---|---|---|---|
| 2441.5.10 | 63 | 11 | 18 | 28 | M10x65 |
| 2441.5.12 | 80 100 | 13.5 | 22 | 32 | M12x70 |
| 2441.5.16 | 125 | 17.5 | 28 | 38 | M16x70 |

**Note:**
Elastomeric round springs are positioned and secured in place by the locating bolts.
Screws are not included.

2441.6.

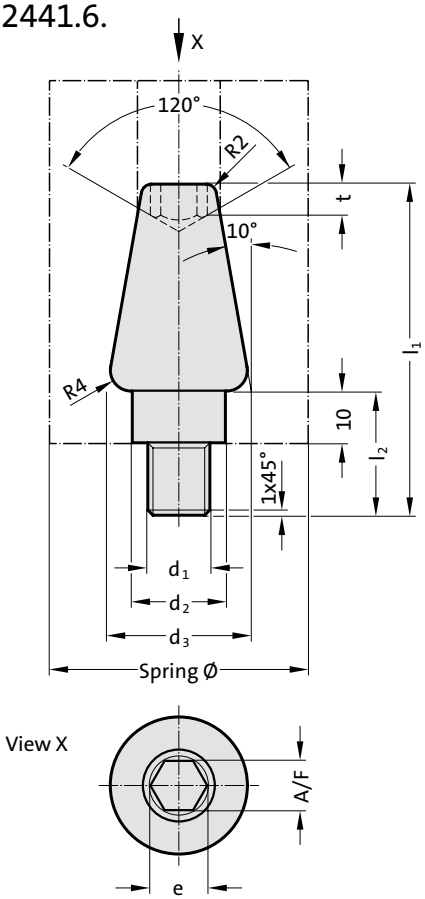


**2441.6.**

**Locating bolt, threaded**

| Order No | Spring ø | $d_1$ | $d_2$ | $d_3$ | $l_1$ | $l_2$ | SW | e | t |
|---|---|---|---|---|---|---|---|---|---|
| 2441.6.12 | 63 | M12 | 18 | 28 | 64 | 24 | 10 | 11.4 | 6 |
| 2441.6.16 | 80 100 | M16 | 22 | 32 | 68 | 28 | 10 | 11.4 | 6 |
| 2441.6.20 | 125 | M20 | 28 | 38 | 72 | 32 | 14 | 16 | 8 |

**Note:**
Elastomeric round springs are positioned and secured in place by the locating bolts.

# STACKING WASHER DIN ISO 10069-2
# THRUST WASHER

## 2441.3.

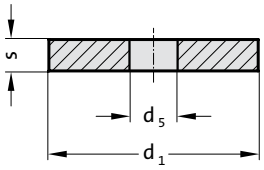


**Mounting example**

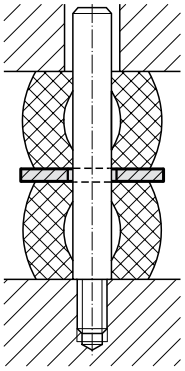

**2441.3. Stacking washer DIN ISO 10069-2**

| Spring-ø | 16 | 20 | 25 | 32 | 40 | 50 | 63 | 80 | 100 | 125 |
|---|---|---|---|---|---|---|---|---|---|---|
| $d_1$ | 20 | 25 | 30 | 40 | 50 | 60 | 80 | 100 | 120 | 150 |
| $d_5$ | 6.5 | 8.5 | 10.5 | 13.5 | 13.5 | 16.5 | 16.5 | 20.5 | 20.5 | 26 |
| s | 4 | 4 | 5 | 5 | 5 | 6 | 6 | 8 | 8 | 8 |

**Material:**
Brass

**Ordering Code (example):**

| | | | |
|---|---|---|---|
| Stacking washer DIN ISO 10069-2 | | =2441.3. | |
| Spring diameter Spring-ø | 50 mm | = | 050 |
| Order No | | =2441.3. | 050 |

## 244.4.

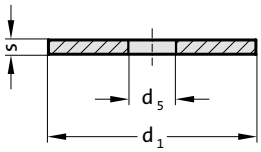


**Mounting example**

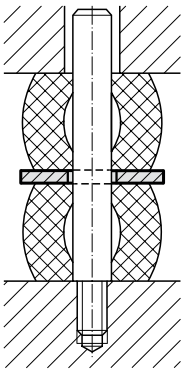

**244.4. Thrust washer**

| Spring-ø | 16 | 20 | 25 | 32 | 40 | 50 | 63 | 80 | 100 | 125 |
|---|---|---|---|---|---|---|---|---|---|---|
| $d_1$ | 20 | 26 | 32 | 40 | 50 | 60 | 80 | 100 | 120 | 150 |
| $d_5$ | 6.5 | 8.5 | 10.5 | 13.5 | 13.5 | 16.5 | 16.5 | 20.5 | 20.5 | 26 |
| s | 1 | 1.5 | 2 | 2.5 | 2.5 | 3 | 3 | 4 | 4 | 5 |

**Material:**
St 37

**Ordering Code (example):**

| | | | |
|---|---|---|---|
| Thrust washer | | = 244.4. | |
| Spring diameter Spring-ø | 50 mm | = | 050 |
| Order No | | = 244.4. | 050 |

# GUIDE PIN
# TRUST WASHER FOR ELASTOMER SPRINGS

**Mounting example**

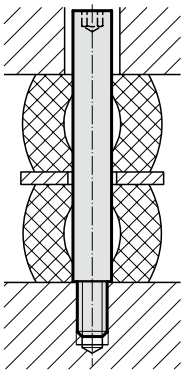

244.5.

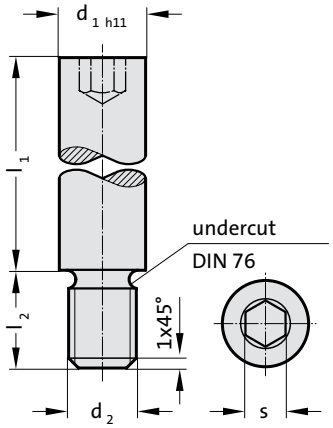


**Material:**
C 15

**244.5. Guide pin**

| $d_1$ | 6 | 8 | 10 | 13 | 16 | 20 | 25 |
|---|---|---|---|---|---|---|---|
| $d_2$ | M4 | M6 | M8 | M10 | M12 | M16 | M20 |
| $l_2$ | 6 | 9 | 15 | 15 | 18 | 25 | 30 |
| s | 3 | 4 | 5 | 6 | 8 | 10 | 14 |
| $l_1$ | | | | | | | |
| 20 | ● | ● | ● | | | | |
| 25 | ● | ● | ● | | | | |
| 32 | ● | ● | ● | ● | ● | | |
| 40 | ● | ● | ● | ● | ● | | |
| 50 | | ● | ● | ● | ● | ● | ● |
| 63 | | | ● | ● | ● | ● | ● |
| 80 | | | | ● | ● | ● | ● |
| 95 | | | | ● | ● | ● | ● |
| 118 | | | | | ● | ● | ● |
| 140 | | | | | ● | ● | ● |
| 180 | | | | | ● | ● | ● |

**Ordering Code (example):**

| | | | |
|---|---|---|---|
| Guide pin | | = 244.5. | |
| Nominal diameter $d_1$ | 16 mm | = | 16. |
| Guide length $l_1$ | 40 mm | = | 040 |
| Order No | | = 244.5. | 16.040 |

**Mounting example**

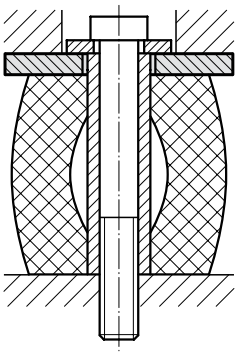

244.6.

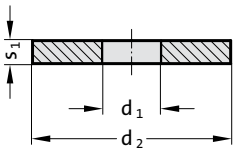


**Material:**
St 37

**244.6. Trust washer for elastomer springs**

| Spring-ø | 25 | 32 | 40 | 50 | 63 | 80 | 100 | 125 |
|---|---|---|---|---|---|---|---|---|
| $d_1$ | 10.5 | 13.5 | 13.5 | 16.5 | 16.5 | 20.5 | 20.5 | 26 |
| $d_2$ | 32 | 40 | 50 | 60 | 80 | 100 | 120 | 150 |
| $s_1$ | 4 | 5 | 5 | 6 | 8 | 10 | 12 | 15 |

**Ordering Code (example):**

| | | | |
|---|---|---|---|
| Trust washer for elastomer springs | | = 244.6. | |
| Spring diameter Spring-ø | 63 mm | = | 063 |
| Order No | | = 244.6. | 063 |

# TRUST WASHER FOR COMPRESSION SPRINGS

## 244.7.

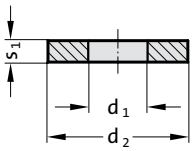


**Mounting example**

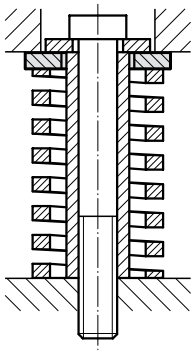

**244.7. Trust washer for compression springs**

| Spring-ø | 20 | 25 | 32 | 40 | 50 | 63 |
|---|---|---|---|---|---|---|
| $d_1$ | 10.5 | 12.5 | 16.5 | 20.5 | 25.5 | 35.5 |
| $d_2$ | 25 | 25 | 38 | 38 | 50 | 65 |
| $s_1$ | 4 | 4 | 5 | 5 | 6 | 8 |

**Material:**

No 1.1191, heat treated

**Ordering Code (example):**

| | | | |
|---|---|---|---|
| Trust washer for compression springs | | = | 244.7. |
| Spring diameter Spring-ø | 40 mm | = | 040 |
| Order No | | = | 244.7. 040 |

# SPACER TUBE

244.9.

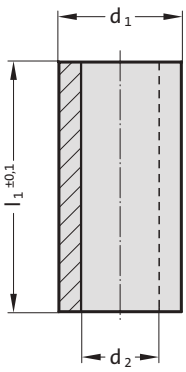


**Mounting example**

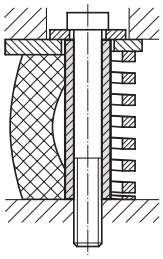

**Material:**
E235 (1.0308), carbonitrided

**Note:**
Other lengths on request!

**244.9. Spacer tube**

| $d_1$ | 10 | 12 | 13 | 16 | 19 | 20 | 25 | 30 | 32 | 35 | 36 | 42 |
|---|---|---|---|---|---|---|---|---|---|---|---|---|
| $d_2$ | 6.4 | 8.4 | 9 | 11 | 13 | 13 | 17 | 22 | 22 | 23 | 26 | 32 |
| $l_1$ | | | | | | | | | | | | |
| 27 | ● | ● | | | | | | | | | | |
| 30 | | | ● | ● | ● | | | | | | | |
| 33 | ● | ● | | ● | | ● | | | | | | |
| 38 | ● | ● | | ● | | ● | | | | | | |
| 40 | | | ● | ● | ● | | | | | | | |
| 44 | ● | ● | | ● | | ● | | | | | | |
| 48 | ● | ● | | ● | | ● | ● | | | | | |
| 50 | | | ● | ● | ● | ● | ● | ● | | | | |
| 61 | ● | ● | | ● | | ● | ● | | | | | |
| 63 | | ● | ● | ● | ● | ● | ● | ● | | | | |
| 70 | | | | | | | ● | ● | | | | |
| 72 | ● | ● | | ● | | ● | ● | ● | | ● | ● | |
| 80 | ● | ● | ● | ● | ● | ● | ● | ● | | ● | ● | |
| 90 | | ● | | ● | | ● | ● | ● | | ● | ● | |
| 95 | | | | | | | ● | | ● | | | |
| 100 | | ● | ● | ● | ● | ● | ● | ● | | ● | ● | |
| 105 | | | | | | | ● | | ● | | | |
| 115 | | | | | | | ● | | | | | |
| 125 | | | | ● | ● | ● | ● | ● | ● | ● | ● | |
| 135 | | | | | | | ● | | | | | |
| 145 | | | | | | | | | ● | | | |
| 150 | | | | ● | | ● | ● | ● | | ● | ● | ● |
| 155 | | | | | | | ● | | | | | |
| 165 | | | | | | | | | ● | | | |
| 175 | | | | | | | ● | ● | | ● | ● | |
| 185 | | | | | | | | | ● | | | |
| 195 | | | | | | | ● | | | | | |
| 200 | | | | ● | | ● | ● | ● | | ● | ● | ● |
| 205 | | | | | | | | | ● | | | |
| 215 | | | | | | | ● | | | | | |
| 225 | | | | | | | ● | ● | ● | ● | ● | |
| 235 | | | | | | | ● | | | | | |
| 245 | | | | | | | | | ● | | | |
| 250 | | | | | | | ● | ● | | ● | ● | |
| 255 | | | | | | | ● | | | | | |

**Ordering Code (example):**

| | | | |
|---|---|---|---|
| Spacer tube | | = | 244.9. |
| Outer diameter $d_1$ | 25 mm | = | 25. |
| Length $l_1$ | 48 mm | = | 048 |
| Order No | | = | 244.9. 25.048 |



subject to alterations

# WASHER

## 244.10.15.

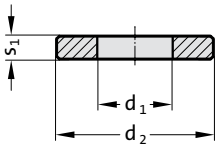


**Mounting example**

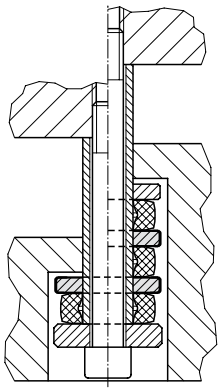

**244.10.15. Washer**

| Order No | $d_1$ | $d_2$ | $s_1$ |
|---|---|---|---|
| 244.10.15.170.30.04 | 17 | 30 | 4 |
| 244.10.15.210.35.06 | 21 | 35 | 6 |
| 244.10.15.260.50.06 | 26 | 50 | 6 |
| 244.10.15.310.65.08 | 31 | 65 | 8 |
| 244.10.15.370.70.08 | 37 | 70 | 8 |
| 244.10.15.430.90.08 | 43 | 90 | 8 |

**Material:**
90MnCrV8, hardened

# WASHER
# SPACER SLEEVE

**Mounting example**

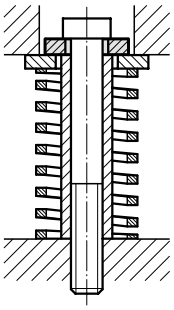

## 244.10.

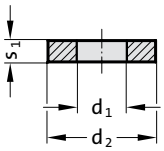


**Material:**
C 45 heat treated

**244.10. Washer**

| $d_1$ | $d_2$ | $s_1$ | $d_1$ | $d_2$ | $s_1$ | $d_1$ | $d_2$ | $s_1$ | $d_1$ | $d_2$ | $s_1$ |
|---|---|---|---|---|---|---|---|---|---|---|---|
| 6.4 | 17 | 3 | 13 | 35 | 5 | 17 | 50 | 10 | 25 | 56 | 10 |
| 8.4 | 17 | 3 | 13 | 30 | 6 | 17 | 58 | 10 | 25 | 70 | 10 |
| 8.4 | 23 | 4 | 13 | 35 | 8 | 20.4 | 30 | 5 | 26 | 58 | 6 |
| 8.5 | 20 | 4 | 13 | 46 | 8 | 21 | 42 | 8 | 26 | 70 | 12 |
| 9 | 26 | 4 | 13.4 | 23 | 4 | 21 | 44 | 8 | 26 | 80 | 12 |
| 10.5 | 25 | 4 | 16.4 | 26 | 4 | 21 | 45 | 8 | 31 | 68 | 8 |
| 10.5 | 25 | 5 | 17 | 35 | 4 | 21 | 45 | 16 | 31 | 68 | 10 |
| 10.5 | 26 | 4 | 17 | 35 | 6 | 21 | 46 | 6 | 32 | 90 | 15 |
| 10.5 | 28 | 4 | 17 | 36 | 4 | 21 | 49 | 6 | 32 | 92 | 15 |
| 10.5 | 30 | 5 | 17 | 36 | 13 | 21 | 65 | 8 | 37 | 80 | 8 |
| 11 | 30 | 6 | 17 | 37 | 6 | 22 | 65 | 12 | 43 | 92 | 8 |
| 11 | 36 | 6 | 17 | 38 | 6 | 22 | 68 | 12 | | | |
| 12.5 | 28 | 4 | 17 | 40 | 6 | 25 | 46 | 10 | | | |
| 13 | 30 | 5 | 17 | 50 | 6 | 25 | 55 | 10 | | | |

**Ordering Code (example):**

| | | | |
|---|---|---|---|
| Washer | | = | 244.10. |
| Inner diameter $d_1$ | 17 mm | = | 170. |
| Outer diameter $d_2$ | 40 mm | = | 40. |
| Thickness $s_1$ | 6 mm | = | 06 |
| Order No | | = | 244.10. 170. 40. 06 |

**Mounting example**

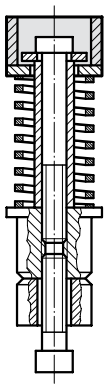

## 244.11.

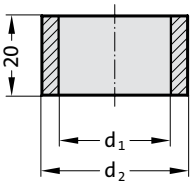


**Material:**
St 35.4 case-hardened

**244.11. Spacer sleeve**

| Spring-ø | 20 25 | 32 40 |
|---|---|---|
| $d_1$ | 20 | 30 |
| $d_2$ | 25 | 38 |
| Order code | 25 | 40 |

**Ordering Code (example):**

| | | | |
|---|---|---|---|
| Spacer sleeve | | = | 244.11. |
| Order code Diameter | 40 mm | = | 40 |
| Order No | | = | 244.11. 40 |

# SPACER PLUG
# ADJUSTING WASHER

## 244.12.

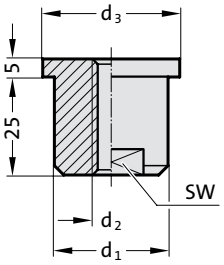


**Mounting example**

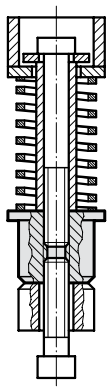

**244.12. Spacer plug**

| Spring-ø | 20 | 25 | 32 | 40 |
|---|---|---|---|---|
| $d_1$ | 20 | 20 | 32 | 32 |
| $d_2$ | M6 | M8 | M10 | M12 |
| $d_3$ | 25.3 | 25.3 | 38 | 38 |
| SW | 15 | 15 | 27 | 27 |

**Material:**
No. 1.7131 case-hardened

**Ordering Code (example):**

| | | | |
|---|---|---|---|
| Spacer plug | | = 244.12. | |
| Spring diameter Spring-ø | 32 mm | = | 32 |
| Order No | | = 244.12. | 32 |

## 244.13.

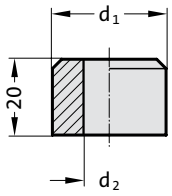


**Mounting example**

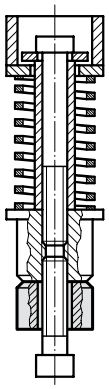

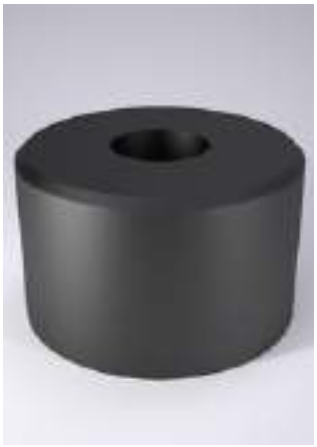

**244.13. Adjusting washer**

| Spring-ø | 20 | 25 | 32 | 40 |
|---|---|---|---|---|
| $d_1$ | 20 | 20 | 32 | 32 |
| $d_2$ | 7 | 9 | 11 | 14 |

**Material:**
No 1.7131

**Ordering Code (example):**

| | | | |
|---|---|---|---|
| Adjusting washer | | = 244.13. | |
| Spring diameter Spring-ø | 32 mm | = | 32 |
| Order No | | = 244.13. | 32 |

# THREADED DISC FOR ELASTOMER SPRINGS
# THREADED DISC FOR COMPRESSION SPRINGS

**Mounting example**

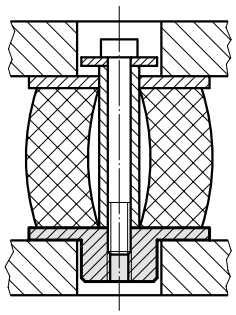

## 2441.14.

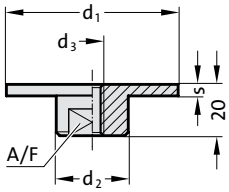


**Material:**
St 60

**2441.14. Threaded disc for elastomer springs**

| Spring-ø | 25 | 32 | 40 | 50 | 63 | 80 | 100 |
|---|---|---|---|---|---|---|---|
| $d_1$ | 32 | 40 | 50 | 60 | 78 | 98 | 120 |
| $d_2$ | 18 | 18 | 18 | 20 | 20 | 26 | 26 |
| $d_3$ | M6 | M8 | M8 | M10 | M10 | M12 | M12 |
| SW | 14 | 14 | 14 | 17 | 17 | 22 | 22 |
| s | 5 | 5 | 5 | 6 | 8 | 10 | 12 |

**Ordering Code (example):**

| | | | |
|---|---|---|---|
| Threaded disc for elastomer springs | | = 2441.14. | |
| Spring diameter Spring-ø | 50 mm | = | 050 |
| Order No | | = 2441.14. | 050 |

**Mounting example**

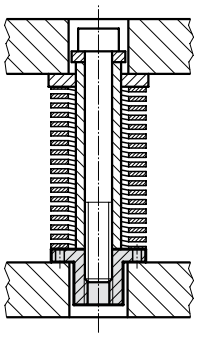

## 2441.15.

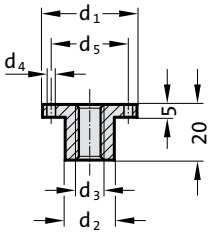


**Material:**
Ck 45 heat treated

**2441.15. Threaded disc for compression springs**

| Spring-ø $d_1$ | $d_2$ | $d_3$ | $d_4$ | $d_5$ |
|---|---|---|---|---|
| 20 | 10 | M6 | 3.2 | 14 |
| 25 | 12.5 | M8 | 4.2 | 20 |
| 32 | 16 | M10 | 4.2 | 25 |
| 40 | 20 | M12 | 4.2 | 30 |
| 50 | 25 | M16 | 4.2 | 40 |

**Ordering Code (example):**

| | | | |
|---|---|---|---|
| Threaded disc for compression springs | | = 2441.15. | |
| Spring diameter Spring-ø $d_1$ | 32 mm | = | 032 |
| Order No | | = 2441.15. | 032 |

# SHOCK ABSORBING WASHER

## 2450.

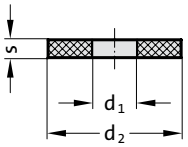


**Mounting example**

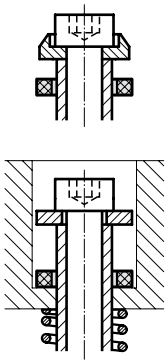

**Material:**
Polyurethan (FIBROFLEX®)

**Execution:**
2450.6. (90 Shore A) available from stock
2450.5. (80 Shore A) and
2450.7. (95 Shore A) available upon request

### 2450. Shock absorbing washer

| $d_1$ | $d_2$ | s | $d_1$ | $d_2$ | s | $d_1$ | $d_2$ | s |
|---|---|---|---|---|---|---|---|---|
| 6.4 | 16 | 3 | 21 | 30 | 5 | 32 | 49 | 8 |
| 11 | 17 | 3 | 13.5 | 32 | 4 | 17 | 50 | 6 |
| 8.5 | 20 | 3 | 25 | 32 | 6 | 26 | 50 | 6 |
| 14 | 23 | 4 | 18 | 32 | 7 | 37 | 53 | 8 |
| 12 | 24 | 5 | 21 | 35 | 7 | 32 | 60 | 10 |
| 10.5 | 15 | 4 | 23.5 | 34 | 4 | 17 | 63 | 6 |
| 10.5 | 25 | 4 | 26 | 35 | 6 | 37 | 65 | 10 |
| 13 | 19 | 4 | 17 | 38 | 5 | 42 | 70 | 10 |
| 13 | 25 | 4 | 21 | 38 | 6 | 21 | 80 | 10 |
| 14 | 26 | 5 | 13.5 | 40 | 5 | 21 | 100 | 10 |
| 15.5 | 23 | 4 | 32 | 40 | 6 | 27 | 125 | 10 |
| 17 | 26 | 4 | 27 | 41 | 7 | | | |
| 18 | 27 | 4 | 31 | 42 | 6 | | | |
| 22 | 28 | 6 | 37 | 46 | 6 | | | |

**Ordering Code (example):**

| | | | |
|---|---|---|---|
| Shock absorbing washer | | = | 2450. |
| Shore-A hardness MAT | 90 Shore A | = | 6. |
| Inner diameter $d_1$ | 23.5 mm | = | 23. |
| Outer diameter $d_2$ | 34 mm | = | 034. |
| Thickness s | 4 mm | = | 04 |
| Order No | | = | 2450. 6. 23. 034. 04 |

# RETAINING BOLT
# THRUST WASHER

## 2441.18.

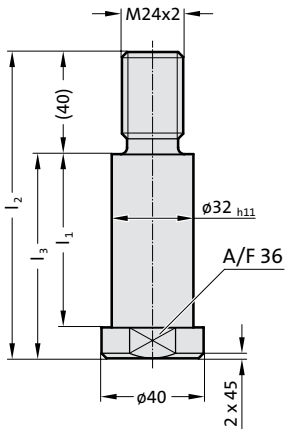


**Material:**
No 1.7225, heat treated

**2441.18. Retaining bolt**

| Order No | $l_1$ | $l_2$ | $l_3$ |
|---|---|---|---|
| 2441.18.032.048 | 48 | 100 | 60 |
| 2441.18.032.068 | 68 | 120 | 80 |
| 2441.18.032.088 | 88 | 140 | 100 |
| 2441.18.032.108 | 108 | 160 | 120 |
| 2441.18.032.128 | 128 | 180 | 140 |
| 2441.18.032.148 | 148 | 200 | 160 |
| 2441.18.032.168 | 168 | 220 | 180 |
| 2441.18.032.188 | 188 | 240 | 200 |
| 2441.18.032.208 | 208 | 260 | 220 |
| 2441.18.032.228 | 228 | 280 | 240 |
| 2441.18.032.248 | 248 | 300 | 260 |
| 2441.18.032.268 | 268 | 320 | 280 |
| 2441.18.032.288 | 288 | 340 | 300 |

## 2441.16.

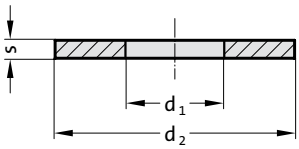


**Material:**
No 1.0570

**2441.16. Thrust washer**

| Order No | $d_1$ | $d_2$ | s |
|---|---|---|---|
| 2441.16.330.080.06 | 33 | 80 | 6 |
| 2441.16.330.100.08 | 33 | 100 | 8 |

# FIBROFLEX®-TUBULAR SPRING ELEMENT

## 246.6.

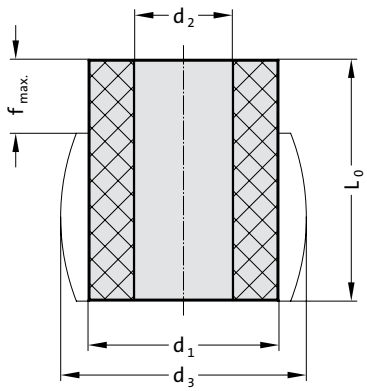

**246.6. .033. FIBROFLEX®-Tubular spring element**

| Order No | $d_1$ | $d_2$ | $d_3$ | f max. |
|---|---|---|---|---|
| 246.6.063.033.080 | 63 | 33 | 82 | 24 |
| 246.6.080.033.080 | 80 | 33 | 106 | 24 |

**Material:**
Polyurethane 90 Shore A Colour: yellow

**Mounting example:**

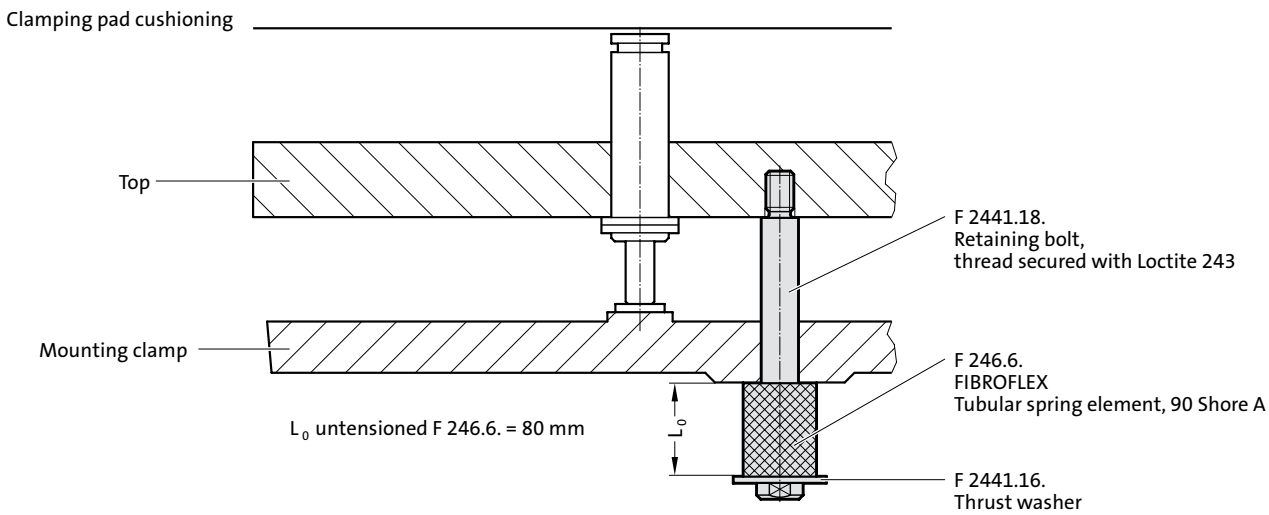

# SLIDE STOP

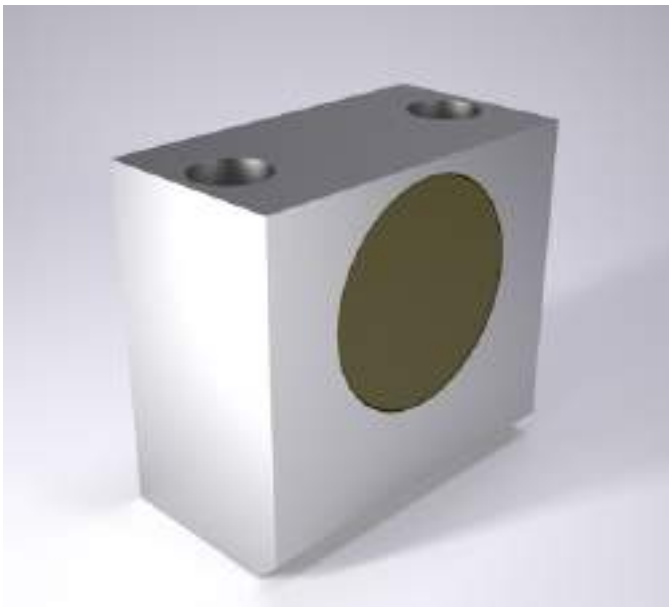

2451.6.

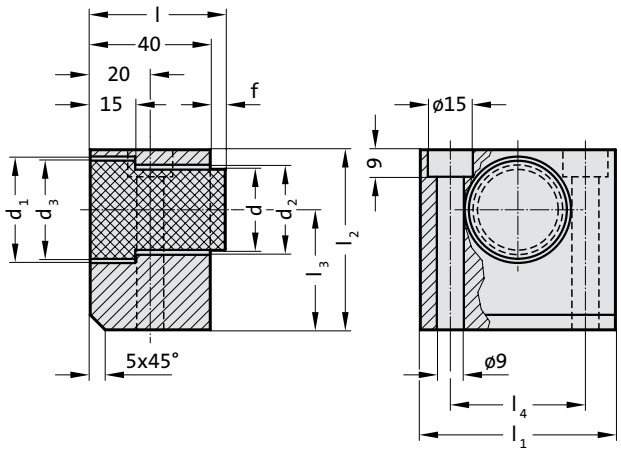


**Mounting example**

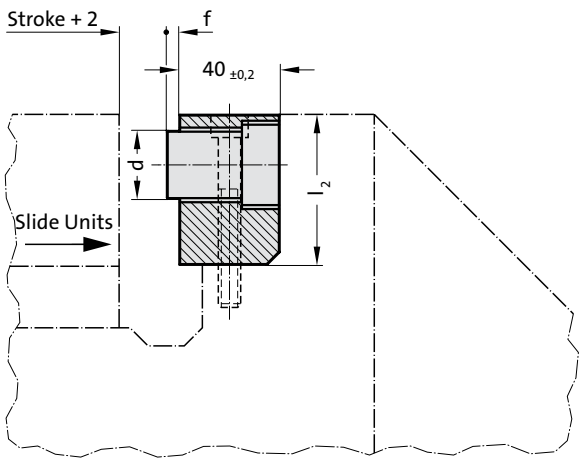


**Material:**
Mounting block: Steel
Stop buffer: FIBROFLEX®, 90 Shore A

**Note:**
Screws are not included.
Order No for spare part: Stop buffer 2451.6.□□□.2

**Fixing:**
Use socket cap screws DIN EN ISO 4762 M8.

**2451.6. Slide stop**

| Order No | d | $d_1$ | $d_2$ | $d_3$ | l | $l_1$ | $l_2$ | $l_3$ | $l_4$ | f | Spring force [N] |
|---|---|---|---|---|---|---|---|---|---|---|---|
| 2451.6.027 | 27 | 35 | 30 | 34 | 45 | 65 | 60 | 40 | 45 | 5 | 5,200 |
| 2451.6.036 | 36 | 45 | 40 | 44 | 45 | 75 | 70 | 45 | 55 | 5 | 9,800 |

# STOP BUFFER

2451.6. .2

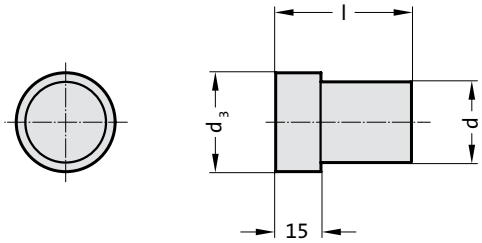

**2451.6. .2 Stop buffer**

| Order No | d | $d_3$ | l |
|---|---|---|---|
| 2451.6.027.2 | 27 | 34 | 45 |
| 2451.6.036.2 | 36 | 44 | 45 |

**Material:**
FIBROFLEX®, 90 Shore A

# SLIDE STOP

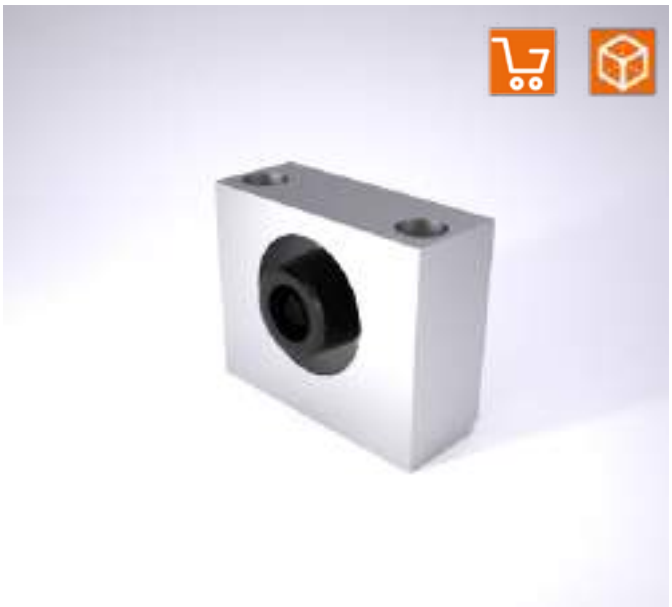

## 2452.10.

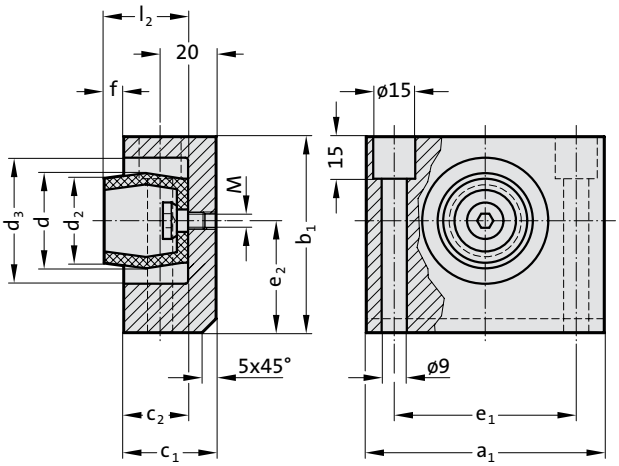


### Mounting example

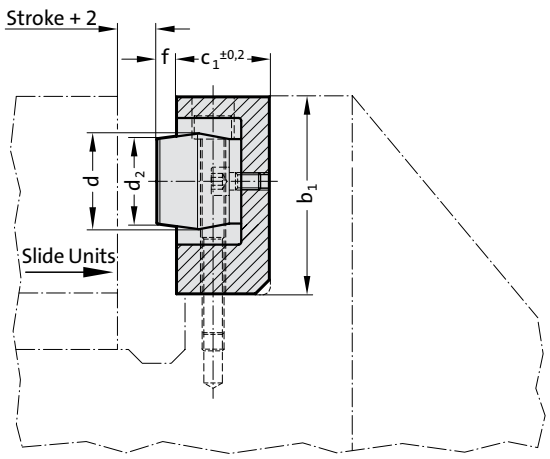


**Material:**
Mounting block: Steel
Damping unit SD: CO polyester elastomer, 55 Shore D

**Note:**
Screws are not included.
Order No for spare part: Damping unit SD, with screw 2452.10.034.030.2
For the exchange of the damping unit, the screw tightening torque for the holding screw is 10 Nm.

**Fixing:**
Use socket cap screws DIN EN ISO 4762 M8.

### 2452.10. Slide stop

| Order No | d* | $d_2$ | $d_3$ | M | $a_1$ | $b_1$ | $c_1$ | $c_2$ | $e_1$ | $e_2$ | $l_2$ | f | Spring force [N] | Energy absorption per stroke under permanent load [Nm] |
|---|---|---|---|---|---|---|---|---|---|---|---|---|---|---|
| 2452.10.034 | 34 | 30 | 45 | M6 | 85 | 70 | 33 | 23 | 65 | 40 | 30 | 7 | 6,000 | 27 |

# DAMPER, LIGHT-DUTY

**Mounting example**

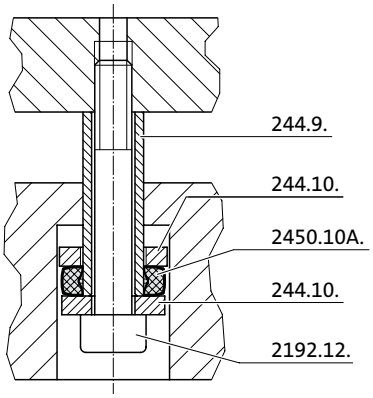


2450.10A.

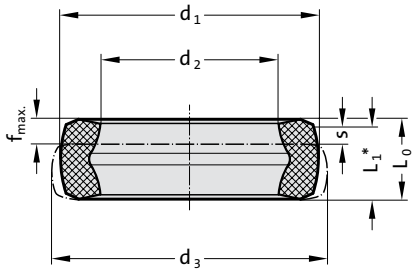


**Description:**
Dampers, light duty , made of co-polyester elastomer are found in the elevating units in progressive dies in the automotive and white goods industry. The increasing stresses on screws and bolts as well as noise emission are reduced by the light duty dampers.

**Benefits:**
- High absorption of force and energy
- Long service life and high level of operating safety
- Noise reduction
- High degree of effectiveness

**Material:**
Co-Polyester-Elastomer

**Technical data:**
Surroundings: Resistant to microbes, seawater, chemicals.
No absorption of water and no swelling.
Grease and oil resistant.
Approved temperature range: -40 °C to +90 °C (-40°F to +194°F)

**Note:**
Socket cap screw 2192.12. see Section C
Spacer tube 244.9. see Section F
Washer 244.10. see Section F

**2450.10A. Damper, light-duty**

| Order No | $d_1$ | $d_2$ | $d_3$ | $L_0$ | $L_1$ | Stroke (s) | $F_{max.}$ [N] | $f_{max.}$ | W [Nm/stroke (s)]** | $W_h$ [Nm/h]*** | Socket cap screw |
|---|---|---|---|---|---|---|---|---|---|---|---|
| 2450.10A.0236.0163.073 | 23.6 | 16.3 | 25.3 | 7.3 | 6.6 | 1.9 | 3,000 | 2 | 3 | 7,500 | M10 |

*Dimension $L_1$ is the slump which must be taken into account for the design.
**W = Total energy per stroke
***$W_h$ = Total energy per hour

# DAMPER, LIGHT-DUTY

## 2450.11B.

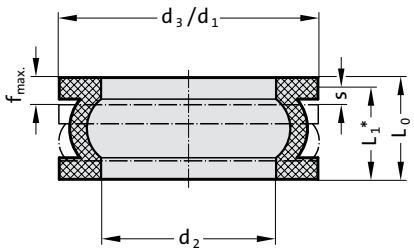


**Mounting example**

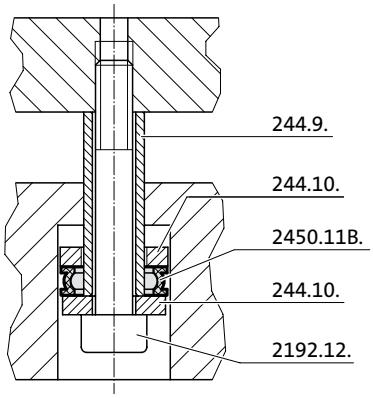

**Description:**
Dampers, light duty , made of co-polyester elastomer are found in the elevating units in progressive dies in the automotive and white goods industry. The increasing stresses on screws and bolts as well as noise emission are reduced by the light duty dampers.
The two-ply version of the flanged damper can also be used depending on the force or stroke without the use of an additional distance washer.

**Benefits:**
- High absorption of force and energy
- Long service life and high level of operating safety
- Noise reduction
- High degree of effectiveness

**Material:**
Co-Polyester-Elastomer

**Technical data:**
Surroundings: Resistant to microbes, seawater, chemicals.
No absorption of water and no swelling.
Grease and oil resistant.
Approved temperature range: -40 °C to +90 °C (-40 °F to +194 °F)

**Note:**
Socket cap screw 2192.12. see Section C
Spacer tube 244.9. see Section F
Washer 244.10. see Section F

### 2450.11B. Damper, light-duty

| Order No | $d_1$ | $d_2$ | $d_3$ | $L_0$ | $L_1$ | Stroke (s) | $F_{max.}$ [N] | $f_{max.}$ | W [Nm/stroke (s)]** | $W_h$ [Nm/h]*** | Socket cap screw |
|---|---|---|---|---|---|---|---|---|---|---|---|
| 2450.11B.0300.0203.118 | 30 | 20.3 | 30.2 | 11.8 | 10.7 | 2.7 | 5,000 | 2.9 | 8.6 | 20,000 | M12 |

*Dimension $L_1$ is the slump which must be taken into account for the design.
**W = Total energy per stroke
***$W_h$ = Total energy per hour

# DAMPER, HEAVY-DUTY

**Mounting example**

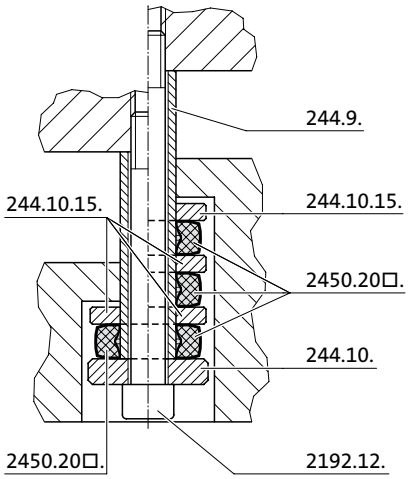


2450.20□.

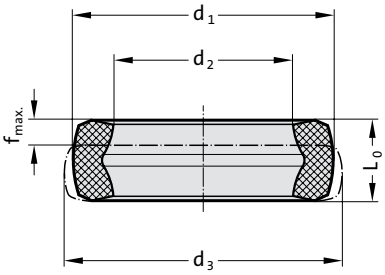


**Description:**
The co-polyester elastomer dampers, heavy-duty, are used as holddown dampers in the automotive and white goods industry. Increasing return stroke speeds and the related stresses on screws and bolts in moveable, suspended tool parts are absorbed by the hold-down dampers. Reduced noise emission is a further additional positive sideeffect.

**Benefits:**
- High absorption of force and energy
- Slight settlement
- Energy absorption between 5 Nm and 269 Nm
- Long service life and high level of operating safety
- Noise reduction
- High degree of effectiveness

**Material:**
Co-Polyester-Elastomer

**Technical data:**
Surroundings: Resistant to microbes, seawater, chemicals.
No absorption of water and no swelling.
Grease and oil resistant.
Approved temperature range: -40°C to +90°C (-40°F to +194°F)

**Note:**
Socket cap screw 2192.12. see Section C
Spacer tube 244.9. see Section F
Washer 244.10. see Section F

**2450.20_. Damper, heavy-duty**

| Order No | $d_1$ | $d_2$ | $d_3$ | $L_0$ | $F_{max.}$ [N] (static | $f_{max.}$ | W [Nm/stroke (s)]* | Socket cap screw |
|---|---|---|---|---|---|---|---|---|
| 2450.20A.0264.0163.078 | 26.4 | 16.3 | 28.4 | 7.8 | 5,500 | 2 | 5 | M10 |
| 2450.20B.0321.0203.108 | 32.1 | 20.3 | 35.1 | 10.8 | 9,000 | 4.4 | 14.2 | M12 |
| 2450.20B.0458.0253.170 | 45.8 | 25.3 | 49.8 | 17 | 20,000 | 4.9 | 44.6 | M16 |
| 2450.20A.0546.0303.213 | 54.6 | 30.3 | 61.8 | 21.3 | 30,000 | 7.6 | 81.9 | M20 |
| 2450.20A.0618.0363.215 | 61.8 | 36.3 | 69.9 | 21.5 | 46,000 | 8.2 | 126.5 | M24 |
| 2450.20A.0785.0423.294 | 78.5 | 42.3 | 89 | 29.4 | 75,000 | 11.4 | 269 | M30 |

*Total energy per stroke

# DAMPER, HEAVY-DUTY
# SELECTION TABLE MULTIPLE LAYERING

## Simple layering

| Order No | $L_1$* | $F_{1\ max}$ [N] (dynamic >0,1) | $W_1$ [Nm/stroke (s)]** | $W_{h1}$ [Nm/h]*** | $H_1$ total height | socket cap screw |
|---|---|---|---|---|---|---|
| 2450.20A.0264.0163.078 | 7,1 | 4100 | 3,5 | 9000 | 17,1 | M10 |
| 2450.20B.0321.0203.108 | 9,8 | 6600 | 12 | 30000 | 23,8 | M12 |
| 2450.20B.0458.0253.170 | 15,3 | 14500 | 19 | 45000 | 31,3 | M16 |
| 2450.20A.0546.0303.213 | 19 | 22500 | 47 | 67000 | 39 | M20 |
| 2450.20A.0618.0363.215 | 19,5 | 37500 | 76 | 114000 | 39,5 | M24 |
| 2450.20A.0785.0423.294 | 27 | 46000 | 143 | 152000 | 50 | M30 |

* Dimension „$L_1$“ is the slump which must be taken into account for the design.

** Total energy per stroke

*** Total energy per hour

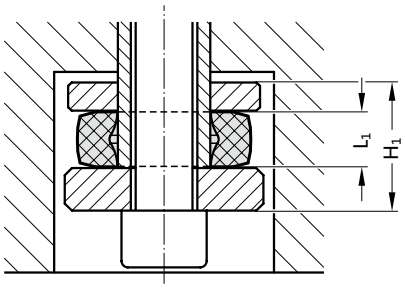


## Double layering

| Order No | $L_1$* | $F_{2\ max}$ [N] (dynamic >0,1) | $W_2$ [Nm/stroke (s)]** | $Wh_2$ [Nm/h]*** | $H_2$ total height | socket cap screw |
|---|---|---|---|---|---|---|
| 2450.20A.0546.0303.213 | 19 | 18000 | 78 | 107000 | 66 | M20 |
| 2450.20A.0618.0363.215 | 19,5 | 35000 | 148 | 174000 | 67 | M24 |
| 2450.20A.0785.0423.294 | 27 | 39000 | 233 | 272000 | 85 | M30 |

* Dimension „$L_1$“ is the slump which must be taken into account for the design.

** Total energy per stroke

*** Total energy per hour

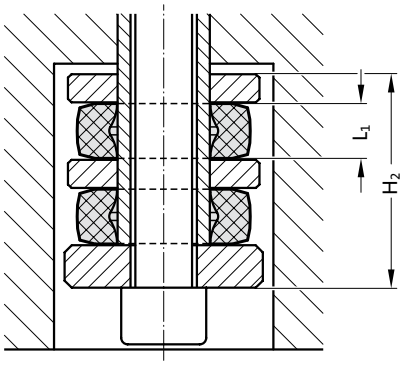


## Threefold layering

| Order No | $L_1$* | $F_{3\ max}$ [N] (dynamic >0,1) | $W_3$ [Nm/stroke (s)]** | $W_{h3}$ [Nm/h]*** | $H_3$ total height | socket cap screw |
|---|---|---|---|---|---|---|
| 2450.20A.0546.0303.213 | 19 | 16000 | 100 | 127000 | 93 | M20 |
| 2450.20A.0618.0363.215 | 19,5 | 28000 | 176 | 194000 | 94,5 | M24 |
| 2450.20A.0785.0423.294 | 27 | 29000 | 255 | 281000 | 120 | M30 |

* Dimension „$L_1$“ is the slump which must be taken into account for the design.

** Total energy per stroke

*** Total energy per hour

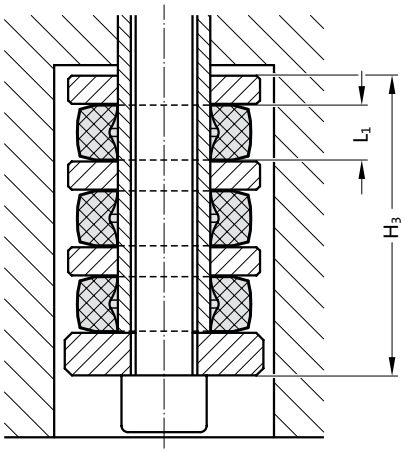

# DAMPER STOPPER

**Mounting example**

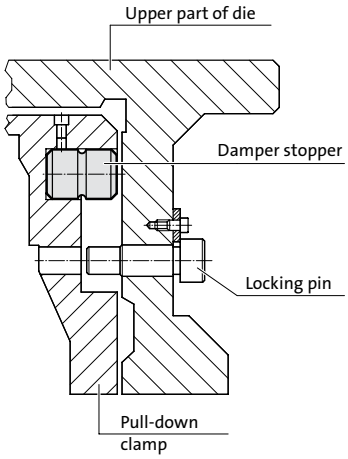


2451.10D.

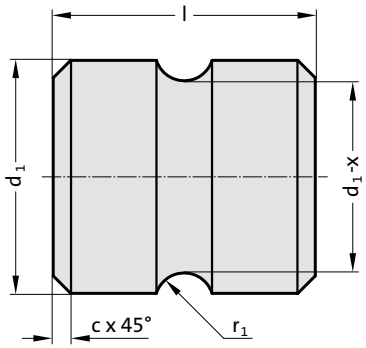


**Description:**
Damper stopper made of co-polyester elastomer dampen the recoil on the locking and unlocking pins in the manufacturing of jigs. Damper stoppers are used in the automotive and white goods industry. Damper stoppers sit inside the pull-down clamps and are radially stressed. The number and size depends on the weight and the velocity of the pull-down clamps.

**Benefits:**
- High absorption of force and energy
- Slight settlement
- UV protection
- Long service life and high level of operating safety
- Noise reduction
- High degree of eff ectiveness

**Material:**
Co-polyester elastomer, black

**Technical data:**
Surroundings: Resistant to microbes, seawater, chemicals.
No absorption of water and no swelling.
Grease and oil resistant.
Approved temperature range: -40 °C to +90 °C (-40 °F to +194 °F)

**2451.10D. Damper stopper**

| Order No | Size | $d_1$ | Cut-in depth $d_1$-x | Cut-in radius $r_1$ | c | l |
|---|---|---|---|---|---|---|
| 2451.10D.040.060 | B | 40 | 8 | 7 | 3 | 60 |
| 2451.10D.050.070 | C | 50 | 10 | 8 | 4 | 70 |
| 2451.10D.063.080 | D | 63 | 12 | 9 | 5 | 80 |
| 2451.10D.080.090 | E | 80 | 14 | 10 | 6 | 90 |

## Number and size (B, C, D, E) of damper stoppers for cushioning

| | Pull-down clamp speed m/s | | | | | | | | | | | | |
|---|---|---|---|---|---|---|---|---|---|---|---|---|---|
| Pull-down clamp weight kg | 0.1 | 0.2 | 0.3 | 0.4 | 0.5 | 0.6 | 0.7 | 0.8 | 0.9 | 1 | 1.1 | 1.2 | 1.3 |
| 100 | 3 x B | 3 x B | 3 x B | 3 x B | 3 x B | 3 x B | 3 x B | 3 x B | 3 x B | 4 x B | 4 x B | 4 x B | 4 x B |
| 250 | 3 x B | 3 x B | 3 x B | 3 x B | 3 x B | 4 x B | 4 x B | 4 x B | 4 x B | 4 x B | 4 x B | 4 x B | 4 x B |
| 500 | 4 x B | 4 x B | 4 x B | 4 x B | 4 x B | 4 x B | 4 x B | 4 x B | 4 x B | 4 x B | 4 x C | 4 x C | 4 x C |
| 750 | 4 x B | 4 x B | 4 x B | 4 x B | 4 x B | 4 x B | 4 x C | 4 x C | 4 x C | 4 x C | 4 x C | 4 x C | 4 x C |
| 1000 | 4 x C | 4 x C | 4 x C | 4 x C | 4 x C | 4 x C | 4 x C | 4 x C | 4 x C | 4 x C | 4 x C | 4 x D | 4 x D |
| 1250 | 4 x C | 4 x C | 4 x C | 4 x C | 4 x C | 4 x C | 4 x C | 4 x C | 4 x D | 4 x D | 4 x D | 4 x D | 4 x D |
| 1500 | 4 x C | 4 x C | 4 x C | 4 x C | 4 x C | 4 x C | 4 x D | 4 x D | 4 x D | 4 x D | 4 x D | 4 x D | 4 x E |
| 1750 | 4 x C | 4 x C | 4 x C | 4 x D | 4 x D | 4 x D | 4 x D | 4 x D | 4 x D | 4 x E | 4 x E | 4 x E | 4 x E |
| 2000 | 4 x D | 4 x D | 4 x D | 4 x D | 4 x D | 4 x D | 4 x D | 4 x D | 4 x D | 4 x E | 4 x E | 4 x E | 4 x E |
| 2500 | 4 x D | 4 x D | 4 x D | 4 x D | 4 x D | 4 x D | 4 x E | 4 x E | 4 x E | 4 x E | 4 x E | 6 x E | 6 x E |
| 3000 | 4 x D | 4 x D | 4 x D | 4 x D | 4 x E | 4 x E | 4 x E | 4 x E | 4 x E | 4 x E | 6 x E | 6 x E | 6 x E |
| 3500 | 4 x D | 4 x E | 4 x E | 4 x E | 4 x E | 4 x E | 4 x E | 4 x E | 6 x E | 6 x E | 8 x E | 8 x E | 10 x E |
| 4000 | 4 x E | 4 x E | 4 x E | 4 x E | 4 x E | 6 x E | 6 x E | 6 x E | 8 x E | 8 x E | 10 x E | 10 x E | 10 x E |
| 4500 | 6 x E | 6 x E | 6 x E | 6 x E | 6 x E | 8 x E | 10 x E | 10 x E | 10 x E | 10 x E | 10 x E | 10 x E | 10 x E |
| 5000 | 6 x E | 6 x E | 8 x E | 8 x E | 8 x E | 10 x E | 10 x E | 10 x E | 10 x E | --- | --- | --- | --- |

# DAMPING UNIT SD

## 2452.10. .2

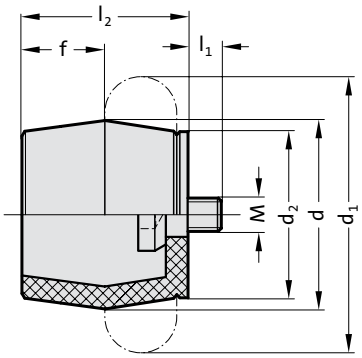

**Material:**
Damping unit SD: CO polyester elastomer, 55 Shore D
Screw: Steel
**Technical data:**
Resistant to microbes, seawater, and chemicals, as well as very good UV and ozone resistance. No water absorption and no bloating.

Starting speed: up to max. 5 m/s
Installation position: any
Dynamic power consumption: 870 N through 90000 N
Permissible temperature range: -40 °C through 90 °C
Dissipation of energy: 40 % through 66 %

**Note:**
We are happy to support you in the calculation and design of a suitable damping unit.

Dynamic (v>0.5 m/s) characteristic curves available for all types upon request.
SD damping units can also be used for emergency stop applications. Further information upon request.

**2452.10. .2 Damping unit SD**

| Order No | d | $l_2$ | $d_1$ | $d_2$ | f | $W_3$ [Nm/stroke]* | M | $l_1$ | Tightening torque [Nm] |
|---|---|---|---|---|---|---|---|---|---|
| 2452.10.012.011.2 | 12 | 11 | 15 | 11 | 4 | 2 | M3 | 3 | 1 |
| 2452.10.017.016.2 | 17 | 16 | 22 | 15 | 6 | 6 | M4 | 4 | 1.7 |
| 2452.10.021.018.2 | 21 | 18 | 26 | 18 | 7 | 10 | M5 | 5 | 2.3 |
| 2452.10.022.019.2 | 22 | 19 | 27 | 19 | 6 | 11.5 | M6 | 6 | 6 |
| 2452.10.028.026.2 | 28 | 26 | 36 | 25 | 9 | 29 | M6 | 6 | 6 |
| 2452.10.034.030.2 | 34 | 30 | 43 | 30 | 10 | 48 | M6 | 6 | 6 |
| 2452.10.037.033.2 | 37 | 33 | 48 | 33 | 12 | 65 | M6 | 6 | 6 |
| 2452.10.040.035.2 | 40 | 35 | 50 | 34 | 14 | 82 | M8 | 8 | 20 |
| 2452.10.043.038.2 | 43 | 38 | 55 | 38 | 14 | 112 | M8 | 8 | 20 |
| 2452.10.047.041.2 | 47 | 41 | 60 | 41 | 17 | 140 | M12 | 12 | 50 |
| 2452.10.050.045.2 | 50 | 45 | 64 | 44 | 19 | 170 | M12 | 12 | 50 |
| 2452.10.054.047.2 | 54 | 47 | 68 | 47 | 17 | 201 | M12 | 12 | 50 |
| 2452.10.057.051.2 | 57 | 51 | 73 | 50 | 21 | 242 | M12 | 12 | 50 |
| 2452.10.062.054.2 | 62 | 54 | 78 | 53 | 21 | 304 | M12 | 12 | 50 |
| 2452.10.065.058.2 | 65 | 58 | 82 | 57 | 22 | 374 | M12 | 12 | 50 |
| 2452.10.070.061.2 | 70 | 61 | 86 | 60 | 24 | 421 | M12 | 12 | 50 |
| 2452.10.072.065.2 | 72 | 65 | 91 | 63 | 26 | 482 | M16 | 16 | 120 |
| 2452.10.080.069.2 | 80 | 69 | 100 | 69 | 23 | 570 | M16 | 16 | 120 |
| 2452.10.082.074.2 | 82 | 74 | 105 | 72 | 28 | 683 | M16 | 16 | 120 |
| 2452.10.085.076.2 | 85 | 76 | 110 | 75 | 27 | 797 | M16 | 16 | 120 |
| 2452.10.090.080.2 | 90 | 80 | 114 | 78 | 30 | 934 | M16 | 16 | 120 |
| 2452.10.098.086.2 | 98 | 86 | 123 | 85 | 31 | 1,147 | M16 | 16 | 120 |
| 2452.10.116.101.2 | 116 | 101 | 146 | 98 | 38 | 2,014 | M16 | 16 | 120 |

*Energy absorption per stroke under permanent load

# SPRING UNIT FOR ELASTOMER SPRING

## 244.14.0.

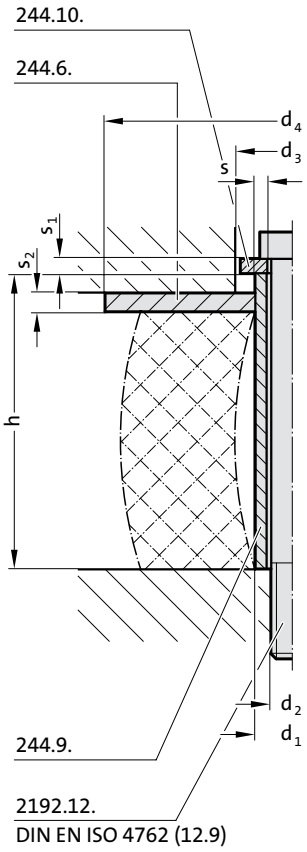


### 244.14.0. Spring unit for elastomer spring

Spring unit consists of:

Allen screw DIN EN ISO 4762 (12.9) 2192.12.

Washer 244.6.

Spacer tube 244.9.

Sheave 244.10.

Elastomer spring ordered separately: 246.5., 246.6., 246.7., 2461.2., 2461.4.

| Spring ø | $d_1 \times s$ | h* | $d_2$ | $d_3$ | $d_4$ | $s_1$ | $s_2$ |
|---|---|---|---|---|---|---|---|
| 25 | 10 × 1,8 | | M 6 | 18 | 32 | 3 | 4 |
| 32 | 12 × 1,8 | | M 8 | 18 | 40 | 3 | 5 |
| 40 | 12 × 1,8 | | M 8 | 30 | 50 | 4 | 5 |
| 50 | 16 × 2,5 | | M 10 | 30 | 60 | 4 | 6 |
| 63 | 16 × 2,5 | | M 10 | 30 | 80 | 4 | 8 |
| 80 | 20 × 3,5 | | M 12 | 30 | 100 | 4 | 10 |
| 100 | 20 × 3,5 | | M 12 | 30 | 120 | 4 | 12 |
| 125 | 25 × 4,5 | | M 16 | 39 | 150 | 6 | 15 |

*h see selection chart spacer tube 244.9. and spring Data

**Ordering Code (example):**

| | | |
|---|---|---|
| Spring unit for elastomer spring | = | 244.14. |
| not loaded | = | 0. |
| for springs ø = 40 mm | = | 040. |
| Spacer tube length h = 48 mm | = | 048 |
| Order No | = | 244.14.0.040.048 |

## 2441.14.1.

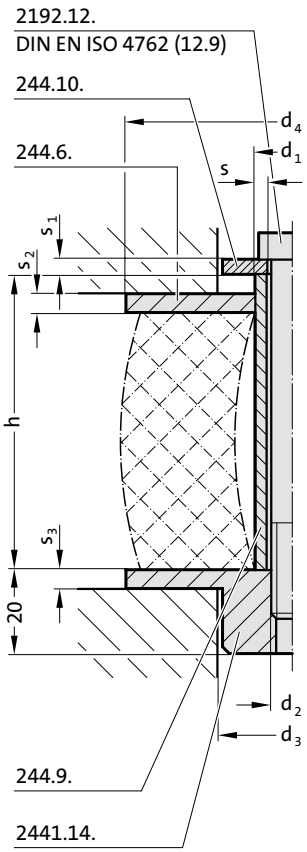


### 2441.14.1. Spring unit for elastomer spring

Spring unit consists of:

Allen screw DIN EN ISO 4762 (12.9) 2192.12.

Washer 244.6.

Spacer tube 244.9.

Sheave 244.10.

Threaded disc 2441.14.

Elastomer spring ordered separately: 246.5., 246.6., 246.7., 2461.2., 2461.4.

| Spring ø | $d_1 \times s$ | h* | $d_2$ | $d_3$ | $d_4$ | $s_1$ | $s_2$ | $s_3$ |
|---|---|---|---|---|---|---|---|---|
| 25 | 10 × 1,8 | | M 6 | 20 | 32 | 3 | 4 | 5 |
| 32 | 12 × 1,8 | | M 8 | 20 | 40 | 3 | 5 | 5 |
| 40 | 12 × 1,8 | | M 8 | 20 | 50 | 4 | 5 | 5 |
| 50 | 16 × 2,5 | | M 10 | 22 | 60 | 4 | 6 | 6 |
| 63 | 16 × 2,5 | | M 10 | 22 | 80 | 4 | 8 | 8 |
| 80 | 20 × 3,5 | | M 12 | 28 | 100 | 4 | 10 | 10 |
| 100 | 20 × 3,5 | | M 12 | 28 | 120 | 4 | 12 | 12 |

*h see selection chart spacer tube 244.9. and spring Data

**Ordering Code (example):**

| | | |
|---|---|---|
| Spring unit for elastomer spring | = | 2441.14. |
| preloaded | = | 1. |
| for springs ø = 40 mm | = | 040. |
| Spacer tube length h = 48 mm | = | 048 |
| Order No | = | 2441.14.1.040.048 |

# SPRING UNIT FOR HELICAL SPRING

## 244.15.0. Spring unit for helical spring

Spring unit consists of:

Allen screw DIN EN ISO 4762 (12.9) 2192.12.

Washer 244.7.

Spacer tube 244.9.

Sheave 244.10.

Compression springs ordered separately: 241.14., 241.15., 241.16., 241.17.

| Spring ø | $d_1 \times s$ | h* | $d_2$ | $d_3$ | $d_4$ | $s_1$ | $s_2$ |
|---|---|---|---|---|---|---|---|
| 20 | 10 × 1,8 | | M 6 | 18 | 25 | 3 | 4 |
| 25 | 12 × 1,8 | | M 8 | 18 | 25 | 3 | 4 |
| 32 | 16 × 2,5 | | M 10 | 30 | 38 | 4 | 5 |
| 40 | 20 × 3,5 | | M 12 | 30 | 38 | 4 | 5 |
| 50 | 25 × 4,0 | | M 16 | 39 | 50 | 6 | 6 |
| 63 | 35 × 6,0 | | M 20 | 52 | 65 | 6 | 8 |

*h see selection chart spacer tube 244.9. and spring Data

244.15.0.

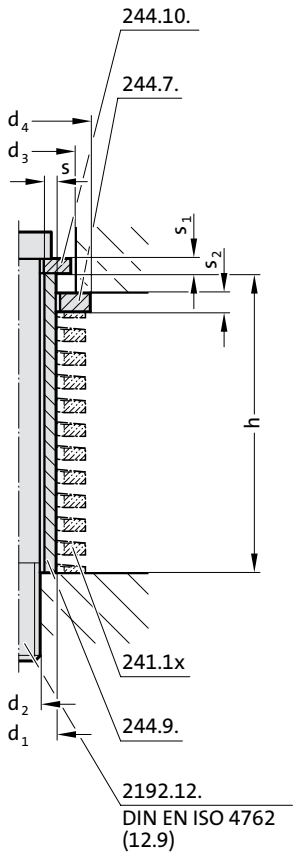


### Ordering Code (example):

| | | |
|---|---|---|
| Spring unit for helical spring | = | 244.15. |
| not loaded | = | 0. |
| for springs ø = 40 mm | = | 040. |
| Spacer tube length h = 48 mm | = | 048 |
| Order No | = | 244.15.0.040.048 |

## 2441.15.1. Spring unit for helical spring

Spring unit consists of:

Allen screw DIN EN ISO 4762 (12.9) 2192.12.

Washer 244.7.

Spacer tube 244.9.

Sheave 244.10.

Threaded disc 2441.15.

Compression springs ordered separately: 241.14., 241.15., 241.16., 241.17.

| Spring ø | $d_1 \times s$ | h* | $d_2$ | $d_3$ | $d_4$ | $s_1$ | $s_2$ |
|---|---|---|---|---|---|---|---|
| 20 | 10 × 1,8 | | M 6 | 11 | 25 | 3 | 4 |
| 25 | 12 × 1,8 | | M 8 | 14 | 25 | 3 | 4 |
| 32 | 16 × 2,5 | | M 10 | 18 | 38 | 4 | 5 |
| 40 | 20 × 3,5 | | M 12 | 22 | 38 | 4 | 5 |
| 50 | 25 × 4,0 | | M 16 | 27 | 50 | 6 | 6 |

*h see selection chart spacer tube 244.9. and spring Data

2441.15.1. **Mounting examples**

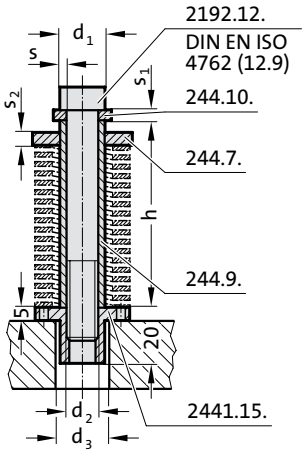


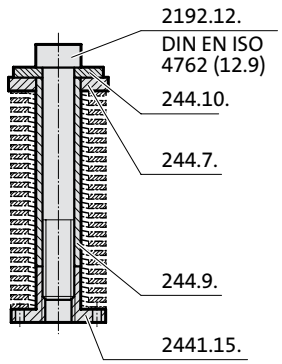


### Ordering Code (example):

| | | |
|---|---|---|
| Spring unit for helical spring | = | 2441.15. |
| preloaded | = | 1. |
| for springs ø = 40 mm | = | 040. |
| Spacer tube length h = 48 mm | = | 048 |
| Order No | = | 2441.15.1.040.048 |

# SPRING AND SPACER UNIT

**Mounting example:**

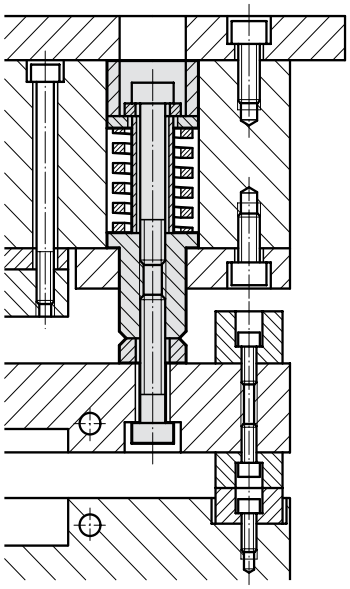

## 244.□□.□□□.10

Application without Spacer Sleeve
(c'bored hole)

## 244.□□.□□□.11

Application with Spacer Sleeve
(straight hole)

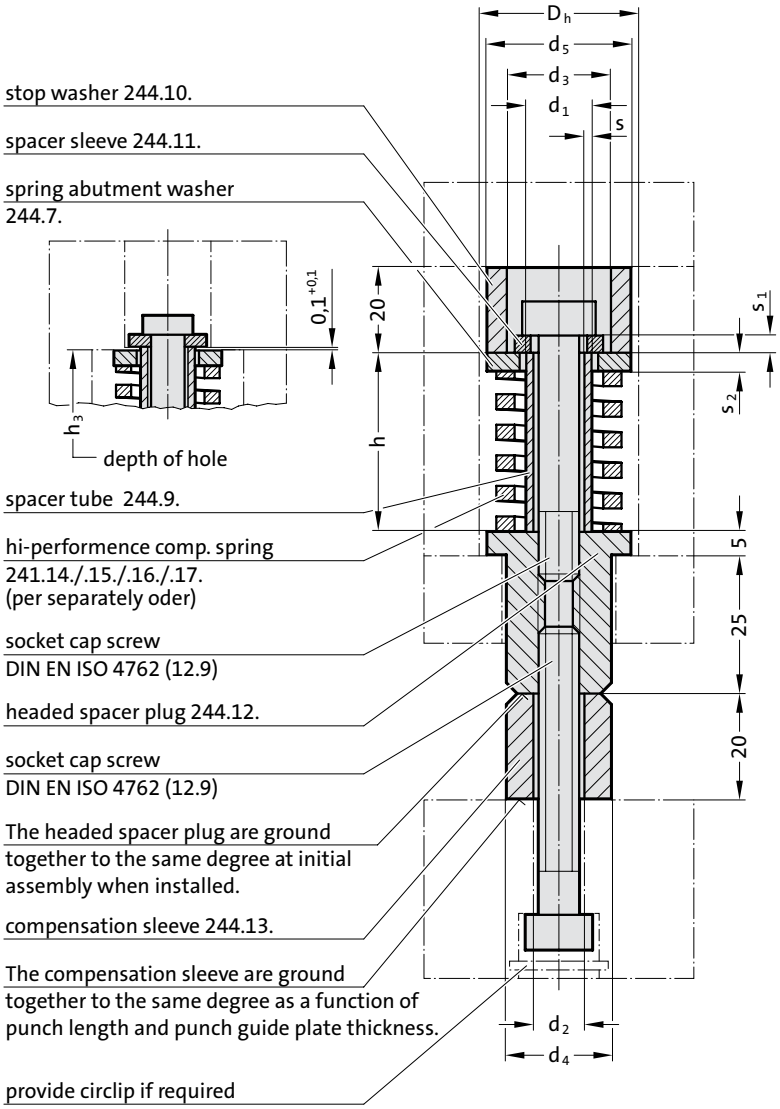


**Note:**

After fitting, the resilient collar pins are ground to the same length.
Please note: Regrinding of the punch length = regrinding of the spacer.
Match the blind hole drill depth $h_3$ and/or spacer height so that the screw is released by about 0.1 mm.

### 244.20./25./32./40. Spring and spacer unit

| Spring ø | $d_1 \times s$ | h* | socket cap screw $d_2$ | $d_3$ | $d_4$ | $d_5$ | $D_h$ | $s_1$ | $d_2$ |
|---|---|---|---|---|---|---|---|---|---|
| 20 | 10 × 1,8 | | M 6 | 18 | 20 | 25 | 26 | 3 | 4 |
| 25 | 12 × 1,8 | | M 8 | 18 | 20 | 25 | 26 | 3 | 4 |
| 32 | 16 × 2,5 | | M 10 | 30 | 32 | 38 | 40 | 4 | 5 |
| 40 | 20 × 3,5 | | M 12 | 30 | 32 | 38 | 40 | 4 | 5 |

H* see spacer tube length 244.9. and spring selection 241.1x.

**Ordering Code (example):**

| | | |
|---|---|---|
| Spring and spacer unit | | |
| Spring ø = 20 mm | = 244.20. | |
| spacer tube length h = 38 mm with screw | = | 038. |
| with spacer sleeve 244.11. | = | 11 |
| Order No | = 244.20.038.11 | |

# COMBINATION SPRING- AND SPACER UNITS
# APPLICATION EXAMPLES
# SPRING CHARACTERISTICS

## Without Spacer Sleeve
(with c`bored hole)
244.□□.□□□.10.

## With Spacer Sleeve
(with straight hole)
244.□□.□□□.11.

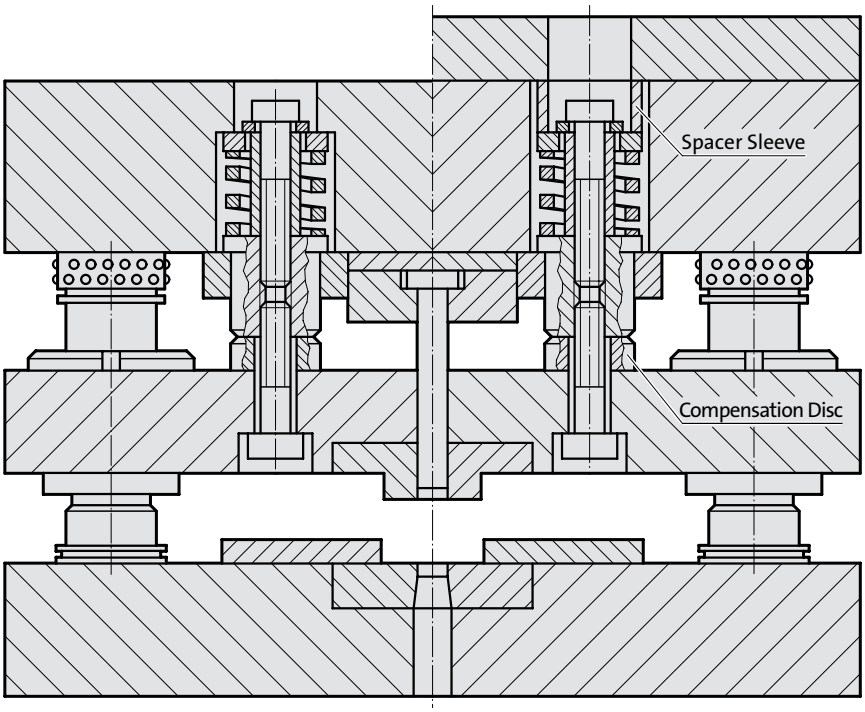


### Description:

The preloaded Combination Spring- and Spacer Unit combines the functions of providing the spring force and of spacing the stripper in one constructional element, whilst conventional designs employed two.

The resulting advantages therefore consist of space savings and reduced machining cost with regard to the various die members.

The execution with spacer sleeve makes it possible to exchange the whole unit by simply removing the top clamping plate.

Removal of the compensation disc gives unimpeded access to the punches – for the purpose of sharpening/grinding.

### Important Notice:

Regrinding of stamp in mm = regrinding of spacer. This means that the spring force and displacement always remain exactly the same.

Helical compression springs must be ordered separately, see at the beginning of chapter F.

### 244.20. 244.25. 244.32. 244.40. Combination Spring- and Spacer Units

#### Spring Characteristics

| Order No. | Spring dimensions $D_h \times l_o$ | Pretension path | Spring preload force, Type | | | | max. working stroke of spring (excl. preload), Type | | | | Spring rate in N/mm Type | | | | max. spring forces (N) at 80% max. spring range $s_2$ | | | |
|---|---|---|---|---|---|---|---|---|---|---|---|---|---|---|---|---|---|---|
| | | | 241.14 | 241.15 | 241.16 | 241.17 | .14 | .15 | .16 | .17 | .14 | .15 | .16 | .17 | .14 | .15 | .16 | .17 |
| 244.20.027.□□ | 20 x 25 | 2 | 111,6 | 196,2 | 432,0 | 586,4 | 10,4 | 8,8 | 6,7 | 6,2 | 55,8 | 98,1 | 216,0 | 293,2 | 580 | 863 | 1447 | 1818 |
| 244.20.033.□□ | 20 x 32 | 3 | 135,0 | 218,1 | 504,0 | 672,6 | 12,8 | 10,4 | 8,4 | 7,8 | 45,0 | 72,7 | 168,0 | 224,2 | 576 | 756 | 1411 | 1749 |
| 244.20.038.□□ | 20 x 38 | 4 | 133,6 | 224,0 | 516,0 | 708,4 | 15,2 | 12,8 | 10,0 | 9,6 | 33,4 | 56,0 | 129,0 | 177,1 | 508 | 717 | 1290 | 1700 |
| 244.20.044.□□ | 20 x 44 | 4 | 120,0 | 190,4 | 448,0 | 596,4 | 18,4 | 15,2 | 11,6 | 11,2 | 30,0 | 47,6 | 112,0 | 149,1 | 552 | 724 | 1299 | 1670 |
| 244.20.048.□□ | 20 x 51 | 7 | 171,5 | 291,9 | 658,0 | 896,7 | 20,8 | 16,8 | 13,2 | 12,8 | 24,5 | 41,7 | 94,0 | 128,1 | 510 | 701 | 1241 | 1640 |
| | | | | | | | | | | | | | | | | | | |
| 244.25.027.□□ | 25 x 25 | 2 | 200,0 | 294,0 | 750,0 | – | 10,4 | 8,8 | 7,2 | – | 100,0 | 147,0 | 375,0 | – | 1040 | 1294 | 2700 | – |
| 244.25.033.□□ | 25 x 32 | 3 | 240,9 | 354,3 | 891,0 | 1123,8 | 12,8 | 10,4 | 8,4 | 8,0 | 80,3 | 118,1 | 297,0 | 374,6 | 1028 | 1228 | 2495 | 2997 |
| 244.25.038.□□ | 25 x 38 | 4 | 248,0 | 372,4 | 876,0 | 1384,8 | 15,2 | 12,8 | 10,4 | 9,6 | 62,0 | 93,1 | 219,0 | 346,2 | 942 | 1192 | 2278 | 3324 |
| 244.25.044.□□ | 25 x 44 | 4 | 212,0 | 323,2 | 748,0 | 976,8 | 18,4 | 15,2 | 12,4 | 11,2 | 53,0 | 80,9 | 187,0 | 244,2 | 975 | 1228 | 2319 | 2735 |
| 244.25.048.□□ | 25 x 51 | 7 | 308,7 | 480,9 | 1092,0 | 1453,9 | 20,0 | 16,8 | 14,4 | 12,8 | 44,1 | 68,7 | 156,0 | 207,7 | 882 | 1154 | 2246 | 2659 |
| | | | | | | | | | | | | | | | | | | |
| 244.32.038.□□ | 32 x 38 | 5 | 470,5 | 925,5 | 1940,0 | 2643,0 | 15,2 | 12,8 | 9,6 | 8,8 | 94,1 | 185,1 | 388,0 | 528,6 | 1430 | 2369 | 3725 | 4652 |
| 244.32.044.□□ | 32 x 44 | 5 | 398,0 | 790,5 | 1620,0 | 2135,5 | 17,6 | 15,2 | 11,2 | 10,4 | 79,6 | 158,1 | 324,0 | 424,7 | 1401 | 2403 | 3629 | 4417 |
| 244.32.048.□□ | 32 x 51 | 8 | 536,0 | 1072,8 | 2176,0 | 2826,4 | 20,0 | 16,8 | 13,2 | 12,0 | 67,0 | 134,1 | 272,0 | 353,3 | 1340 | 2253 | 3590 | 4240 |
| 244.32.061.□□ | 32 x 64 | 8 | 424,0 | 792,8 | 1696,0 | 2155,2 | 25,6 | 21,6 | 17,2 | 16,0 | 53,0 | 99,1 | 212,0 | 269,4 | 1357 | 2141 | 3646 | 4310 |
| 244.32.072.□□ | 32 x 76 | 9 | 396,9 | 724,5 | 1548,0 | 1968,3 | 31,2 | 25,6 | 20,8 | 19,2 | 44,1 | 80,5 | 172,0 | 218,7 | 1376 | 2061 | 3578 | 4199 |
| | | | | | | | | | | | | | | | | | | |
| 244.40.048.□□ | 40 x 51 | 8 | 736,0 | 1432,0 | 2801,6 | 5027,2 | 20,0 | 16,8 | 13,6 | 12,0 | 92,0 | 179,0 | 350,2 | 628,4 | 1840 | 3007 | 4763 | 7541 |
| 244.40.061.□□ | 40 x 64 | 8 | 584,8 | 1120,0 | 2152,0 | 3905,6 | 25,6 | 20,8 | 17,6 | 15,2 | 73,1 | 140,0 | 269,0 | 488,2 | 1871 | 2912 | 4734 | 7421 |
| 244.40.072.□□ | 40 x 76 | 9 | 567,9 | 972,9 | 1971,0 | 3413,7 | 30,4 | 25,6 | 21,6 | 19,2 | 63,1 | 108,1 | 219,0 | 379,3 | 1918 | 2767 | 4730 | 7283 |

# SPRING AND SPACER UNIT
# LOW INSTALLATION SPACE

## 244.□□.3.□□□.10

Application without Spacer Sleeve
(c'bored hole)

## 244.□□.3.□□□.11

Application with Spacer Sleeve
(straight hole)

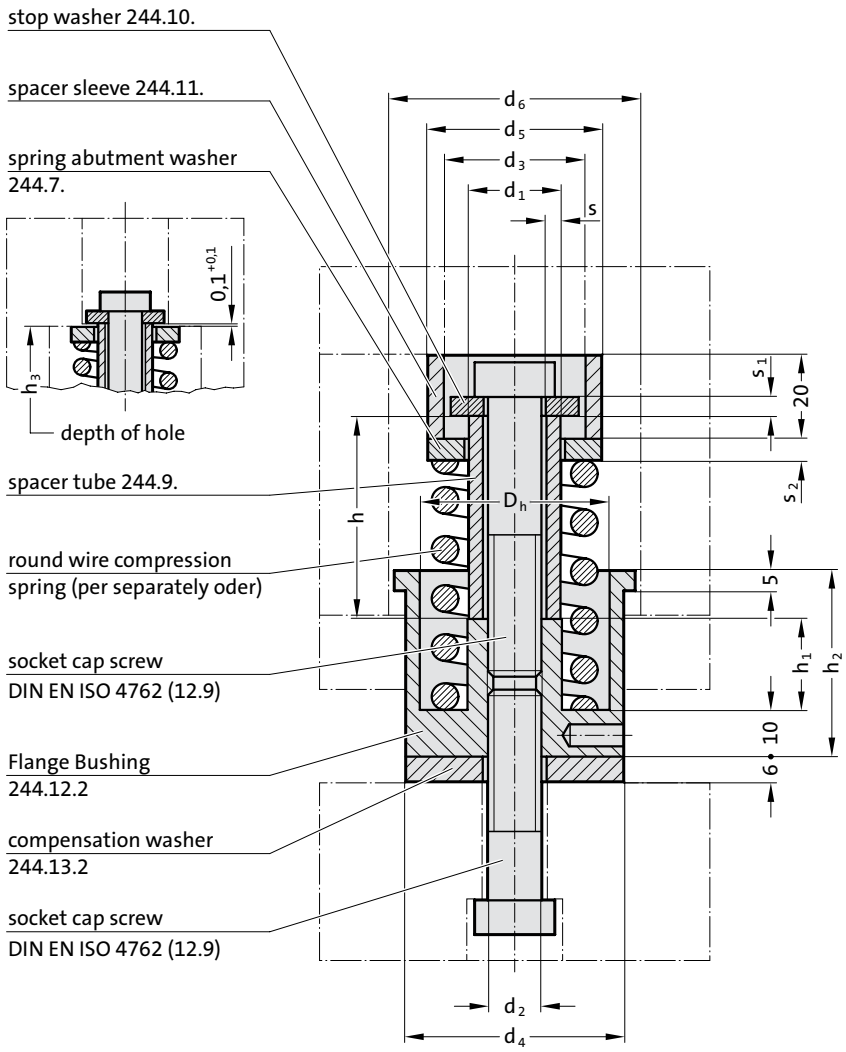


**Mounting example:**

with spacer sleeve

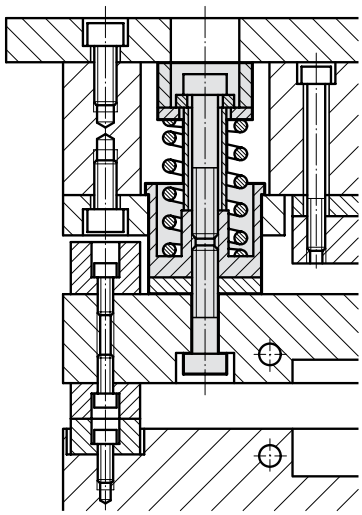

**Note:**

After fitting, the flange bushings are ground to the same length.

Note: Regrinding of the punch length = regrinding of the spacer.

Adjust depth of blind hole h3 or height of spacer sleeve so that the screw is released by about 0.1 mm.

### 244.20./25./32./40.3. Spring- and Spacer Units low installation space

| Spring ø | $d_1 \times s$ | h* | $d_2$ | $d_3$ | $d_4$ | $d_5$ | $d_6$ | $D_h$ | $s_1$ | $s_2$ | $h_1$ | $h_2$ |
|---|---|---|---|---|---|---|---|---|---|---|---|---|
| 20 | 10 × 1,8 | | M 6 | 18 | 25 | 25 | 31 | 20 | 3 | 4 | 5 | 36 |
| 25 | 12 × 1,8 | | M 8 | 18 | 32 | 25 | 38 | 25 | 3 | 4 | 10 | 36 |
| 32 | 16 × 2,5 | | M 10 | 30 | 38 | 38 | 44 | 32 | 4 | 5 | 16 | 40 |
| 40 | 20 × 3,5 | | M 12 | 30 | 47 | 38 | 54 | 40 | 4 | 5 | 18 | 40 |

H* see spacer tube length 244.9. and spring selection 241.1x.

**Ordering Code (example):**

| | |
|---|---|
| Spring- and Spacer Unit low installation space | |
| for springs ø = 20 mm | = 244.20.3. |
| spacer tube length h = 33 mm | = 033. |
| with spacer sleeve 244.11. | = 11 |
| Order No | = 244.20.3.033.11 |

# SPRING AND SPACER UNIT

**Mounting example**

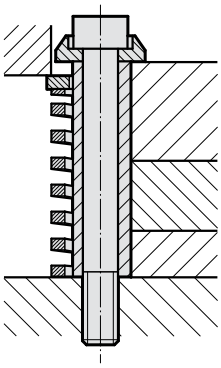

244.16.

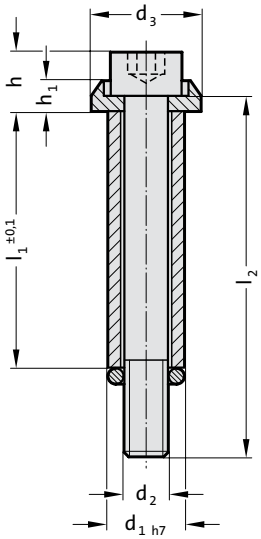


**Description:**
These units can be used as an alternative to shoulder screws.
**Advantages:**
Precision length adjustments by way of grinding. The units have many uses – as can be seen from the installation examples below.

**Material:**
Spacer tube: Steel, hardened
Socket cap screw DIN EN ISO 4762 (12.9)

**Execution:**
Outside diameter ground
Tolerance: $h_7$

**Note:**
The units are supplied with a retaining O-ring **wich must be removed before application.**

### 244.16. Spring and spacer unit

| $d_1$ | 10 | 12.5 | 15 | 17.5 | 23 | 25 |
|---|---|---|---|---|---|---|
| $d_2$ | M6 | M8 | M10 | M12 | M16 | M16 |
| Tightening torque [Nm] | 13 | 32 | 65 | 120 | 290 | 290 |
| $d_3$ | 15 | 19 | 23 | 27 | 34 | 40 |
| h | 10 | 13 | 15 | 18 | 24 | 24 |
| $h_1$ | 5.5 | 6.5 | 7.5 | 9 | 11 | 11 |
| $l_1$ | $l_2$ | | | | | |
| 20 | 35 | 35 | | | | |
| 25 | 40 | | | | | |
| 30 | 45 | 45 | 50 | 50 | | |
| 35 | 50 | 50 | 55 | | | |
| 40 | 55 | 55 | 60 | 60 | | |
| 45 | 60 | 60 | 65 | 65 | | |
| 50 | 65 | 65 | 70 | 70 | 80 | |
| 55 | 70 | 70 80 | 75 | 80 | | |
| 60 | 80 | 80 | 80 90 | 90 | 90 | |
| 70 | 90 | 90 | 90 100 | 100 | 100 | |
| 80 | 100 | 100 | 100 110 | 110 115 120 | 110 125 130 | 110 |
| 90 | 110 | 110 | 110 | 120 | 120 | 120 |
| 100 | 120 | 120 | 120 | 130 135 140 | 130 140 145 | 130 |
| 110 | | | | 140 | 140 150 | |
| 120 | | | 140 | 150 | 150 160 | |
| 140 | | | | 180 | 180 | |
| 150 | | | | | 180 | |
| 160 | | | | | 200 | |

AUSLAUFEND

**Ordering Code (example):**

| | | | |
|---|---|---|---|
| Spring and spacer unit | | =244.16. | |
| Nominal diameter $d_1$ | 15 mm | = | 150. |
| Length $l_1$ | 100 mm | = | 100. |
| Screw length $l_2$ | 120 mm | = | 120 |
| Order No | | =244.16. | 150.100. 120 |

# SPRING AND SPACER UNIT, WITH HEXAGON SOCKET COUNTERSUNK HEAD CAP SCREW

## 244.18.

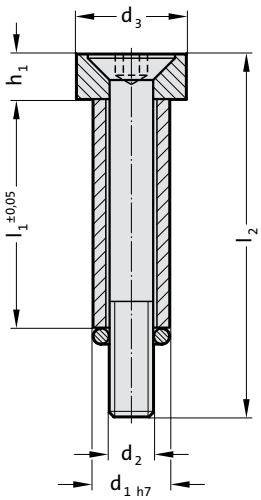


**Mounting example**

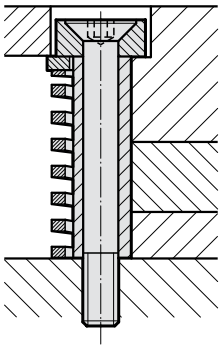

### Description:

These units can be used as an alternative to shoulder screws.

**Advantages:**

Precision length adjustments by way of grinding. The units have many uses – as can be seen from the installation examples below.

### Material:

Spacer tube: Steel, hardened

Countersunk head cap screw DIN EN ISO 10642 (10.9)

### Execution:

Outside diameter ground

Tolerance: $h_7$

### Note:

The units are supplied with a retaining O-ring **wich must be removed before application.**

### 244.18. Spring and spacer unit, with hexagon socket countersunk head cap screw

| $d_1$ | 10 | 12.5 | 15 | 17.5 | 23 |
|---|---|---|---|---|---|
| $d_2$ | M6 | M8 | M10 | M12 | M16 |
| Tightening torque [Nm] | 12 | 28 | 56 | 98 | 240 |
| $d_3$ | 15 | 19 | 23 | 27 | 34 |
| $h_1$ | 6 | 8 | 10 | 12 | 16 |
| $l_1$ | $l_2$ | | | | |
| 20 | 35 | | | | |
| 25 | 40 | 45 | | | |
| 30 | 45 | 50 | 55 | 60 | |
| 35 | 50 | 55 | 60 | 70 | |
| 40 | 55 | 60 | 65 | 70 | |
| 45 | 60 | 70 | 70 | 80 | |
| 50 | 65 | 70 | 80 | 80 | 90 |
| 55 | | 80 | 80 | 90 | 90 |
| 60 | | 80 | 90 | 90 | 100 |
| 70 | | 90 | 100 | 100 | 110 |
| 80 | | 100 | 110 | 110 | 120 |
| 90 | | | 120 | 120 | 140 |
| 100 | | | | | 140 |
| 110 | | | | | 150 |
| 120 | | | | | 150 |

### Ordering Code (example):

| | | |
|---|---|---|
| Spring and spacer unit, with hexagon socket countersunk head cap screw | | =244.18. |
| Nominal diameter $d_1$ | 15 mm | = 150. |
| Length $l_1$ | 60 mm | = 060. |
| Screw length $l_2$ | 90 mm | = 090 |
| Order No | | =244.18. 150.060. 090 |

# SHOULDER SCREW

**Mounting example**

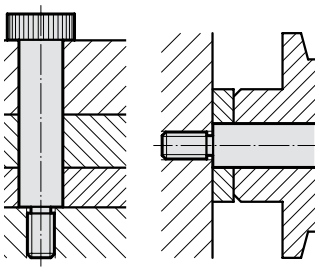

244.17.

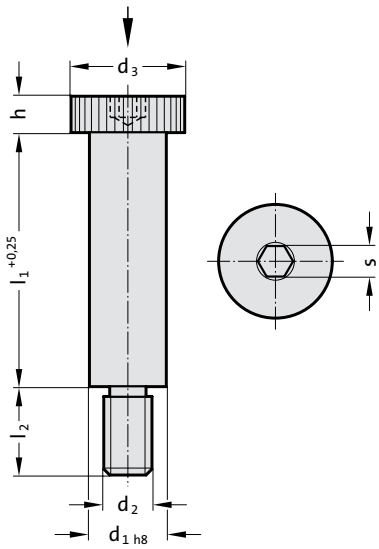


**Material:**
High tensile steel,
heat treated to 12.9 ISO 898-1.

**Execution:**
$d_1$ ground,
heads knurled.

### 244.17. Shoulder screw

| $d_1$ | 6 | 8 | 10 | 12 | 16 | 20 | 24 |
|---|---|---|---|---|---|---|---|
| $d_2$ | M5 | M6 | M8 | M10 | M12 | M16 | M20 |
| Tightening torque [Nm] | 7 | 13 | 32 | 65 | 120 | 290 | 500 |
| $d_3$ | 10 | 13 | 16 | 18 | 24 | 30 | 36 |
| h | 4.5 | 5.5 | 7 | 9 | 11 | 14 | 16 |
| s | 3 | 4 | 5 | 6 | 8 | 10 | 12 |
| $l_2$ | 9.5 | 11 | 13 | 16 | 18 | 22 | 27 |
| $l_1$ | | | | | | | |
| 10 | ● | ● | | | | | |
| 12 | ● | ● | | | | | |
| 16 | ● | ● | ● | ● | | | |
| 20 | ● | ● | ● | ● | | | |
| 25 | ● | ● | ● | ● | ● | | |
| 30 | ● | ● | ● | ● | ● | | |
| 35 | ● | ● | ● | ● | ● | | |
| 40 | ● | ● | ● | ● | ● | ● | |
| 45 | | | ● | ● | ● | ● | |
| 50 | | ● | ● | ● | ● | ● | ● |
| 55 | | | ● | ● | ● | ● | |
| 60 | | | ● | ● | ● | ● | ● |
| 65 | | | ● | ● | ● | ● | |
| 70 | | | ● | ● | ● | ● | ● |
| 80 | | | ● | ● | ● | ● | ● |
| 90 | | | | ● | ● | ● | ● |
| 100 | | | | ● | ● | ● | ● |
| 120 | | | | | ● | ● | ● |

**Ordering Code (example):**

| | | | |
|---|---|---|---|
| Shoulder screw | | =244.17. | |
| Nominal diameter $d_1$ | 12 mm | = | 120. |
| Guide length $l_1$ | 55 mm | = | 055 |
| Order No | | =244.17. | 120.055 |

# PIPE PLUG (FOR COMPRESSSION SPRING ADJUSTEMENT)

241.00.1.

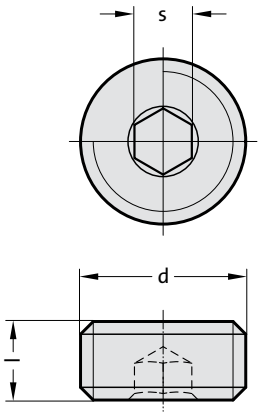


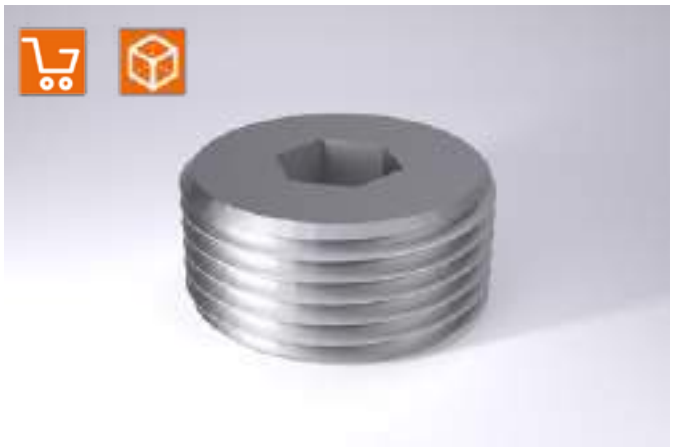

**Mounting example**

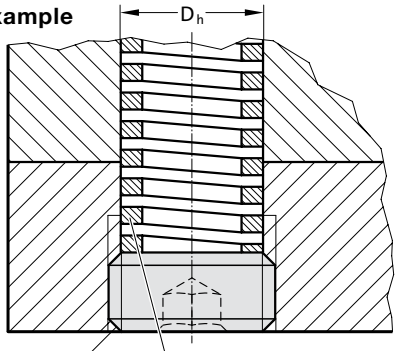


secured with
LOCTITE
Type 281.243

compression spring to separate
order - see High Performance
Compression Springs

**Description:**

These set screws can be used as adjustable spring stops. They are available for all customary spring sizes from ø 10 to ø 40. The set screws are suitable for springs 241.14. to .17.
Their use offers the following advantages:
– Adjustable spring tension from under the bottom bolster, without any dismantling.
– Exchange of springs without dismantling.
– Through-holes instead of blind holes for spring accommodation.

**241.00.1. Pipe plug (for compresssion spring adjustement)**

| Order No | d | l | s | Spring-ø | $D_h$ |
|---|---|---|---|---|---|
| 241.00.1.12 | M12x1,5 | 10 | 6 | 10 | 10.5 |
| 241.00.1.14 | M14x1,5 | 10 | 6 | 12.5 | 12.5 |
| 241.00.1.18 | M18x1,5 | 10 | 8 | 16 | 16.5 |
| 241.00.1.22 | M22x1,5 | 10 | 8 | 20 | 20.5 |
| 241.00.1.28 | M28x1,5 | 12 | 10 | 25 | 26.5 |
| 241.00.1.35 | M35x1,5 | 12 | 10 | 32 | 33.5 |
| 241.00.1.42 | M42x1,5 | 12 | 10 | 40 | 40.5 |

# COMPRESSION PAD
# SHEDDER INSERT

2471.6.

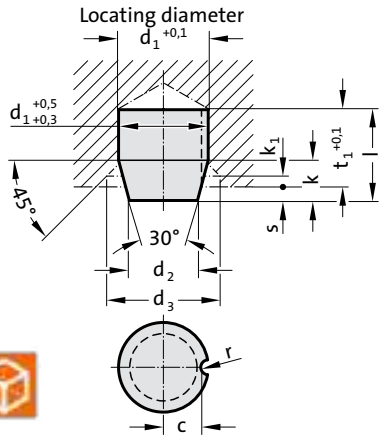


**Material:**
FIBROFLEX®
Hardness 90 Shore A

**2471.6. Compression Pad**

| Order No | $d_1$ | $d_2$ | $d_3$ | l | k | $k_1$ | $t_1$ | r | c | Compressive force [N] | at s |
|---|---|---|---|---|---|---|---|---|---|---|---|
| 2471.6.006 | 6 | 3.6 | 10 | 9.5 | 4.5 | 1 | 8 | 0 | 0 | 100 | 1.5 |
| 2471.6.010 | 10 | 6 | 16 | 15.5 | 7.5 | 2 | 13 | 1 | 4 | 450 | 2.5 |
| 2471.6.016 | 16 | 9.5 | 22 | 25 | 12 | 5 | 21 | 1.5 | 6.5 | 1,500 | 4 |
| 2471.6.024 | 24 | 18 | 32 | 25 | 10 | 2 | 21 | 2 | 10 | 3,000 | 4 |
| 2471.6.030 | 30 | 20 | 38 | 35 | 19 | 10 | 30 | 2.5 | 12.5 | 3,000 | 5 |
| 2471.6.032 | 32 | 24 | 40 | 32 | 14 | 4 | 26 | 3 | 13 | 12,000 | 6 |
| 2471.6.039 | 39.5 | 30 | 50 | 40 | 16 | 4.75 | 34 | 3 | 16.8 | 25,000 | 6 |

**Mounting example**

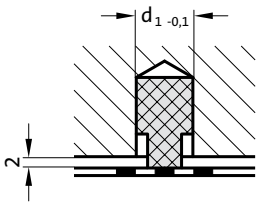


247.6.

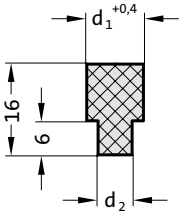


**Description:**
Instead of conventional shedder pins and their springs as well as set screws, FIBROFLEX® Shedder Inserts are simply pressed into matching holes (see mounting example).

**Material:**
FIBROFLEX®
Hardness 90 Shore A

**247.6. Shedder insert**

| Order No | $d_1$ | $d_2$ | Stripping force [daN] |
|---|---|---|---|
| 247.6.008.016 | 8 | 4 | 20 |
| 247.6.010.016 | 10 | 6 | 25 |
| 247.6.012.016 | 12 | 8 | 30 |

# SETTING-UP BUMPER, ROUND

## 2531.7.

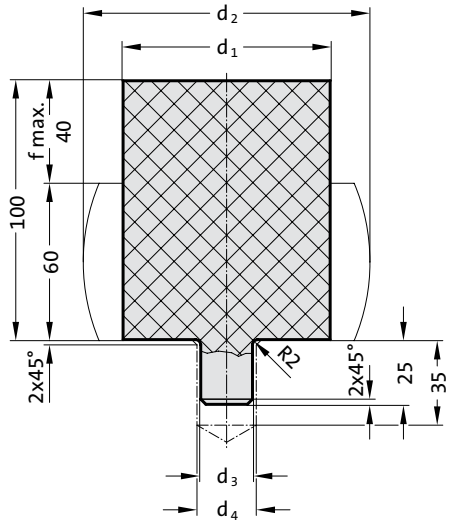

**Description:**
Setting up bumpers are used for setting down and setting up tools and replace shear pins.

**Material:**
FIBROFLEX®
Hardness 95 Shore A

**Attention:**
Setting up bumpers are not suitable for continuous use. To prevent damage when setting down tools, ensure that the setting up bumpers are large enough to withstand 1.5 times the weight of the tool (see table).

**Implementation:**
1. When setting up slowly move the ram into the bottom position.
2. Clamp the tool, then move the ram back to the top position (with the setting up bumper compressed to a height of 60 mm).
3. After setting up, remove the setting up bumpers and place them in the storage hole on the tool.

**Mounting example**

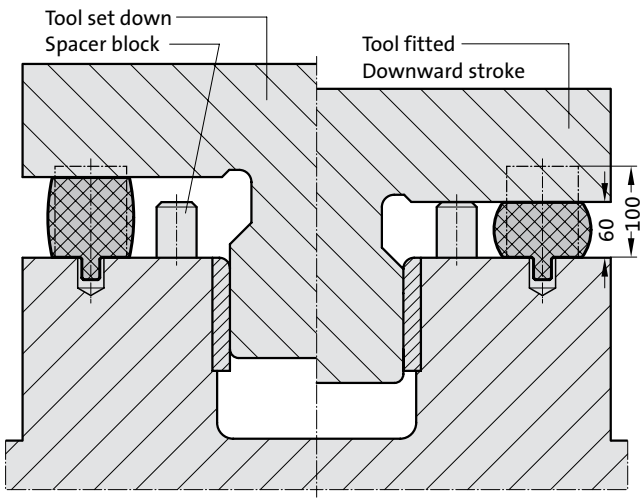


**2531.7. Setting-up bumper, round**

| Order No | $d_1$ | $d_2$ | $d_3$ | $d_4$ | f max. | Load capacity in daN bei f=20 | Load capacity in daN bei f=25 | Load capacity in daN bei f=40 | Admissible tool weight in kg for 4 setting up bumpers f=20/safety factor 1,5 |
|---|---|---|---|---|---|---|---|---|---|
| 2531.7.063 | 63 | 86 | 16 | 18 | 40 | 2,200 | 2,800 | 4,800 | 5,800 |
| 2531.7.080 | 80 | 111 | 20 | 22 | 40 | 3,500 | 4,600 | 8,500 | 9,300 |
| 2531.7.100 | 100 | 136 | 20 | 22 | 40 | 5,000 | 6,700 | 11,700 | 13,300 |
| 2531.7.125 | 125 | 171 | 25 | 28 | 40 | 7,600 | 9,400 | 18,900 | 20,200 |

# SETTING-UP BUMPER, SQUARE

252.7.

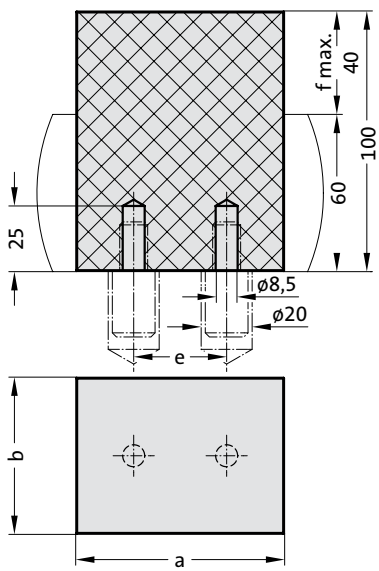


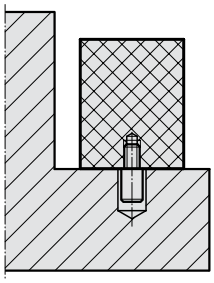

The setting up bumper is located in the storage hole while the toll is in use (guide screw 244.5.13.040 withdrawn).

### Mounting example

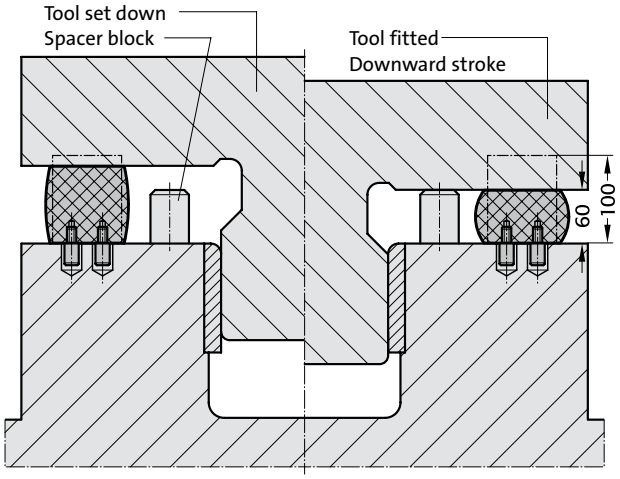


### Description:

Setting up bumpers are used for setting down and setting up tools and replace shear pins.

### Material:

FIBROFLEX®
Hardness 95 Shore A

### Attention:

Setting up bumpers are not suitable for continuous use. To prevent damage when setting down tools, ensure that the setting up bumpers are large enough to withstand 1.5 times the weight of the tool (see table).

### Implementation:

1. When setting up slowly move the ram into the bottom position.
2. Clamp the tool, then move the ram back to the top position (with the setting up bumper compressed to a height of 60 mm).
3. After setting up, remove the setting up bumpers and place them in the storage hole on the tool.

### 252.7. Setting-up bumper, square

| Order No | a | b | e | Load capacity in daN bei f=20 | Admissible tool weight in kg for 4 setting up bumpers f=20/safety factor 1,5 |
|---|---|---|---|---|---|
| 252.7.080.060 | 80 | 60 | 36 | 2,700 | 7,100 |
| 252.7.100.080 | 100 | 80 | 50 | 6,200 | 16,500 |
| 252.7.125.100 | 125 | 100 | 60 | 8,600 | 22,900 |
| 252.7.180.100 | 180 | 100 | 100 | 13,600 | 36,200 |

# SPACER FOR DIE RELEASE

## 2533.10.

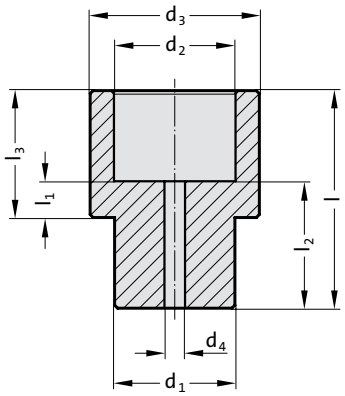

**Description:**
The spacers are inserted into the die for storage and transport purposes.

**Material:**
Greenamid PA6 (GF30), colour: yellow

**Mounting example**

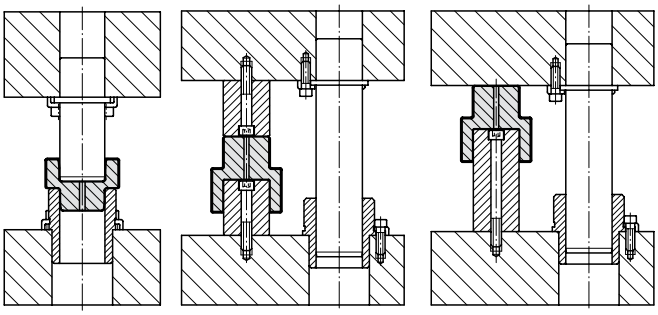

**2533.10. Spacer for die release**

| Order No | $d_2$ | $d_1$ | l | $l_1$ | $l_2$ | $l_3$ | $d_3$ | $d_4$* | max. carrying capacity [daN] |
|---|---|---|---|---|---|---|---|---|---|
| 2533.10.015 | 15.2 | 14.8 | 52 | 12 | 32 | 32 | 25 | 7 | 2,500 |
| 2533.10.016 | 16.2 | 15.8 | 52 | 12 | 32 | 32 | 26 | 7 | 2,500 |
| 2533.10.018 | 18.2 | 17.8 | 52 | 12 | 32 | 32 | 29 | 7 | 2,700 |
| 2533.10.019 | 19.2 | 18.8 | 52 | 12 | 32 | 32 | 30 | 7 | 2,700 |
| 2533.10.020 | 20.2 | 19.8 | 52 | 12 | 32 | 32 | 31 | 7 | 2,700 |
| 2533.10.024 | 24.2 | 23.8 | 56 | 12 | 34 | 34 | 36 | 7 | 3,600 |
| 2533.10.025 | 25.2 | 24.8 | 56 | 12 | 34 | 34 | 37 | 7 | 3,600 |
| 2533.10.030 | 30.2 | 29.8 | 60 | 12 | 36 | 36 | 44 | 7 | 4,500 |
| 2533.10.032 | 32.2 | 31.8 | 60 | 12 | 36 | 36 | 46 | 7 | 4,500 |
| 2533.10.038 | 38.2 | 37.8 | 73 | 12 | 43 | 43 | 54 | 7 | 6,000 |
| 2533.10.040 | 40.2 | 39.8 | 73 | 12 | 43 | 43 | 56 | 7 | 6,000 |
| 2533.10.042 | 42.2 | 41.8 | 73 | 12 | 43 | 43 | 58 | 7 | 6,000 |
| 2533.10.048 | 48.2 | 47.8 | 84 | 12 | 48 | 49 | 66 | 8.6 | 7,500 |
| 2533.10.050 | 50.2 | 49.8 | 84 | 12 | 48 | 49 | 68 | 8.6 | 7,500 |
| 2533.10.052 | 52.2 | 51.8 | 84 | 12 | 48 | 49 | 70 | 8.6 | 7,500 |
| 2533.10.060 | 60.2 | 59.8 | 92 | 12 | 52 | 53 | 79 | 8.6 | 9,400 |
| 2533.10.063 | 63.2 | 62.8 | 92 | 12 | 52 | 53 | 82 | 8.6 | 9,400 |
| 2533.10.080 | 80.2 | 79.8 | 94 | 14 | 54 | 54 | 102 | 8.6 | 12,000 |
| 2533.10.100 | 100.2 | 99.8 | 96 | 16 | 56 | 56 | 123 | 8.6 | 15,000 |
| 2533.10.125 | 125.2 | 124.8 | 96 | 16 | 56 | 56 | 150 | 8.6 | 18,000 |

*Tap hole for thread, created by customer

# SPACER WITH SPRING FOR DIE RELEASE

2533.20.

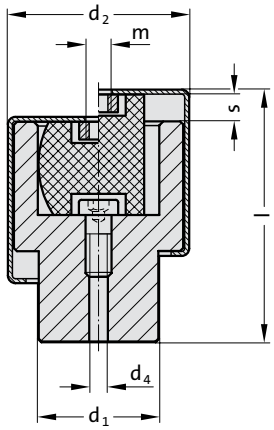


**Mounting example**

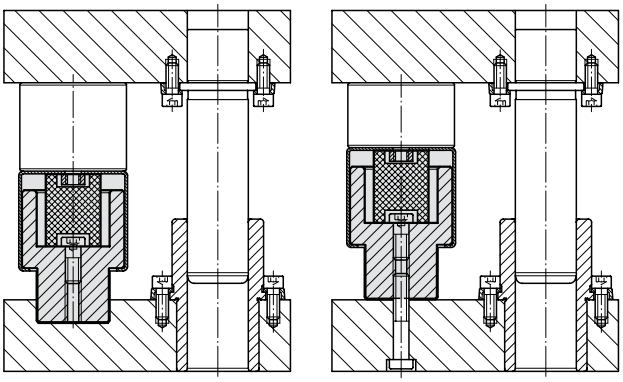

**Description:**
The spacers with springs are inserted into the die for storage and transport purposes.

**Material:**
Spacer: Greenamid PA6 (GF30), colour: yellow
Spring: PU
Housing: steel, painted yellow

**2533.20. Spacer with spring for die release**

| Order No | $d_2$ | $d_1$ | s | l | m | $d_4$* | Spring force [daN] | max. carrying capacity [daN] |
|---|---|---|---|---|---|---|---|---|
| 2533.20.040 | 60.5 | 39.8 | 10 | 84 | M8 | 6.8 | 600 | 6,000 |
| 2533.20.050 | 72.5 | 49.8 | 10 | 95.5 | M10 | 8.6 | 800 | 7,500 |
| 2533.20.063 | 87 | 62.8 | 10 | 103 | M10 | 8.6 | 1,250 | 9,400 |
| 2533.20.080 | 109 | 79.8 | 10 | 105.5 | M10 | 8.6 | 2,300 | 12,000 |
| 2533.20.100 | 129 | 99.8 | 10 | 107 | M10 | 8.6 | 3,600 | 15,000 |
| 2533.20.125 | 155.5 | 124.8 | 10 | 108 | M10 | 8.6 | 7,000 | 18,000 |

*Tap hole for thread, created by customer

# HINGE FOR SPACER

## 2533.00.01.

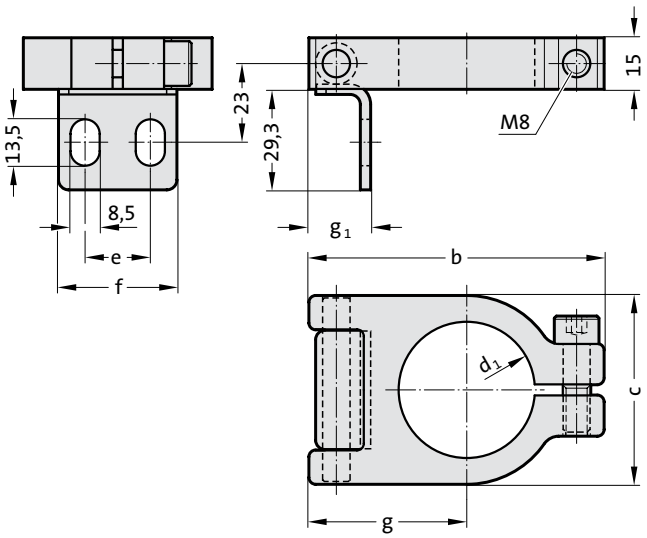

**Material:**
Steel, burnished

**Note:**
for 2533.10 and 2533.20.
Screws are not included.

**Mounting example**

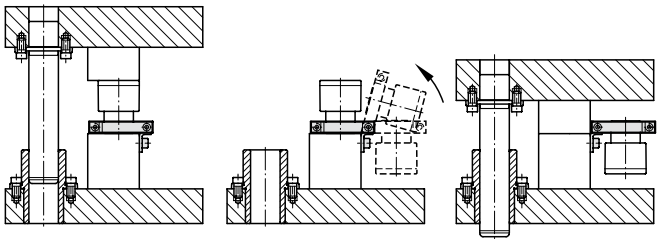

**2533.00.01. Hinge for spacer**

| Order No | $d_1$ | b | c | e | f | g | $g_1$ |
|---|---|---|---|---|---|---|---|
| 2533.00.01.040 | 39.8 | 86 | 55 | 19 | 34.5 | 46 | 18 |
| 2533.00.01.050 | 49.8 | 97 | 70 | 25 | 44.5 | 53.5 | 17.5 |
| 2533.00.01.063 | 62.8 | 106 | 80 | 30 | 49.5 | 57 | 17.5 |
| 2533.00.01.080 | 79.8 | 140 | 105 | 40 | 69.5 | 72 | 19 |
| 2533.00.01.100 | 99.8 | 156 | 125 | 50 | 79.5 | 80 | 18.5 |
| 2533.00.01.125 | 124.8 | 183 | 150 | 70 | 99.5 | 93 | 18.5 |

# STRIPPERS FOR BLANKING DIES
# TO MERCEDES-BENZ- / VW STANDARD / VDI 3362

**Material:**
Perbunan
Hardness according to DIN 53505:
Shore A65±5

**Execution:**
Tolerances for finished parts to DIN ISO 3302-1

**Application:**
For blanking die tools

Supplied without screws

**Mounting example**

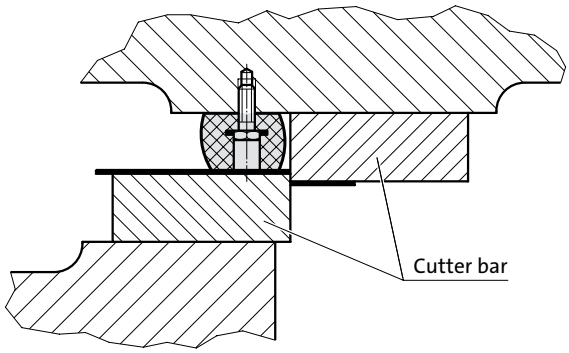


## 2532.2.190.270.0306

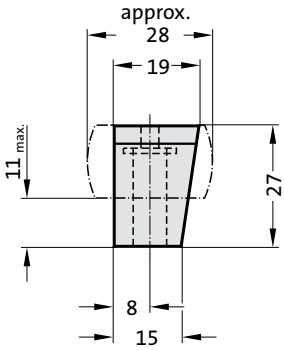


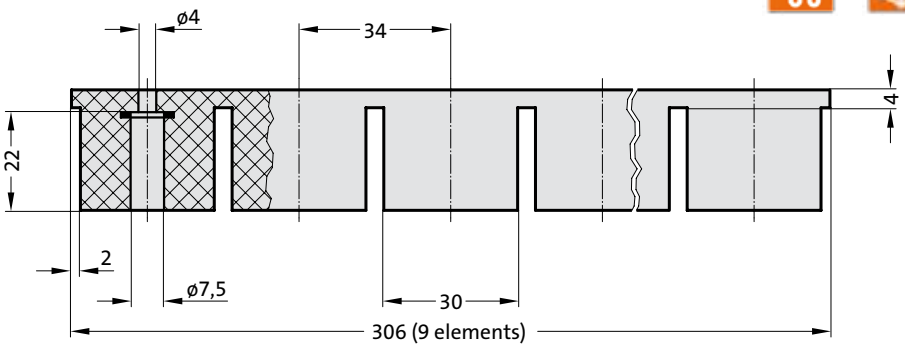


## 2532.2.190.165.0270

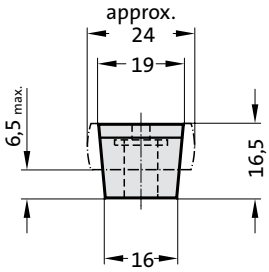


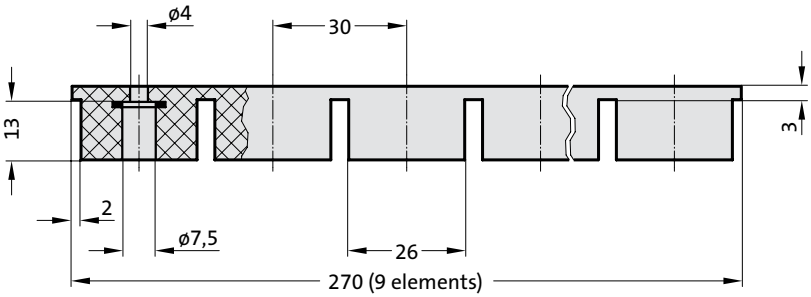


## 2532.2.150.115.0270

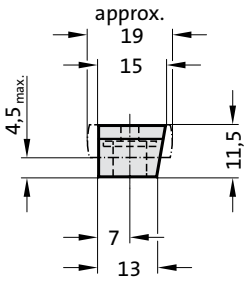


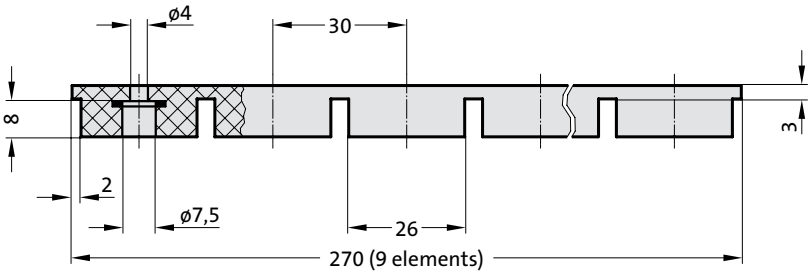

# SPRING PLUNGERS

# SPRING PLUNGER, STANDARD SPRING FORCE, VDI 3004, COLOUR MARKING: YELLOW

**Mounting example**

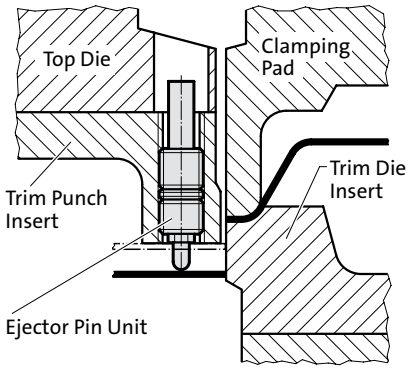


2470.10. .1

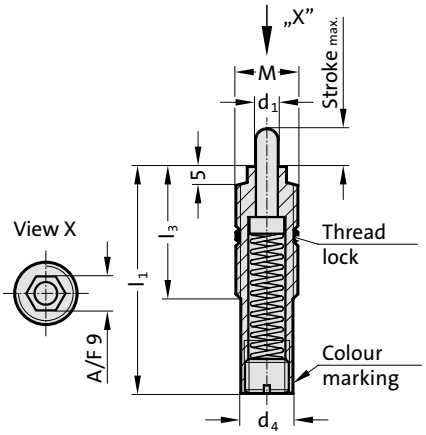


**Description:**
Spring plungers are used as ejectors, damper pins, fixing and retaining pins in many sectors of the tool-, jig- and fixture-making industries. Assembly requires the use of special FIBRO insertion tool (2470.10.11). The spring-loaded pins are hardened.

**2470.10. .1 Spring plunger, standard spring force, VDI 3004, Colour marking: yellow**

| Order No | $d_1$ | $d_4$ | M | $l_1$ | $l_3$ | Stroke max. | Spring rate [N/mm] | Spring force [N] initial | Spring force [N] final |
|---|---|---|---|---|---|---|---|---|---|
| 2470.10.010.060.1 | 6 | 13.4 | 16x2 | 60 | 35 | 10 | 0.95 | 3.8 | 13.3 |
| 2470.10.010.016.060.1 | 6 | 13.4 | 16x1.5 | 60 | 35 | 10 | 0.95 | 3.8 | 13.3 |
| 2470.10.015.060.1 | 6 | 13.4 | 16x2 | 60 | 35 | 15 | 2 | 10 | 40 |
| 2470.10.015.016.060.1 | 6 | 13.4 | 16x1.5 | 60 | 35 | 15 | 2 | 10 | 40 |
| 2470.10.020.080.1 | 6 | 13.4 | 16x2 | 80 | 35 | 20 | 1.38 | 6.9 | 34.5 |
| 2470.10.020.016.080.1 | 6 | 13.4 | 16x1.5 | 80 | 35 | 20 | 1.38 | 6.9 | 34.5 |
| 2470.10.030.080.1 | 6 | 13.4 | 16x2 | 80 | 35 | 30 | 1.3 | 6.5 | 45.5 |
| 2470.10.030.016.080.1 | 6 | 13.4 | 16x1.5 | 80 | 35 | 30 | 1.3 | 6.5 | 45.5 |
| 2470.10.030.120.1 | 6 | 13.4 | 16x2 | 120 | 35 | 30 | 0.73 | 18 | 40 |
| 2470.10.030.016.120.1 | 6 | 13.4 | 16x1.5 | 120 | 35 | 30 | 0.73 | 18 | 40 |
| 2470.10.040.150.1 | 6 | 13.4 | 16x2 | 150 | 35 | 40 | 0.6 | 13.2 | 37.2 |
| 2470.10.040.016.150.1 | 6 | 13.4 | 16x1.5 | 150 | 35 | 40 | 0.6 | 13.2 | 37.2 |
| 2470.10.050.150.1 | 6 | 13.4 | 16x2 | 150 | 35 | 50 | 0.6 | 13.2 | 43.2 |
| 2470.10.050.016.150.1 | 6 | 13.4 | 16x1.5 | 150 | 35 | 50 | 0.6 | 13.2 | 43.2 |
| 2470.10.060.150.1 | 6 | 13.4 | 16x2 | 150 | 35 | 60 | 0.6 | 13.2 | 49.2 |
| 2470.10.060.016.150.1 | 6 | 13.4 | 16x1.5 | 150 | 35 | 60 | 0.6 | 13.2 | 49.2 |
| 2470.10.070.200.1 | 6 | 13.4 | 16x2 | 200 | 35 | 70 | 0.44 | 9.68 | 40.5 |
| 2470.10.070.016.200.1 | 6 | 13.4 | 16x1.5 | 200 | 35 | 70 | 0.44 | 9.68 | 40.5 |
| 2470.10.080.200.1 | 6 | 13.4 | 16x2 | 200 | 35 | 80 | 0.44 | 9.68 | 44.8 |
| 2470.10.080.016.200.1 | 6 | 13.4 | 16x1.5 | 200 | 35 | 80 | 0.44 | 9.68 | 44.8 |

# SPRING PLUNGER, LOW MAINTENANCE, STANDARD SPRING FORCE, VDI 3004, COLOUR MARKING: YELLOW

2470.20. .1

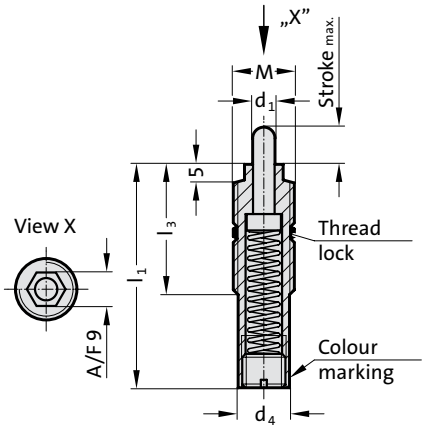


**Mounting example**

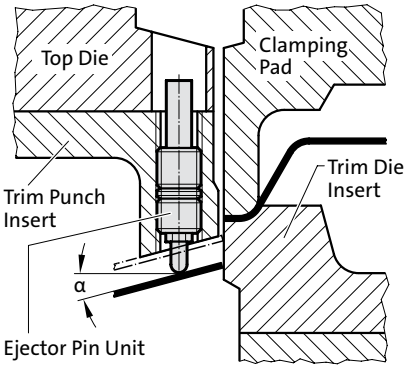

**Description:**

Resilient thrust pieces are used as knock out pins, damper pins, fixing and ejector pins in many sectors of the tool, jig and fixture manufacturing industries. Assembly requires the use of special FIBRO insertion tool (2470.10.11).

**The spring pin made from high performance plastic with additives permits lateral loading of max. 15° depending on the stroke length.**

**Note:**

Working temperature: 0 °C to +80 °C

Max. recommended extensions per minute: approx. 120 (at 20 °C)

Max. piston speed: 1.6 m/s

**2470.20. .1 Spring plunger, low maintenance, standard spring force, VDI 3004, Colour marking: yellow**

| Order No | $d_1$ | $d_4$ | M | $l_1$ | $l_3$ | Stroke max. | Spring rate [N/mm] | Spring force [N] initial | Spring force [N] final | α |
|---|---|---|---|---|---|---|---|---|---|---|
| 2470.20.010.060.1 | 6 | 13.4 | 16x2 | 60 | 35 | 10 | 0.95 | 3.8 | 13.3 | 15 |
| 2470.20.010.016.060.1 | 6 | 13.4 | 16x1.5 | 60 | 35 | 10 | 0.95 | 3.8 | 13.3 | 15 |
| 2470.20.015.060.1 | 6 | 13.4 | 16x2 | 60 | 35 | 15 | 2 | 10 | 40 | 15 |
| 2470.20.015.016.060.1 | 6 | 13.4 | 16x1.5 | 60 | 35 | 15 | 2 | 10 | 40 | 15 |
| 2470.20.020.080.1 | 6 | 13.4 | 16x2 | 80 | 35 | 20 | 1.38 | 6.9 | 34.5 | 15 |
| 2470.20.020.016.080.1 | 6 | 13.4 | 16x1.5 | 80 | 35 | 20 | 1.38 | 6.9 | 34.5 | 15 |
| 2470.20.030.080.1 | 6 | 13.4 | 16x2 | 80 | 35 | 30 | 1.3 | 6.5 | 45.5 | 15 |
| 2470.20.030.016.080.1 | 6 | 13.4 | 16x1.5 | 80 | 35 | 30 | 1.3 | 6.5 | 45.5 | 15 |
| 2470.20.030.120.1 | 6 | 13.4 | 16x2 | 120 | 35 | 30 | 0.73 | 18 | 40 | 15 |
| 2470.20.030.016.120.1 | 6 | 13.4 | 16x1.5 | 120 | 35 | 30 | 0.73 | 18 | 40 | 15 |
| 2470.20.040.150.1 | 6 | 13.4 | 16x2 | 150 | 35 | 40 | 0.6 | 13.2 | 37.2 | 10 |
| 2470.20.040.016.150.1 | 6 | 13.4 | 16x1.5 | 150 | 35 | 40 | 0.6 | 13.2 | 37.2 | 10 |
| 2470.20.050.150.1 | 6 | 13.4 | 16x2 | 150 | 35 | 50 | 0.6 | 13.2 | 43.2 | 8 |
| 2470.20.050.016.150.1 | 6 | 13.4 | 16x1.5 | 150 | 35 | 50 | 0.6 | 13.2 | 43.2 | 8 |

# SPRING PLUNGER, MEDIUM SPRING FORCE, VDI 3004, COLOUR MARKING: WHITE

**Mounting example**

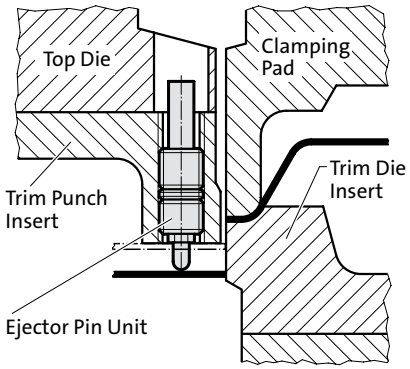


2470.10. .3

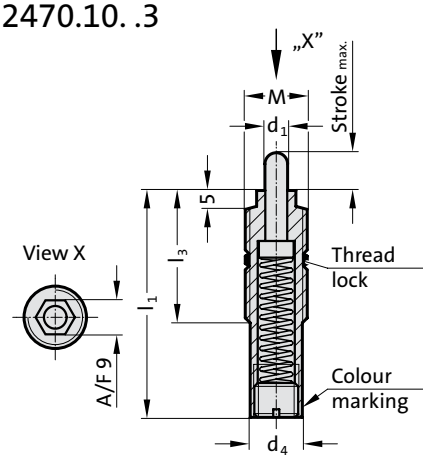


**Description:**
Spring plungers are used as ejectors, damper pins, fixing and retaining pins in many sectors of the tool-, jig- and fixture-making industries. Assembly requires the use of special FIBRO insertion tool (2470.10.11). The spring-loaded pins are hardened.

**2470.10. .3 Spring plunger, medium spring force, VDI 3004, Colour marking: white**

| Order No | $d_1$ | $d_4$ | M | $l_1$ | $l_3$ | Stroke max. | Spring rate [N/mm] | Spring force [N] initial | Spring force [N] final |
|---|---|---|---|---|---|---|---|---|---|
| 2470.10.020.080.3 | 6 | 13.4 | 16x2 | 80 | 35 | 20 | 3.02 | 15.1 | 75.6 |
| 2470.10.020.016.080.3 | 6 | 13.4 | 16x1.5 | 80 | 35 | 20 | 3.02 | 15.1 | 75.6 |

# SPRING PLUNGER, LOW MAINTENANCE, MEDIUM SPRING FORCE, VDI 3004, COLOUR MARKING: WHITE

2470.20. .3

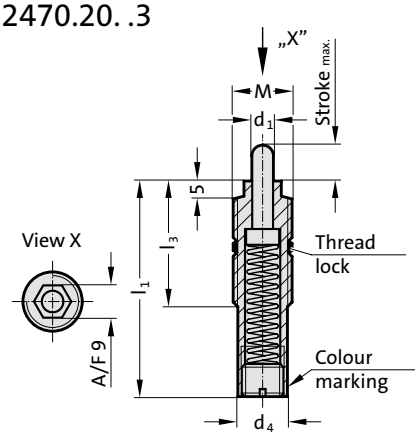


**Mounting example**

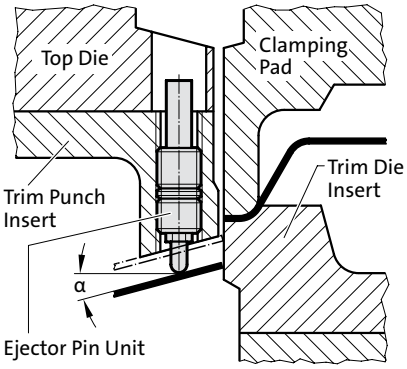

**Description:**
Resilient thrust pieces are used as knock out pins, damper pins, fixing and ejector pins in many sectors of the tool, jig and fixture manufacturing industries. Assembly requires the use of special FIBRO insertion tool (2470.10.11).
**The spring pin made from high performance plastic with additives permits lateral loading of max. 15° depending on the stroke length.**

**Note:**
Working temperature: 0 °C to +80 °C
Max. recommended extensions per minute: approx. 120 (at 20 °C)
Max. piston speed: 1.6 m/s

**2470.20. .3 Spring plunger, low maintenance, medium spring force, VDI 3004, Colour marking: white**

| Order No | $d_1$ | $d_4$ | M | $l_1$ | $l_3$ | Stroke max. | Spring rate [N/mm] | Spring force [N] initial | Spring force [N] final | α |
|---|---|---|---|---|---|---|---|---|---|---|
| 2470.20.020.080.3 | 6 | 13.4 | 16x2 | 80 | 35 | 20 | 3.02 | 15.1 | 75.6 | 15 |
| 2470.20.020.016.080.3 | 6 | 13.4 | 16x1.5 | 80 | 35 | 20 | 3.02 | 15.1 | 75.6 | 15 |

# SPRING PLUNGER, INCREASED SPRING FORCE, VDI 3004, COLOUR MARKING: RED

**Mounting example**

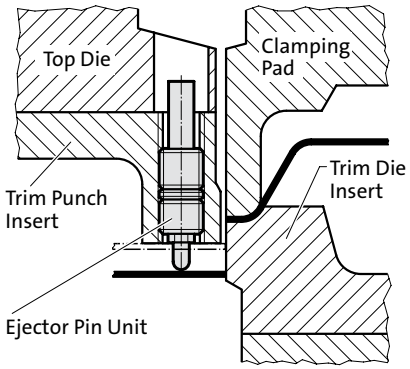


2470.10. .2

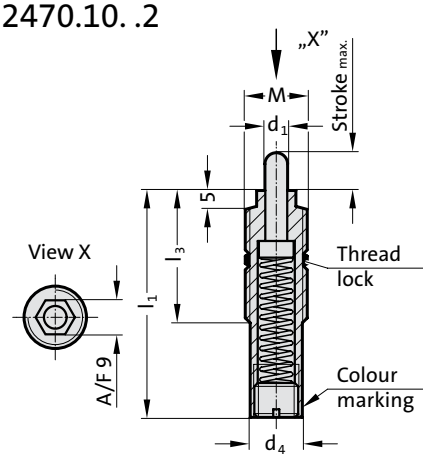


**Description:**
Spring plungers are used as ejectors, damper pins, fixing and retaining pins in many sectors of the tool-, jig- and fixture-making industries. Assembly requires the use of special FIBRO insertion tool (2470.10.11). The spring-loaded pins are hardened.

**2470.10. .2 Spring plunger, increased spring force, VDI 3004, Colour marking: red**

| Order No | $d_1$ | $d_4$ | M | $l_1$ | $l_3$ | Stroke max. | Spring rate [N/mm] | Spring force [N] initial | Spring force [N] final |
|---|---|---|---|---|---|---|---|---|---|
| 2470.10.010.060.2 | 6 | 13.4 | 16x2 | 60 | 35 | 10 | 3.25 | 13 | 45.5 |
| 2470.10.010.016.060.2 | 6 | 13.4 | 16x1.5 | 60 | 35 | 10 | 3.25 | 13 | 45.5 |
| 2470.10.015.060.2 | 6 | 13.4 | 16x2 | 60 | 35 | 15 | 2.6 | 15 | 56 |
| 2470.10.015.016.060.2 | 6 | 13.4 | 16x1.5 | 60 | 35 | 15 | 2.6 | 15 | 56 |
| 2470.10.020.080.2 | 6 | 13.4 | 16x2 | 80 | 35 | 20 | 6.9 | 34.5 | 172.5 |
| 2470.10.020.016.080.2 | 6 | 13.4 | 16x1.5 | 80 | 35 | 20 | 6.9 | 34.5 | 172.5 |
| 2470.10.030.120.2 | 6 | 13.4 | 16x2 | 120 | 35 | 30 | 2 | 20 | 80 |
| 2470.10.030.016.120.2 | 6 | 13.4 | 16x1.5 | 120 | 35 | 30 | 2 | 20 | 80 |
| 2470.10.030.150.2 | 6 | 13.4 | 16x2 | 150 | 35 | 30 | 2.55 | 56.1 | 132.6 |
| 2470.10.030.016.150.2 | 6 | 13.4 | 16x1.5 | 150 | 35 | 30 | 2.55 | 56.1 | 132.6 |
| 2470.10.040.150.2 | 6 | 13.4 | 16x2 | 150 | 35 | 40 | 2.55 | 56.1 | 158.1 |
| 2470.10.040.016.150.2 | 6 | 13.4 | 16x1.5 | 150 | 35 | 40 | 2.55 | 56.1 | 158.1 |
| 2470.10.050.200.2 | 6 | 13.4 | 16x2 | 200 | 35 | 50 | 1.61 | 19.3 | 99.9 |
| 2470.10.050.016.200.2 | 6 | 13.4 | 16x1.5 | 200 | 35 | 50 | 1.61 | 19.3 | 99.9 |
| 2470.10.060.200.2 | 6 | 13.4 | 16x2 | 200 | 35 | 60 | 1.61 | 19.3 | 116.1 |
| 2470.10.060.016.200.2 | 6 | 13.4 | 16x1.5 | 200 | 35 | 60 | 1.61 | 19.3 | 116.1 |
| 2470.10.070.200.2 | 6 | 13.4 | 16x2 | 200 | 35 | 70 | 1.61 | 19.3 | 132.1 |
| 2470.10.070.016.200.2 | 6 | 13.4 | 16x1.5 | 200 | 35 | 70 | 1.61 | 19.3 | 132.1 |
| 2470.10.080.200.2 | 6 | 13.4 | 16x2 | 200 | 35 | 80 | 0.94 | 25 | 100.1 |
| 2470.10.080.016.200.2 | 6 | 13.4 | 16x1.5 | 200 | 35 | 80 | 0.94 | 25 | 100.1 |

# SPRING PLUNGER, LOW MAINTENANCE, INCREASED SPRING FORCE, VDI 3004, COLOUR MARKING: RED

2470.20. .2

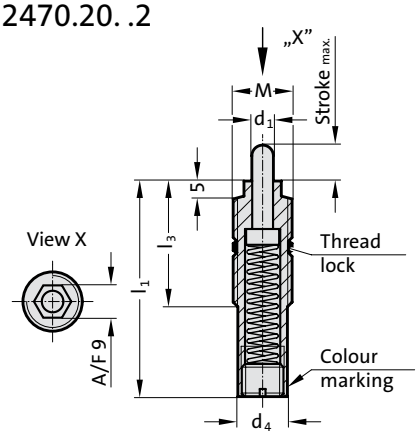


**Mounting example**

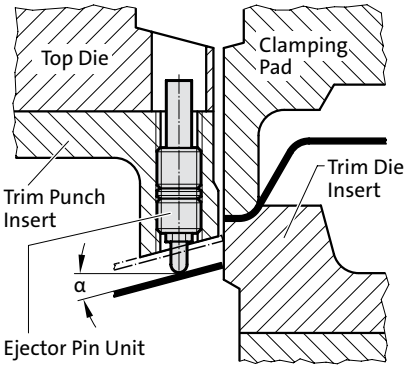

**Description:**

Resilient thrust pieces are used as knock out pins, damper pins, fixing and ejector pins in many sectors of the tool, jig and fixture manufacturing industries. Assembly requires the use of special FIBRO insertion tool (2470.10.11).

**The spring pin made from high performance plastic with additives permits lateral loading of max. 15° depending on the stroke length.**

**Note:**

Working temperature: 0 °C to +80 °C

Max. recommended extensions per minute: approx. 120 (at 20 °C)

Max. piston speed: 1.6 m/s

**2470.20. .2 Spring plunger, low maintenance, increased spring force, VDI 3004, Colour marking: red**

| Order No | $d_1$ | $d_4$ | M | $l_1$ | $l_3$ | Stroke max. | Spring rate [N/mm] | Spring force [N] initial | Spring force [N] final | α |
|---|---|---|---|---|---|---|---|---|---|---|
| 2470.20.010.060.2 | 6 | 13.4 | 16x2 | 60 | 35 | 10 | 3.25 | 13 | 45.5 | 15 |
| 2470.20.010.016.060.2 | 6 | 13.4 | 16x1.5 | 60 | 35 | 10 | 3.25 | 13 | 45.5 | 15 |
| 2470.20.015.060.2 | 6 | 13.4 | 16x2 | 60 | 35 | 15 | 2.6 | 15 | 56 | 15 |
| 2470.20.015.016.060.2 | 6 | 13.4 | 16x1.5 | 60 | 35 | 15 | 2.6 | 15 | 56 | 15 |
| 2470.20.020.080.2 | 6 | 13.4 | 16x2 | 80 | 35 | 20 | 6.9 | 34.5 | 172.5 | 15 |
| 2470.20.020.016.080.2 | 6 | 13.4 | 16x1.5 | 80 | 35 | 20 | 6.9 | 34.5 | 172.5 | 15 |
| 2470.20.030.120.2 | 6 | 13.4 | 16x2 | 120 | 35 | 30 | 2 | 20 | 80 | 15 |
| 2470.20.030.016.120.2 | 6 | 13.4 | 16x1.5 | 120 | 35 | 30 | 2 | 20 | 80 | 15 |
| 2470.20.030.150.2 | 6 | 13.4 | 16x2 | 150 | 35 | 30 | 2.55 | 56.1 | 132.6 | 15 |
| 2470.20.030.016.150.2 | 6 | 13.4 | 16x1.5 | 150 | 35 | 30 | 2.55 | 56.1 | 132.6 | 15 |
| 2470.20.040.150.2 | 6 | 13.4 | 16x2 | 150 | 35 | 40 | 2.55 | 56.1 | 158.1 | 10 |
| 2470.20.040.016.150.2 | 6 | 13.4 | 16x1.5 | 150 | 35 | 40 | 2.55 | 56.1 | 158.1 | 10 |
| 2470.20.050.200.2 | 6 | 13.4 | 16x2 | 200 | 35 | 50 | 1.61 | 19.3 | 99.9 | 8 |
| 2470.20.050.016.200.2 | 6 | 13.4 | 16x1.5 | 200 | 35 | 50 | 1.61 | 19.3 | 99.9 | 8 |

# SPRING PLUNGER, WITH SPRING LOADED BALL, WITH SLOT, STANDARD SPRING FORCE

## 2471.01.

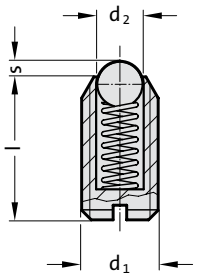


**Material:**
Sleeve: Free machining steel, burnished
Ball: Hardened ball bearing steel
Spring: Nirosta

**Note:**
For locking and for pressing upwards or downwards.
Temperature operating range: max. 250°C

**2471.01.** **Spring plunger, with spring loaded ball, with slot, standard spring force**

| Order No | $d_1$ | l | s | $d_2$ | Spring force [N] initial | Spring force [N] final |
|---|---|---|---|---|---|---|
| 2471.01.003 | M3 | 7 | 0.4 | 1.5 | 3 | 4.5 |
| 2471.01.004 | M4 | 9 | 0.8 | 2.5 | 8.5 | 14 |
| 2471.01.005 | M5 | 12 | 0.9 | 3 | 8 | 14 |
| 2471.01.006 | M6 | 14 | 1 | 3.5 | 11 | 18 |
| 2471.01.008 | M8 | 16 | 1.5 | 4.5 | 18 | 31 |
| 2471.01.010 | M10 | 19 | 2 | 6 | 24 | 45 |
| 2471.01.012 | M12 | 22 | 2.5 | 8 | 26 | 49 |
| 2471.01.016 | M16 | 24 | 3.5 | 10 | 41 | 86 |
| 2471.01.020 | M20 | 30 | 4.5 | 12 | 56 | 111 |
| 2471.01.024 | M24 | 34 | 5.5 | 15 | 81 | 151 |

## 2471.31.

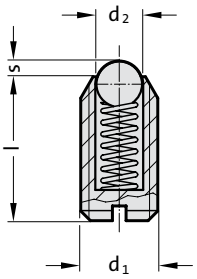


**Material:**
Sleeve: Nirosta 1.4305
Ball: Nirosta hardened
Spring: Nirosta

**Note:**
For locking and for pressing upwards or downwards.
Temperature operating range: max. 250°C

**2471.31.** **Spring plunger, with spring loaded ball, with slot, standard spring force**

| Order No | $d_1$ | l | s | $d_2$ | Spring force [N] initial | Spring force [N] final |
|---|---|---|---|---|---|---|
| 2471.31.003 | M3 | 7 | 0.4 | 1.5 | 3 | 4.5 |
| 2471.31.004 | M4 | 9 | 0.8 | 2.5 | 8.5 | 14 |
| 2471.31.005 | M5 | 12 | 0.9 | 3 | 8 | 14 |
| 2471.31.006 | M6 | 14 | 1 | 3.5 | 11 | 18 |
| 2471.31.008 | M8 | 16 | 1.5 | 4.5 | 18 | 31 |
| 2471.31.010 | M10 | 19 | 2 | 6 | 24 | 45 |
| 2471.31.012 | M12 | 22 | 2.5 | 8 | 26 | 49 |
| 2471.31.016 | M16 | 24 | 3.5 | 10 | 41 | 86 |
| 2471.31.020 | M20 | 30 | 4.5 | 12 | 56 | 111 |
| 2471.31.024 | M24 | 34 | 5.5 | 15 | 81 | 151 |

# SPRING PLUNGER, WITH SPRING LOADED BALL, WITH SLOT, INCREASED SPRING FORCE

## 2471.02.

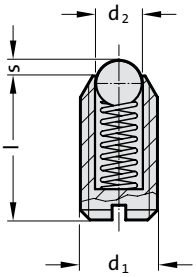

**2471.02.** **Spring plunger, with spring loaded ball, with slot, increased spring force**

| Order No | $d_1$ | l | s | $d_2$ | Spring force [N] initial | Spring force [N] final |
|---|---|---|---|---|---|---|
| 2471.02.005 | M5 | 12 | 0.9 | 3 | 15 | 22 |
| 2471.02.006 | M6 | 14 | 1 | 3.5 | 19 | 28 |
| 2471.02.008 | M8 | 16 | 1.5 | 4.5 | 36 | 62 |
| 2471.02.010 | M10 | 19 | 2 | 6 | 57 | 104 |
| 2471.02.012 | M12 | 22 | 2.5 | 8 | 61 | 110 |
| 2471.02.016 | M16 | 24 | 3.5 | 10 | 68 | 142 |
| 2471.02.020 | M20 | 30 | 4.5 | 12 | 84 | 166 |
| 2471.02.024 | M24 | 34 | 5.5 | 15 | 127 | 237 |

**Material:**
Sleeve: Free machining steel, burnished
Ball: Hardened ball bearing steel
Spring: Nirosta

**Note:**
For locking and for pressing upwards or downwards.
Temperature operating range: max. 250°C
Identification of increased spring force by two longitudinal marks on the sleeve.

## 2471.32.

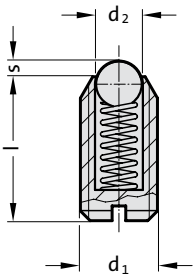

**2471.32.** **Spring plunger, with spring loaded ball, with slot, increased spring force**

| Order No | $d_1$ | l | s | $d_2$ | Spring force [N] initial | Spring force [N] final |
|---|---|---|---|---|---|---|
| 2471.32.005 | M5 | 12 | 0.9 | 3 | 15 | 22 |
| 2471.32.006 | M6 | 14 | 1 | 3.5 | 19 | 28 |
| 2471.32.008 | M8 | 16 | 1.5 | 4.5 | 36 | 62 |
| 2471.32.010 | M10 | 19 | 2 | 6 | 57 | 104 |
| 2471.32.012 | M12 | 22 | 2.5 | 8 | 61 | 110 |
| 2471.32.016 | M16 | 24 | 3.5 | 10 | 68 | 142 |
| 2471.32.020 | M20 | 30 | 4.5 | 12 | 84 | 166 |
| 2471.32.024 | M24 | 34 | 5.5 | 15 | 127 | 237 |

**Material:**
Sleeve: Nirosta 1.4305
Ball: Nirosta hardened
Spring: Nirosta

**Note:**
For locking and for pressing upwards or downwards.
Temperature operating range: max. 250°C
Identification of increased spring force by two longitudinal marks on the sleeve.

# SPRING PLUNGER, WITH SPRING LOADED BALL, WITH HEXAGON SOCKET, STANDARD SPRING FORCE

## 2471.03.

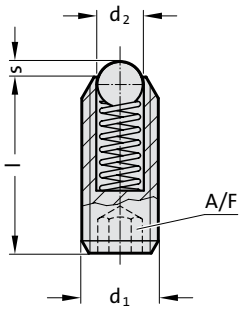


**Material:**
Sleeve: Free machining steel, burnished
Ball: Hardened ball bearing steel
Spring: Nirosta

**Note:**
For locking and for pressing upwards or downwards.
Temperature operating range: max. 250°C

**2471.03.** **Spring plunger, with spring loaded ball, with hexagon socket, standard spring force**

| Order No | $d_1$ | $d_2$ | SW | l | s | Spring force [N] initial | Spring force [N] final |
|---|---|---|---|---|---|---|---|
| 2471.03.003 | M3 | 1.5 | 1.5 | 8 | 0.4 | 3 | 4.5 |
| 2471.03.004 | M4 | 2.5 | 2 | 12 | 0.8 | 8.5 | 14 |
| 2471.03.005 | M5 | 3 | 2.5 | 14 | 0.9 | 8 | 14 |
| 2471.03.006 | M6 | 3.5 | 3 | 15 | 1 | 11 | 18 |
| 2471.03.008 | M8 | 4.5 | 4 | 18 | 1.5 | 18 | 31 |
| 2471.03.010 | M10 | 6 | 5 | 23 | 2 | 24 | 45 |
| 2471.03.012 | M12 | 8 | 6 | 26 | 2.5 | 26 | 49 |
| 2471.03.016 | M16 | 10 | 8 | 33 | 3.5 | 41 | 86 |
| 2471.03.020 | M20 | 12 | 10 | 43 | 4.5 | 56 | 111 |
| 2471.03.024 | M24 | 15 | 12 | 48 | 5.5 | 81 | 151 |

## 2471.33.

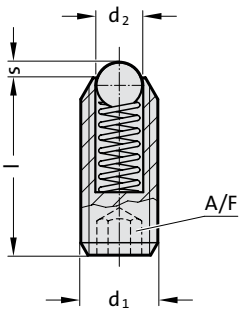


**Material:**
Sleeve: Nirosta 1.4305
Ball: Nirosta hardened
Spring: Nirosta

**Note:**
For locking and for pressing upwards or downwards.
Temperature operating range: max. 250°C

**2471.33.** **Spring plunger, with spring loaded ball, with hexagon socket, standard spring force**

| Order No | $d_1$ | $d_2$ | SW | l | s | Spring force [N] initial | Spring force [N] final |
|---|---|---|---|---|---|---|---|
| 2471.03.003 | M3 | 1.5 | 1.5 | 8 | 0.4 | 3 | 4.5 |
| 2471.03.004 | M4 | 2.5 | 2 | 12 | 0.8 | 8.5 | 14 |
| 2471.03.005 | M5 | 3 | 2.5 | 14 | 0.9 | 8 | 14 |
| 2471.03.006 | M6 | 3.5 | 3 | 15 | 1 | 11 | 18 |
| 2471.03.008 | M8 | 4.5 | 4 | 18 | 1.5 | 18 | 31 |
| 2471.03.010 | M10 | 6 | 5 | 23 | 2 | 24 | 45 |
| 2471.03.012 | M12 | 8 | 6 | 26 | 2.5 | 26 | 49 |
| 2471.03.016 | M16 | 10 | 8 | 33 | 3.5 | 41 | 86 |
| 2471.03.020 | M20 | 12 | 10 | 43 | 4.5 | 56 | 111 |
| 2471.03.024 | M24 | 15 | 12 | 48 | 5.5 | 81 | 151 |

# SPRING PLUNGER, WITH SPRING LOADED BALL, WITH HEXAGON SOCKET, INCREASED SPRING FORCE

## 2471.04.

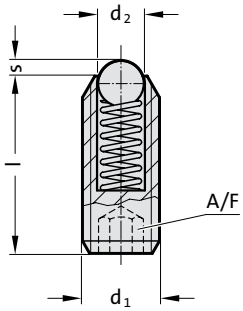

**2471.04.** **Spring plunger, with spring loaded ball, with hexagon socket, increased spring force**

| Order No | $d_1$ | $d_2$ | SW | l | s | Spring force [N] initial | Spring force [N] final |
|---|---|---|---|---|---|---|---|
| 2471.04.005 | M5 | 3 | 2.5 | 14 | 0.9 | 15 | 22 |
| 2471.04.006 | M6 | 3.5 | 3 | 15 | 1 | 19 | 28 |
| 2471.04.008 | M8 | 4.5 | 4 | 18 | 1.5 | 36 | 62 |
| 2471.04.010 | M10 | 6 | 5 | 23 | 2 | 57 | 104 |
| 2471.04.012 | M12 | 8 | 6 | 26 | 2.5 | 61 | 110 |
| 2471.04.016 | M16 | 10 | 8 | 33 | 3.5 | 68 | 142 |
| 2471.04.020 | M20 | 12 | 10 | 43 | 4.5 | 84 | 166 |
| 2471.04.024 | M24 | 15 | 12 | 48 | 5.5 | 127 | 237 |

**Material:**
Sleeve: Free machining steel, burnished
Ball: Hardened ball bearing steel
Spring: Nirosta

**Note:**
For locking and for pressing upwards or downwards.
Temperature operating range: max. 250°C
Identification of increased spring force by two longitudinal marks on the sleeve.

## 2471.34.

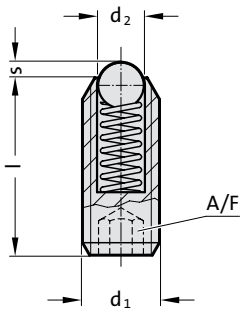

**2471.34.** **Spring plunger, with spring loaded ball, with hexagon socket, increased spring force**

| Order No | $d_1$ | $d_2$ | SW | l | s | Spring force [N] initial | Spring force [N] final |
|---|---|---|---|---|---|---|---|
| 2471.04.005 | M5 | 3 | 2.5 | 14 | 0.9 | 15 | 22 |
| 2471.04.006 | M6 | 3.5 | 3 | 15 | 1 | 19 | 28 |
| 2471.04.008 | M8 | 4.5 | 4 | 18 | 1.5 | 36 | 62 |
| 2471.04.010 | M10 | 6 | 5 | 23 | 2 | 57 | 104 |
| 2471.04.012 | M12 | 8 | 6 | 26 | 2.5 | 61 | 110 |
| 2471.04.016 | M16 | 10 | 8 | 33 | 3.5 | 68 | 142 |
| 2471.04.020 | M20 | 12 | 10 | 43 | 4.5 | 84 | 166 |
| 2471.04.024 | M24 | 15 | 12 | 48 | 5.5 | 127 | 237 |

**Material:**
Sleeve: Nirosta 1.4305
Ball: Nirosta hardened
Spring: Nirosta

**Note:**
For locking and for pressing upwards or downwards.
Temperature operating range: max. 250°C
Identification of increased spring force by two longitudinal marks on the sleeve.

# SPRING PLUNGER, WITH SPRING LOADED BALL, WITH SLOT, STANDARD SPRING FORCE

2471.05.

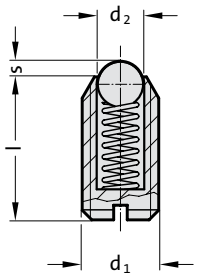


**Material:**
Sleeve: Delrin blue (POM)
Ball: Delrin white (POM)
Spring: Nirosta

**Note:**
For locking and for pressing upwards or downwards.
Temperature operating range: –30°C up to 50°C

**2471.05.** **Spring plunger, with spring loaded ball, with slot, standard spring force**

| Order No | $d_1$ | l | s | $d_2$ | Spring force [N] initial | Spring force [N] final |
|---|---|---|---|---|---|---|
| 2471.05.006 | M6 | 14 | 0.9 | 3.5 | 12 | 17 |
| 2471.05.008 | M8 | 16 | 1.5 | 5 | 20 | 35 |
| 2471.05.010 | M10 | 19 | 1.9 | 6 | 25 | 45 |

2471.35.

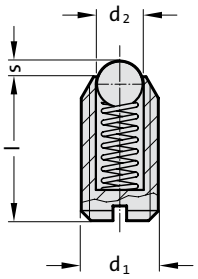


**Material:**
Sleeve: Delrin blue (POM)
Ball: Nirosta hardened (POM)
Spring: Nirosta

**Note:**
For locking and for pressing upwards or downwards.
Temperature operating range: –30°C up to 50°C

**2471.35.** **Spring plunger, with spring loaded ball, with slot, standard spring force**

| Order No | $d_1$ | l | s | $d_2$ | Spring force [N] initial | Spring force [N] final |
|---|---|---|---|---|---|---|
| 2471.35.006 | M6 | 14 | 0.9 | 3.5 | 12 | 17 |
| 2471.35.008 | M8 | 16 | 1.5 | 5 | 20 | 35 |
| 2471.35.010 | M10 | 19 | 1.9 | 6 | 25 | 45 |

# SPRING PLUNGER, WITH SPRING LOADED PIN, WITH SLOT, STANDARD SPRING FORCE

## 2472.01.

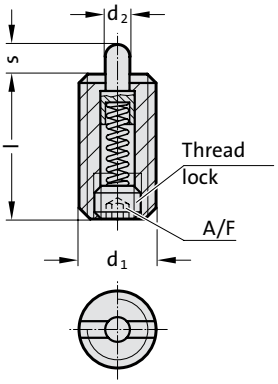

**2472.01.** **Spring plunger, with spring loaded pin, with slot, standard spring force**

| Order No | $d_1$ | $d_2$ | l | s | SW | Spring force [N] initial | Spring force [N] final |
|---|---|---|---|---|---|---|---|
| 2472.01.003 | M3 | 1 | 12 | 1 | 0.7 | 2 | 4 |
| 2472.01.004 | M4 | 1.5 | 15 | 1.5 | 1.3 | 4.5 | 16 |
| 2472.01.005 | M5 | 2.4 | 18 | 2.3 | 1.5 | 6 | 19 |
| 2472.01.006 | M6 | 2.7 | 20 | 2.5 | 2 | 6 | 19 |
| 2472.01.008 | M8 | 3.5 | 22 | 3 | 2.5 | 10 | 39 |
| 2472.01.010 | M10 | 4 | 22 | 3 | 3 | 10 | 39 |
| 2472.01.012 | M12 | 6 | 28 | 4 | 4 | 12 | 53 |
| 2472.01.016 | M16 | 7.5 | 32 | 5 | 5 | 45 | 100 |
| 2472.01.020 | M20 | 10 | 40 | 7 | 6 | 52 | 125 |
| 2472.01.024 | M24 | 12 | 52 | 10 | 8 | 70 | 170 |

**Material:**
Sleeve: Free machining steel, burnished
Pin: Free machining steel hardened, burnished
Spring: Nirosta

**Note:**
For locking and for pressing upwards or downwards. Removable with hexagon socket screw key or slotted screwdriver.

## 2472.31.

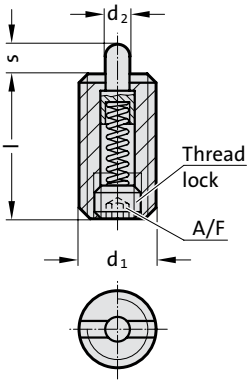

**2472.31.** **Spring plunger, with spring loaded pin, with slot, standard spring force**

| Order No | $d_1$ | $d_2$ | l | s | SW | Spring force [N] initial | Spring force [N] final |
|---|---|---|---|---|---|---|---|
| 2472.31.004 | M4 | 1.5 | 15 | 1.5 | 1.3 | 4.5 | 16 |
| 2472.31.005 | M5 | 2.4 | 18 | 2.3 | 1.5 | 6 | 19 |
| 2472.31.006 | M6 | 2.7 | 20 | 2.5 | 2 | 6 | 19 |
| 2472.31.008 | M8 | 3.5 | 22 | 3 | 2.5 | 10 | 39 |
| 2472.31.010 | M10 | 4 | 22 | 3 | 3 | 10 | 39 |
| 2472.31.012 | M12 | 6 | 28 | 4 | 4 | 12 | 53 |
| 2472.31.016 | M16 | 7.5 | 32 | 5 | 5 | 45 | 100 |
| 2472.31.020 | M20 | 10 | 40 | 7 | 6 | 52 | 125 |

**Material:**
Sleeve: Inox 1.4305
Pin: Inox 1.4305
Spring: Nirosta

**Note:**
For locking and for pressing upwards or downwards. Removable with hexagon socket screw key or slotted screwdriver.

# SPRING PLUNGER, WITH SPRING LOADED PIN, WITH SLOT, STANDARD SPRING FORCE

2472.21.

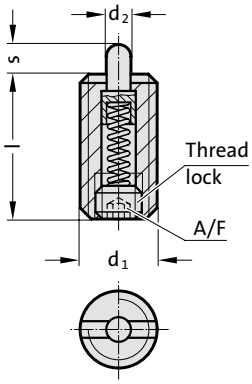


**Material:**
Sleeve: Delrin blue (POM)
Ball: Delrin white (POM)
Spring: Nirosta

**Note:**
For locking and for pressing upwards or downwards. Removable with hexagon socket screw key or slotted screwdriver.

**2472.21.** **Spring plunger, with spring loaded pin, with slot, standard spring force**

| Order No | $d_1$ | $d_2$ | l | s | SW | Spring force [N] initial | Spring force [N] final |
|---|---|---|---|---|---|---|---|
| 2472.21.004 | M4 | 1.5 | 15 | 1.5 | 1.3 | 4.5 | 16 |
| 2472.21.005 | M5 | 2.4 | 18 | 2.3 | 1.5 | 6 | 19 |
| 2472.21.006 | M6 | 2.7 | 20 | 2.5 | 2 | 6 | 19 |
| 2472.21.008 | M8 | 3.5 | 22 | 3 | 2.5 | 10 | 39 |
| 2472.21.010 | M10 | 4 | 22 | 3 | 3 | 10 | 39 |
| 2472.21.012 | M12 | 6 | 28 | 4 | 4 | 12 | 53 |
| 2472.21.016 | M16 | 7.5 | 32 | 5 | 5 | 45 | 100 |

2472.22.

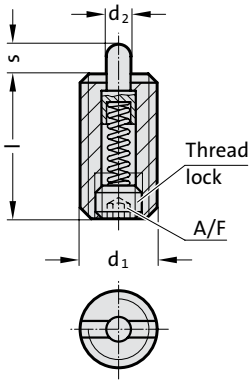


**Material:**
Sleeve: Delrin blue (POM)
Ball: Nirosta hardened (POM)
Spring: Nirosta

**Note:**
For locking and for pressing upwards or downwards. Removable with hexagon socket screw key or slotted screwdriver.

**2472.22.** **Spring plunger, with spring loaded pin, with slot, standard spring force**

| Order No | $d_1$ | $d_2$ | l | s | SW | Spring force [N] initial | Spring force [N] final |
|---|---|---|---|---|---|---|---|
| 2472.22.004 | M4 | 1.5 | 15 | 1.5 | 1.3 | 4.5 | 16 |
| 2472.22.005 | M5 | 2.4 | 18 | 2.3 | 1.5 | 6 | 19 |
| 2472.22.006 | M6 | 2.7 | 20 | 2.5 | 2 | 6 | 19 |
| 2472.22.008 | M8 | 3.5 | 22 | 3 | 2.5 | 10 | 39 |
| 2472.22.010 | M10 | 4 | 22 | 3 | 3 | 10 | 39 |
| 2472.22.012 | M12 | 6 | 28 | 4 | 4 | 12 | 53 |
| 2472.22.016 | M16 | 7.5 | 32 | 5 | 5 | 45 | 100 |

# SPRING PLUNGER, WITH SPRING LOADED PIN, WITH HEXAGON SOCKET, STANDARD SPRING FORCE

## 2472.03.

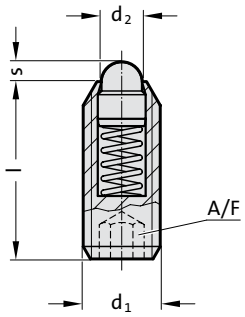

**2472.03.** **Spring plunger, with spring loaded pin, with hexagon socket, standard spring force**

| Order No | $d_1$ | $d_2$ | l | s | SW | Spring force [N] initial | Spring force [N] final |
|---|---|---|---|---|---|---|---|
| 2472.03.004 | M4 | 1.8 | 12 | 1.5 | 2 | 4.5 | 12.5 |
| 2472.03.005 | M5 | 2.4 | 14 | 2 | 2.5 | 5 | 13 |
| 2472.03.006 | M6 | 2.7 | 15 | 2 | 3 | 6 | 17 |
| 2472.03.008 | M8 | 3.8 | 18 | 2 | 4 | 16 | 33 |
| 2472.03.010 | M10 | 4.5 | 23 | 2.5 | 5 | 19 | 42 |
| 2472.03.012 | M12 | 6 | 26 | 3.5 | 6 | 22 | 57 |
| 2472.03.016 | M16 | 8.5 | 33 | 4.5 | 8 | 38 | 78 |
| 2472.03.020 | M20 | 10 | 43 | 6.5 | 10 | 39 | 81 |
| 2472.03.024 | M24 | 13 | 48 | 8 | 12 | 72 | 155 |

**Material:**
Sleeve: Free machining steel, burnished
Pin: Free machining steel hardened, burnished
Spring: Nirosta

**Note:**
For locking and for pressing upwards or downwards.
Temperature operating range: max. 250°C

## 2472.33.

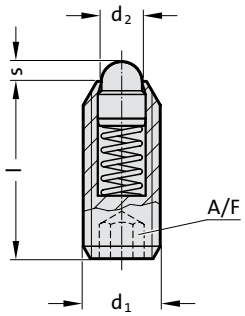

**2472.33.** **Spring plunger, with spring loaded pin, with hexagon socket, standard spring force**

| Order No | $d_1$ | $d_2$ | l | s | SW | Spring force [N] initial | Spring force [N] final |
|---|---|---|---|---|---|---|---|
| 2472.33.004 | M4 | 1.8 | 12 | 1.5 | 2 | 4.5 | 12.5 |
| 2472.33.005 | M5 | 2.4 | 14 | 2 | 2.5 | 5 | 13 |
| 2472.33.006 | M6 | 2.7 | 15 | 2 | 3 | 6 | 17 |
| 2472.33.008 | M8 | 3.8 | 18 | 2 | 4 | 16 | 33 |
| 2472.33.010 | M10 | 4.5 | 23 | 2.5 | 5 | 19 | 42 |
| 2472.33.012 | M12 | 6 | 26 | 3.5 | 6 | 22 | 57 |
| 2472.33.016 | M16 | 8.5 | 33 | 4.5 | 8 | 38 | 78 |
| 2472.33.020 | M20 | 10 | 43 | 6.5 | 10 | 39 | 81 |
| 2472.33.024 | M24 | 13 | 48 | 8 | 12 | 72 | 155 |

**Material:**
Sleeve: Inox 1.4305
Pin: Inox 1.4305
Spring: Nirosta

**Note:**
For locking and for pressing upwards or downwards.
Temperature operating range: max. 250°C

# SPRING PLUNGER, WITH SPRING LOADED PIN AND SEAL, WITH HEXAGON SOCKET, STANDARD SPRING FORCE

2472.07.

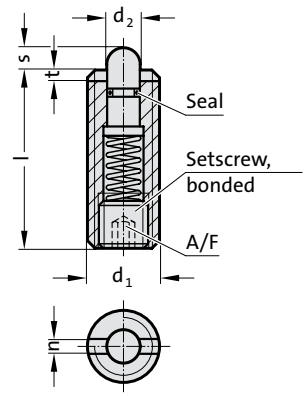


**Material:**
Sleeve: Free machining steel, burnished
Pin: Free machining steel hardened, burnished
Spring: Nirosta

**Note:**
For locking and for pressing upwards or downwards. The seal prevents the ingress of liquids into the forcing pin. Assembly and dismantling using hexagon socket key and slotted screwdriver.
Temperature operating range: –30°C up to 80°C

**2472.07.** **Spring plunger, with spring loaded pin and seal, with hexagon socket, standard spring force**

| Order No | $d_1$ | $d_2$ | l | n | s | t | SW | Spring force [N] initial | Spring force [N] final |
|---|---|---|---|---|---|---|---|---|---|
| 2472.07.008 | M8 | 3.8 | 26 | 1.5 | 3 | 1.4 | 2.5 | 9 | 24 |
| 2472.07.010 | M10 | 4 | 28 | 1.5 | 3.5 | 1.4 | 3 | 15 | 30 |
| 2472.07.012 | M12 | 6 | 35 | 2.7 | 4 | 2 | 4 | 24 | 50 |
| 2472.07.016 | M16 | 7.5 | 40 | 3.2 | 5 | 2.5 | 5 | 36 | 58 |

2472.37.

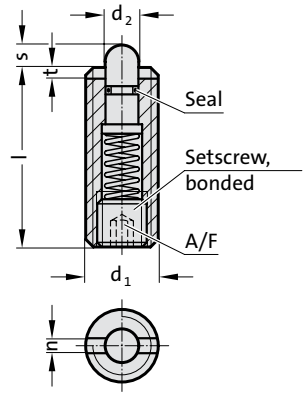


**Material:**
Sleeve: Inox 1.4305
Pin: Inox 1.4305
Spring: Nirosta

**Note:**
For locking and for pressing upwards or downwards. The seal prevents the ingress of liquids into the forcing pin. Assembly and dismantling using hexagon socket key and slotted screwdriver.
Temperature operating range: –30°C up to 80°C

**2472.37.** **Spring plunger, with spring loaded pin and seal, with hexagon socket, standard spring force**

| Order No | $d_1$ | $d_2$ | l | n | s | t | SW | Spring force [N] initial | Spring force [N] final |
|---|---|---|---|---|---|---|---|---|---|
| 2472.37.008 | M8 | 3.8 | 26 | 1.5 | 3 | 1.4 | 2.5 | 9 | 24 |
| 2472.37.010 | M10 | 4 | 28 | 1.5 | 3.5 | 1.4 | 3 | 15 | 30 |
| 2472.37.012 | M12 | 6 | 35 | 2.7 | 4 | 2 | 4 | 24 | 50 |
| 2472.37.016 | M16 | 7.5 | 40 | 3.2 | 5 | 2.5 | 5 | 36 | 58 |

# SPRING PLUNGER, WITH SPRING LOADED PIN, WITH SLOT, INCREASED SPRING FORCE

## 2472.02.

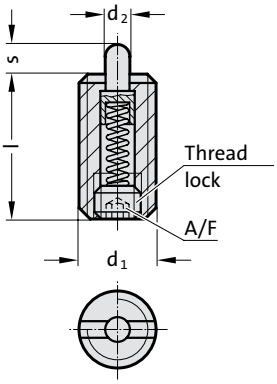

**2472.02.** **Spring plunger, with spring loaded pin, with slot, increased spring force**

| Order No | $d_1$ | $d_2$ | SW | l | s | Spring force [N] initial | Spring force [N] final |
|---|---|---|---|---|---|---|---|
| 2472.02.005 | M5 | 2.4 | 1.5 | 18 | 2.3 | 11 | 40 |
| 2472.02.006 | M6 | 2.7 | 2 | 20 | 2.5 | 15 | 43 |
| 2472.02.008 | M8 | 3.5 | 2.5 | 22 | 3 | 20 | 75 |
| 2472.02.010 | M10 | 4 | 3 | 22 | 3 | 20 | 75 |
| 2472.02.012 | M12 | 6 | 4 | 28 | 4 | 45 | 120 |
| 2472.02.016 | M16 | 7.5 | 5 | 32 | 5 | 64 | 160 |
| 2472.02.020 | M20 | 10 | 6 | 40 | 7 | 75 | 195 |
| 2472.02.024 | M24 | 12 | 8 | 52 | 10 | 75 | 245 |

**Material:**
Sleeve: Free machining steel, burnished
Pin: Free machining steel hardened, burnished
Spring: Nirosta

**Note:**
For locking and for pressing upwards or downwards. Removable with hexagon socket screw key or slotted screwdriver.
Identification of increased spring force by two longitudinal marks on the sleeve.

# SPRING PLUNGER, WITH SPRING LOADED PIN AND SEAL, WITH HEXAGON SOCKET, INCREASED SPRING FORCE

## 2472.08.

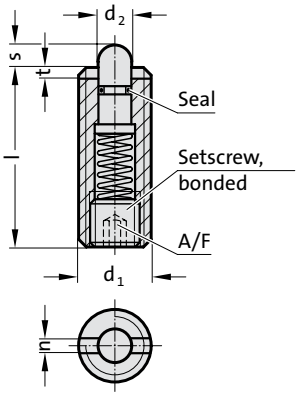

**2472.08.** **Spring plunger, with spring loaded pin and seal, with hexagon socket, increased spring force**

| Order No | $d_1$ | $d_2$ | l | n | s | t | SW | Spring force [N] initial | Spring force [N] final |
|---|---|---|---|---|---|---|---|---|---|
| 2472.08.008 | M8 | 3.8 | 26 | 1.5 | 3 | 1.4 | 2.5 | 17 | 39 |
| 2472.08.010 | M10 | 4 | 28 | 1.5 | 3.5 | 1.4 | 3 | 22 | 43 |
| 2472.08.012 | M12 | 6 | 35 | 2.7 | 4 | 2 | 4 | 40 | 80 |
| 2472.08.016 | M16 | 7.5 | 40 | 3.2 | 5 | 2.5 | 5 | 44 | 113 |

**Material:**
Sleeve: Free machining steel, burnished
Pin: Free machining steel hardened, burnished
Spring: Nirosta

**Note:**
For locking and for pressing upwards or downwards. The seal prevents the ingress of liquids into the forcing pin. Assembly and dismantling using hexagon socket key and slotted screwdriver.
Temperature operating range: –30°C up to 80°C
Identification of increased spring force by two longitudinal marks on the sleeve.

# SPRING PLUNGER, WITH SPRING LOADED PIN, WITH HEXAGON SOCKET, INCREASED SPRING FORCE

## 2472.04.

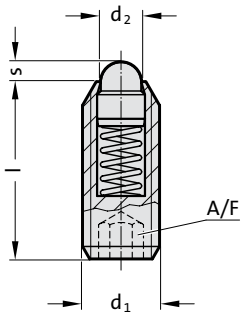


**Material:**
Sleeve: Free machining steel, burnished
Pin: Free machining steel hardened, burnished
Spring: Nirosta

**Note:**
For locking and for pressing upwards or downwards.
Temperature operating range: max. 250°C
Identification of increased spring force by two longitudinal marks on the sleeve.

**2472.04. Spring plunger, with spring loaded pin, with hexagon socket, increased spring force**

| Order No | $d_1$ | $d_2$ | l | s | SW | Spring force [N] initial | Spring force [N] final |
|---|---|---|---|---|---|---|---|
| 2472.04.006 | M6 | 2.7 | 15 | 2 | 3 | 11 | 25 |
| 2472.04.008 | M8 | 3.8 | 18 | 2 | 4 | 23 | 59 |
| 2472.04.010 | M10 | 4.5 | 23 | 2.5 | 5 | 20 | 54 |
| 2472.04.012 | M12 | 6 | 26 | 3.5 | 6 | 38 | 96 |
| 2472.04.016 | M16 | 8.5 | 33 | 4.5 | 8 | 50 | 100 |
| 2472.04.020 | M20 | 10 | 43 | 6.5 | 10 | 52 | 133 |
| 2472.04.024 | M24 | 13 | 48 | 8 | 12 | 91 | 223 |

## 2472.34.

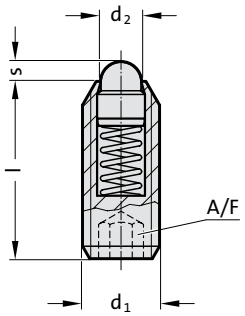


**Material:**
Sleeve: Inox 1.4305
Pin: Inox 1.4305
Spring: Nirosta

**Note:**
For locking and for pressing upwards or downwards.
Temperature operating range: max. 250°C
Identification of increased spring force by two longitudinal marks on the sleeve.

**2472.34. Spring plunger, with spring loaded pin, with hexagon socket, increased spring force**

| Order No | $d_1$ | $d_2$ | l | s | SW | Spring force [N] initial | Spring force [N] final |
|---|---|---|---|---|---|---|---|
| 2472.04.006 | M6 | 2.7 | 15 | 2 | 3 | 11 | 25 |
| 2472.04.008 | M8 | 3.8 | 18 | 2 | 4 | 23 | 59 |
| 2472.04.010 | M10 | 4.5 | 23 | 2.5 | 5 | 20 | 54 |
| 2472.04.012 | M12 | 6 | 26 | 3.5 | 6 | 38 | 96 |
| 2472.04.016 | M16 | 8.5 | 33 | 4.5 | 8 | 50 | 100 |
| 2472.04.020 | M20 | 10 | 43 | 6.5 | 10 | 52 | 133 |
| 2472.04.024 | M24 | 13 | 48 | 8 | 12 | 91 | 223 |

# SPRING PLUNGER, WITH SPRING LOADED PIN, WITH SLOT, STANDARD SPRING FORCE

## 2472.05.

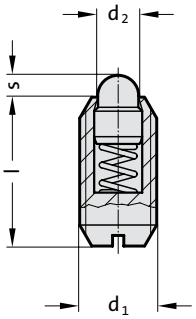

**2472.05.** **Spring plunger, with spring loaded pin, with slot, standard spring force**

| Order No | $d_1$ | $d_2$ | l | s | Spring force [N] initial | Spring force [N] final |
|---|---|---|---|---|---|---|
| 2472.05.004 | 4 | 1.8 | 9 | 1.5 | 4.5 | 12.5 |
| 2472.05.005 | 5 | 2.4 | 12 | 2 | 5 | 13 |
| 2472.05.006 | 6 | 2.7 | 14 | 2 | 6 | 17 |
| 2472.05.008 | 8 | 3.8 | 16 | 2 | 16 | 33 |
| 2472.05.010 | 10 | 4.5 | 19 | 2.5 | 19 | 42 |
| 2472.05.012 | 12 | 6.2 | 22 | 3.5 | 22 | 57 |
| 2472.05.016 | 16 | 8.5 | 24 | 4.5 | 38 | 78 |
| 2472.05.020 | 20 | 10 | 30 | 6.5 | 39 | 81 |
| 2472.05.024 | 24 | 13 | 34 | 8 | 72 | 155 |

**Material:**
Sleeve: Free machining steel, burnished
Pin: Free machining steel hardened, burnished
Spring: Nirosta

**Note:**
For locking and for pressing upwards or downwards.
Temperature operating range: max. 250°C

## 2472.35.

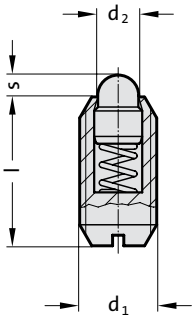

**2472.35.** **Spring plunger, with spring loaded pin, with slot, standard spring force**

| Order No | $d_1$ | $d_2$ | l | s | Spring force [N] initial | Spring force [N] final |
|---|---|---|---|---|---|---|
| 2472.35.004 | 4 | 1.8 | 9 | 1.5 | 4.5 | 12.5 |
| 2472.35.005 | 5 | 2.4 | 12 | 2 | 5 | 13 |
| 2472.35.006 | 6 | 2.7 | 14 | 2 | 6 | 17 |
| 2472.35.008 | 8 | 3.8 | 16 | 2 | 16 | 33 |
| 2472.35.010 | 10 | 4.5 | 19 | 2.5 | 19 | 42 |
| 2472.35.012 | 12 | 6.2 | 22 | 3.5 | 22 | 57 |
| 2472.35.016 | 16 | 8.5 | 24 | 4.5 | 38 | 78 |
| 2472.35.020 | 20 | 10 | 30 | 6.5 | 39 | 81 |
| 2472.35.024 | 24 | 13 | 34 | 8 | 72 | 155 |

**Material:**
Sleeve: Inox 1.4305
Pin: Inox 1.4305
Spring: Nirosta

**Note:**
For locking and for pressing upwards or downwards.
Temperature operating range: max. 250°C

# SPRING PLUNGER, WITH SPRING LOADED PIN, WITH SLOT, INCREASED SPRING FORCE

## 2472.06.

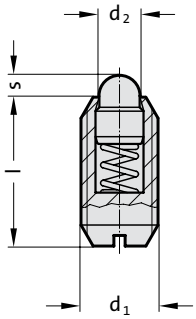


**Material:**
Sleeve: Free machining steel, burnished
Pin: Free machining steel hardened, burnished
Spring: Nirosta

**Note:**
For locking and for pressing upwards or downwards.
Temperature operating range: max. 250°C
Identification of increased spring force by two longitudinal marks on the sleeve.

**2472.06. Spring plunger, with spring loaded pin, with slot, increased spring force**

| Order No | $d_1$ | $d_2$ | l | s | Spring force [N] initial | Spring force [N] final |
|---|---|---|---|---|---|---|
| 2472.06.006 | M6 | 2.7 | 14 | 2 | 11 | 25 |
| 2472.06.008 | M8 | 3.8 | 16 | 2 | 23 | 59 |
| 2472.06.010 | M10 | 4.5 | 19 | 2.5 | 20 | 54 |
| 2472.06.012 | M12 | 6.2 | 22 | 3.5 | 38 | 96 |
| 2472.06.016 | M16 | 8.5 | 24 | 4.5 | 50 | 100 |
| 2472.06.020 | M20 | 10 | 30 | 6.5 | 52 | 133 |
| 2472.06.024 | M24 | 13 | 34 | 8 | 91 | 223 |

## 2472.36.

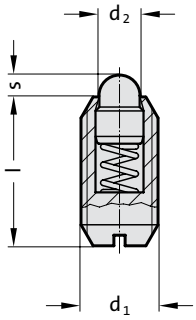


**Material:**
Sleeve: Inox 1.4305
Pin: Inox 1.4305
Spring: Nirosta

**Note:**
For locking and for pressing upwards or downwards.
Temperature operating range: max. 250°C
Identification of increased spring force by two longitudinal marks on the sleeve.

**2472.36. Spring plunger, with spring loaded pin, with slot, increased spring force**

| Order No | $d_1$ | $d_2$ | l | s | Spring force [N] initial | Spring force [N] final |
|---|---|---|---|---|---|---|
| 2472.36.006 | M6 | 2.7 | 14 | 2 | 11 | 25 |
| 2472.36.008 | M8 | 3.8 | 16 | 2 | 23 | 59 |
| 2472.36.010 | M10 | 4.5 | 19 | 2.5 | 20 | 54 |
| 2472.36.012 | M12 | 6.2 | 22 | 3.5 | 38 | 96 |
| 2472.36.016 | M16 | 8.5 | 24 | 4.5 | 50 | 100 |
| 2472.36.020 | M20 | 10 | 30 | 6.5 | 52 | 133 |
| 2472.36.024 | M24 | 13 | 34 | 8 | 91 | 223 |

# SPRING PLUNGER, WITH SPRING LOADED PIN, STRAIGHT VERSION, WITH COLLAR
# SPRING PLUNGER, WITH SPRING LOADED BALL, STRAIGHT VERSION

## 2473.01.

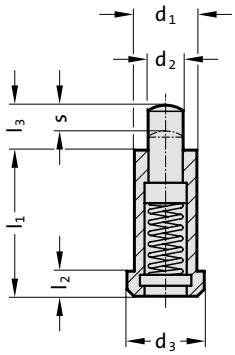

**2473.01.** **Spring plunger, with spring loaded pin, straight version, with collar**

| Order No | $d_1$ | $d_2$ | $d_3$ | $l_1$ | $l_2$ | $l_3$ | s | Spring force [N] initial | Spring force [N] final |
|---|---|---|---|---|---|---|---|---|---|
| 2473.01.006 | 6 | 2.7 | 8 | 20 | 3.2 | 6 | 3.5 | 10 | 22 |
| 2473.01.008 | 8 | 3.9 | 10 | 24 | 3.2 | 8 | 4.5 | 30 | 88 |
| 2473.01.010 | 10 | 5.9 | 13 | 30 | 4 | 10 | 5.5 | 42 | 110 |
| 2473.01.012 | 12 | 7.9 | 16 | 36 | 5 | 12 | 6.5 | 50 | 130 |

**Material:**
Sleeve: Free machining steel, burnished
Pin: Steel, case hardened, burnished
Spring: Nirosta

**Note:**
For use in toolmaking as forcing pins and spring loaded limit stops.
Neither the threaded cartridge nor any of its components can escape from the mounting.
Temperature operating range: max. 250 °C

## 2473.02.

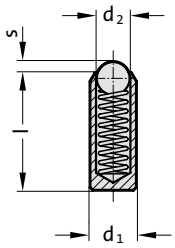

**2473.02.** **Spring plunger, with spring loaded ball, straight version**

| Order No | $d_1$ | $d_2$ | l | s | Spring force [N] initial | Spring force [N] final |
|---|---|---|---|---|---|---|
| 2473.02.030 | 3 | 2 | 7 | 0.65 | 4.5 | 7.5 |
| 2473.02.035 | 3.5 | 2.5 | 9 | 0.8 | 6 | 14.5 |
| 2473.02.040 | 4 | 3 | 11 | 0.9 | 8 | 14 |
| 2473.02.045 | 4.5 | 3.2 | 12 | 0.95 | 9.5 | 16.5 |
| 2473.02.050 | 5 | 3.5 | 13 | 1 | 11 | 18 |
| 2473.02.055 | 5.5 | 4 | 14 | 1.2 | 15.5 | 25 |
| 2473.02.060 | 6 | 4.5 | 15 | 1.5 | 18 | 31 |

**Material:**
Sleeve: Nirosta 1.4305
Ball: Nirosta hardened
Spring: Nirosta

**Note:**
For locking and for pressing upwards or downwards.
Temperature operating range: max. 250 °C

# SPRING PLUNGER, WITH SPRING LOADED BALL, STRAIGHT VERSION, WITH COLLAR

## 2475.01.

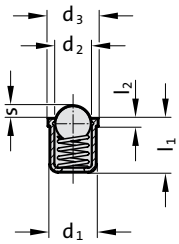


**Material:**
Sleeve: Delrin blue (POM)
Ball: Delrin white (POM)
Spring: Nirosta

**Note:**
For locking and for pressing upwards or downwards.
Temperature operating range: –30°C to +50°C

**2475.01.** **Spring plunger, with spring loaded ball, straight version, with collar**

| Order No | $d_1$ | $d_2$ | $d_3$ | $l_1$ | $l_2$ | s | Spring force [N] initial | Spring force [N] final |
|---|---|---|---|---|---|---|---|---|
| 2475.01.004 | 4 | 3 | 4.6 | 5 | 1 | 0.8 | 2.5 | 6.5 |
| 2475.01.005 | 5 | 4 | 5.6 | 6 | 1 | 1 | 6 | 9.4 |
| 2475.01.006 | 6 | 5 | 6.5 | 7 | 1 | 1.6 | 6.5 | 13 |
| 2475.01.008 | 8 | 6.5 | 8.5 | 9 | 1 | 1.9 | 8 | 18 |
| 2475.01.010 | 10 | 8 | 11 | 13.5 | 1.5 | 2.4 | 12 | 23 |
| 2475.01.012 | 12 | 10 | 13 | 16 | 1.5 | 3.3 | 13 | 25 |

## 2475.02.

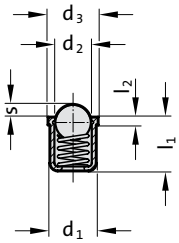


**Material:**
Sleeve: Nirosta 1.4305
Ball: Nirosta hardened
Spring: Nirosta

**Note:**
For locking and for pressing upwards or downwards.
Temperature operating range: –30°C to +50°C

**2475.02.** **Spring plunger, with spring loaded ball, straight version, with collar**

| Order No | $d_1$ | $d_2$ | $d_3$ | $l_1$ | $l_2$ | s | Spring force [N] initial | Spring force [N] final |
|---|---|---|---|---|---|---|---|---|
| 2475.02.004 | 4 | 3 | 4.6 | 5 | 1 | 0.8 | 2.5 | 6.5 |
| 2475.02.005 | 5 | 4 | 5.6 | 6 | 1 | 1 | 6 | 9.4 |
| 2475.02.006 | 6 | 5 | 6.5 | 7 | 1 | 1.6 | 6.5 | 13 |
| 2475.02.008 | 8 | 6.5 | 8.5 | 9 | 1 | 1.9 | 8 | 18 |
| 2475.02.010 | 10 | 8 | 11 | 13.5 | 1.5 | 2.4 | 12 | 23 |
| 2475.02.012 | 12 | 10 | 13 | 16 | 1.5 | 3.3 | 13 | 25 |

# SPRING PLUNGER, WITH SPRING LOADED BALL, STRAIGHT VERSION, WITH COLLAR

## 2475.03.

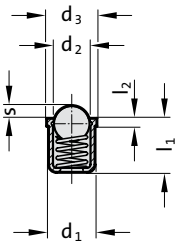

**2475.03.** **Spring plunger, with spring loaded ball, straight version, with collar**

| Order No | $d_1$ | $d_2$ | $d_3$ | $l_1$ | $l_2$ | s | Spring force [N] initial | Spring force [N] final |
|---|---|---|---|---|---|---|---|---|
| 2475.03.004 | 4 | 3 | 4.5 | 5 | 1 | 0.8 | 3 | 6 |
| 2475.03.005 | 5 | 4 | 5.5 | 6 | 1 | 1 | 4 | 6.5 |
| 2475.03.006 | 6 | 5 | 6.5 | 7 | 1 | 1.6 | 6 | 11.5 |
| 2475.03.008 | 8 | 6.5 | 8.5 | 9 | 1 | 1.9 | 8 | 12.5 |

**Material:**
Sleeve: Brass
Ball: Nirosta hardened
Spring: Nirosta

**Note:**
For locking and for pressing upwards or downwards.
Temperature operating range: max. 250°C

## 2475.04.

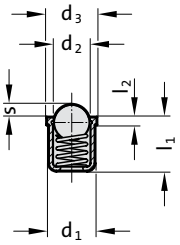

**2475.04.** **Spring plunger, with spring loaded ball, straight version, with collar**

| Order No | $d_1$ | $d_2$ | $d_3$ | $l_1$ | $l_2$ | s | Spring force [N] initial | Spring force [N] final |
|---|---|---|---|---|---|---|---|---|
| 2475.04.004 | 4 | 3 | 4.6 | 5 | 0.9 | 1 | 2.5 | 6 |
| 2475.04.005 | 5 | 4 | 5.6 | 6 | 0.9 | 1.4 | 3 | 6.5 |
| 2475.04.006 | 6 | 5 | 6.5 | 7 | 1 | 1.8 | 5.5 | 11.5 |
| 2475.04.008 | 8 | 6.5 | 8.5 | 9 | 1.1 | 2.4 | 7 | 12.5 |
| 2475.04.010 | 10 | 8.5 | 11 | 13.5 | 1.7 | 3.3 | 8.5 | 18.5 |
| 2475.04.012 | 12 | 10 | 13 | 16 | 2.3 | 4 | 12 | 26.5 |

**Material:**
Sleeve: Nirosta 1.4303
Ball: Nirosta hardened
Spring: Nirosta

**Note:**
For locking and for pressing upwards or downwards.
Temperature operating range: max. 250°C

# ACCESSORIES FOR SPRING PLUNGERS

**2470.10.11**
**Lock wrench**
**for 2470.10./20.**

**2470.12.010.017**
**Lock wrench**
**for 2479. and 3479.**

**2472.11.**
**Lock wrench**
**for 2472.01./02.**

| Order No | for thread |
|---|---|
| 2472.11.003.1 | M3 |
| 2472.11.004.1 | M4 |
| 2472.11.005.1 | M5 |
| 2472.11.006.1 | M6 |
| 2472.11.008.1 | M8 |
| 2472.11.010.1 | M10 |
| 2472.11.012.1 | M12 |
| 2472.11.016.1 | M16 |
| 2472.11.020.1 | M20 |
| 2472.11.024 | M24 |

# STRIPPING UNIT, STOCK LIFTER, LIFTING UNIT, SPRING RAM

# STRIPPING UNIT, WALL AND BOTTOM MOUNTING

2477. .1.01

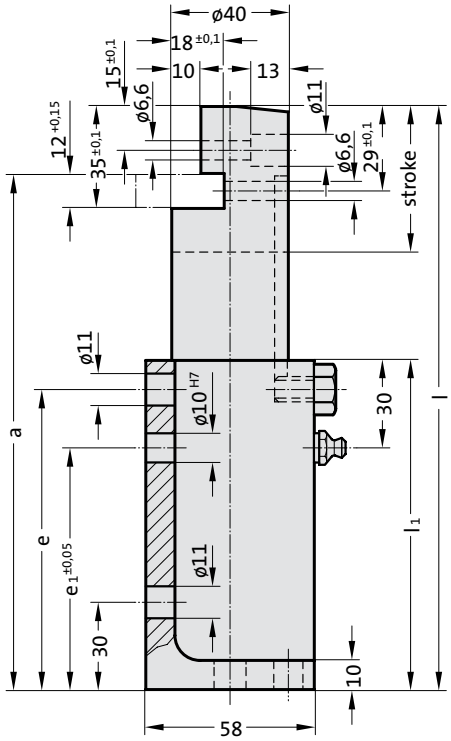


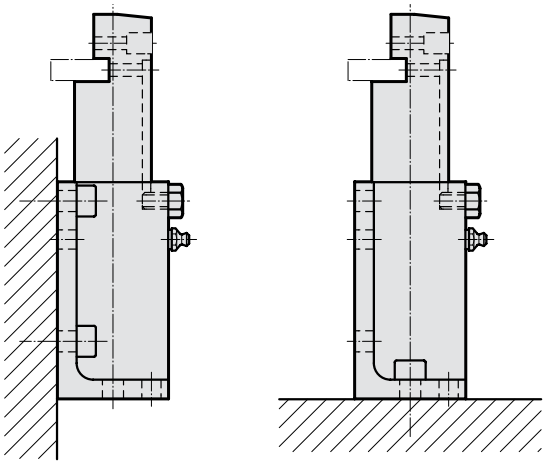

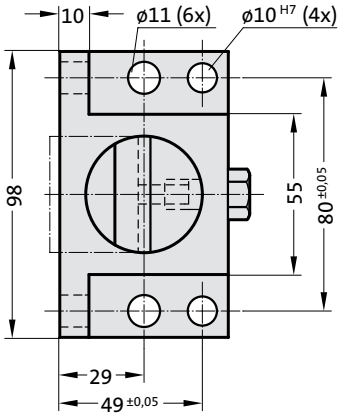


**2477. .1.01 Stripping unit, wall and bottom mounting**

| Order No | Stroke | Initial spring force [daN] | l | $l_1$ | a | e | $e_1$ |
|---|---|---|---|---|---|---|---|
| 2477.050.00050.1.01 | 50 | 50 | 200 | 113 | 177 | 103 | 83 |
| 2477.050.00100.1.01 | 50 | 100 | 200 | 113 | 177 | 103 | 83 |
| 2477.050.00150.1.01 | 50 | 150 | 200 | 113 | 177 | 103 | 83 |
| 2477.050.00200.1.01 | 50 | 200 | 200 | 113 | 177 | 103 | 83 |
| 2477.080.00050.1.01 | 80 | 50 | 260 | 143 | 237 | 133 | 113 |
| 2477.080.00100.1.01 | 80 | 100 | 260 | 143 | 237 | 133 | 113 |
| 2477.080.00150.1.01 | 80 | 150 | 260 | 143 | 237 | 133 | 113 |
| 2477.080.00200.1.01 | 80 | 200 | 260 | 143 | 237 | 133 | 113 |

# STRIPPING UNIT, FLANGED MOUNTING

## 2477. .1.02

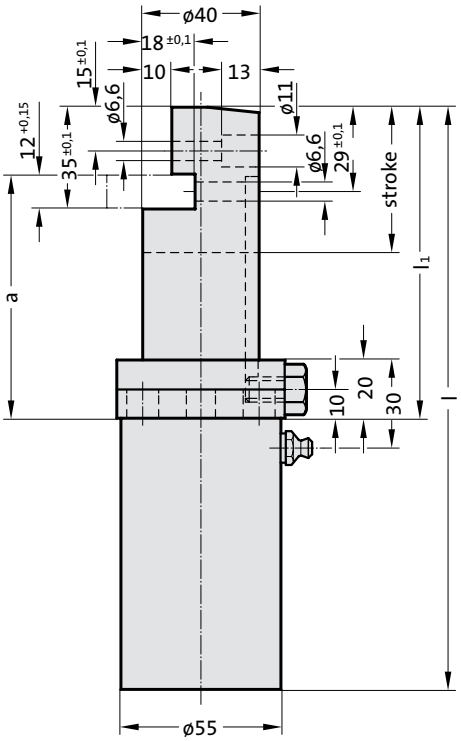

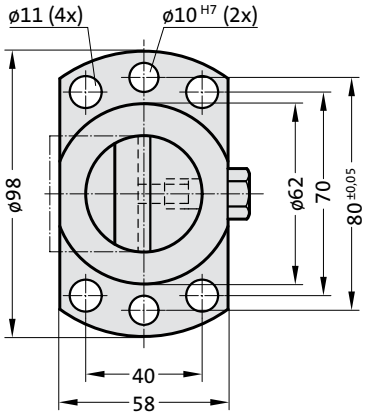


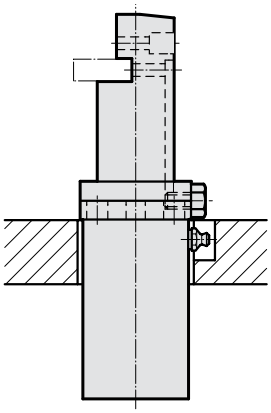

### 2477. .1.02 Stripping unit, flanged mounting

| Order No | Stroke | Initial spring force [daN] | l | $l_1$ | a |
|---|---|---|---|---|---|
| 2477.050.00050.1.02 | 50 | 50 | 200 | 107 | 84 |
| 2477.050.00100.1.02 | 50 | 100 | 200 | 107 | 84 |
| 2477.050.00150.1.02 | 50 | 150 | 200 | 107 | 84 |
| 2477.050.00200.1.02 | 50 | 200 | 200 | 107 | 84 |
| 2477.080.00050.1.02 | 80 | 50 | 260 | 137 | 114 |
| 2477.080.00100.1.02 | 80 | 100 | 260 | 137 | 114 |
| 2477.080.00150.1.02 | 80 | 150 | 260 | 137 | 114 |
| 2477.080.00200.1.02 | 80 | 200 | 260 | 137 | 114 |

# STOCK LIFTER

**2478.10.**

**Stock lifter**

| Order No | Stroke$_{max.}$ | $l_{min.}$ | l |
|---|---|---|---|
| 2478.10.□□□□□.025 | 25 | 121 | 146 |
| 2478.10.□□□□□.050 | 50 | 146 | 196 |
| 2478.10.□□□□□.080 | 80 | 176 | 256 |
| 2478.10.□□□□□.100 | 100 | 196 | 296 |
| 2478.10.□□□□□.125 | 125 | 221 | 346 |
| 2478.10.□□□□□.150 | 150 | 246 | 396 |
| 2478.10.□□□□□.163 | 163 | 259 | 422 |
| 2478.10.□□□□□.175 | 175 | 271 | 446 |
| 2478.10.□□□□□.200 | 200 | 296 | 496 |
| 2478.10.□□□□□.210 | 210 | 306 | 516 |

*complete with initial spring force
Spring force marking:
Initial spring force [daN] - Pressure [bar]
.00050. - 28
.00100. - 56
.00150. - 84
.00200. - 113
.00250. - 141
.00320. - 180

## 2478.10.

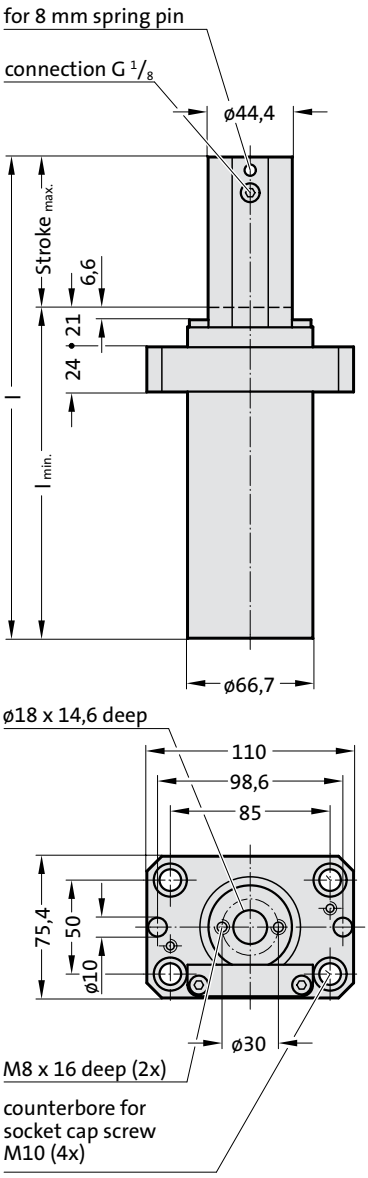


**Description:**
All component lifters in the various gas spring classes are of the same design and the different spring forces are achieved solely by means of different gas pressures.
The pressure can be topped up or reduced via the piston rod.

**Note:**
Pressure medium: Nitrogen - $N_2$
Max. filling pressure: 180 bar
Min. filling pressure: 25 bar
Working temperature: 0°C to +80°C
Temperature related force increase: ± 0,3%/°C
Max. recommended extensions per minute: approx. 80 to 100 (at 20°C)
Max. piston speed: 1,6 m/s
Order No for spare parts kit: 2478.10.00320
Spring forces as per spring diagram.
Upon customers request, also available unfilled, Order No 2478.10.00000....

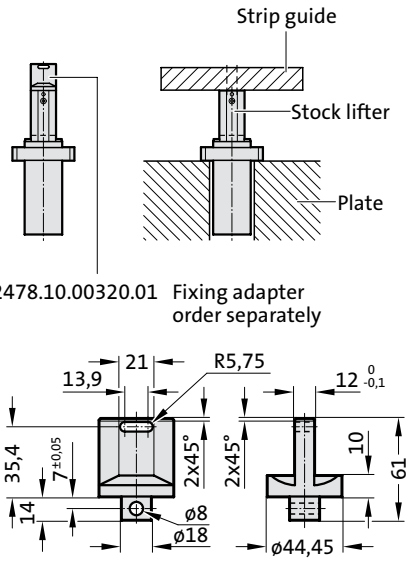


Initial spring force
versus charge pressure

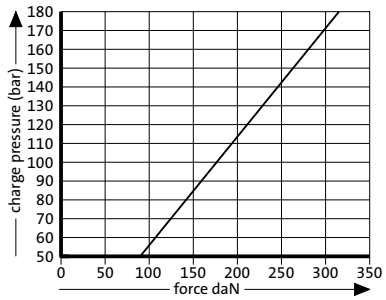


Spring force Diagram displacement versus stroke rise

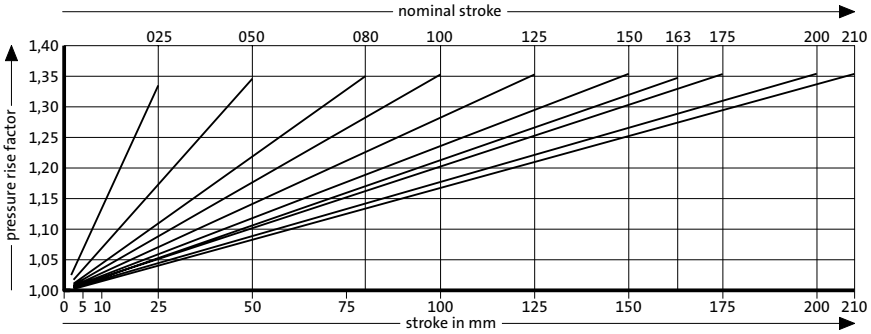


Pressure rise factor accounts for displacement but not external influences!

# STOCK LIFTER

**Description:**
The cylinder base can be used for topping up and reducing gas pressure and for inter-connection arrangements.

**Note:**
Stocklifters are equipped with a “PowerLine” 2487.12.00170. gas spring with no option for wear compensation, so complete replacement is required.

Initial spring force: 170 daN
Pressure medium: Nitrogen – $N_2$
Max. filling pressure: 180 bar
Min. filling pressure: 25 bar
Working temperature: 0°C to +80°C
Temperature related force increase: ± 0,3%/°C
Max. recommended extensions per minute: approx. 40 to 100 (at 20°C)
Max. piston speed: 1,6 m/s
Max. usable stroke: 100%

Spring forces as per spring diagram.

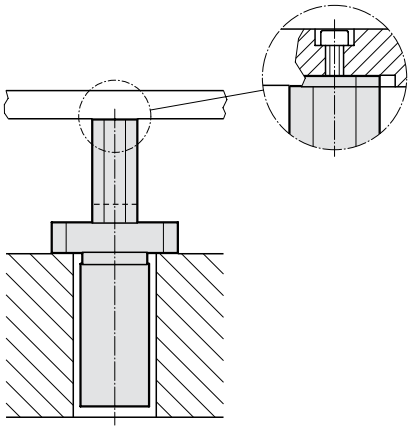

2478.30. . 1

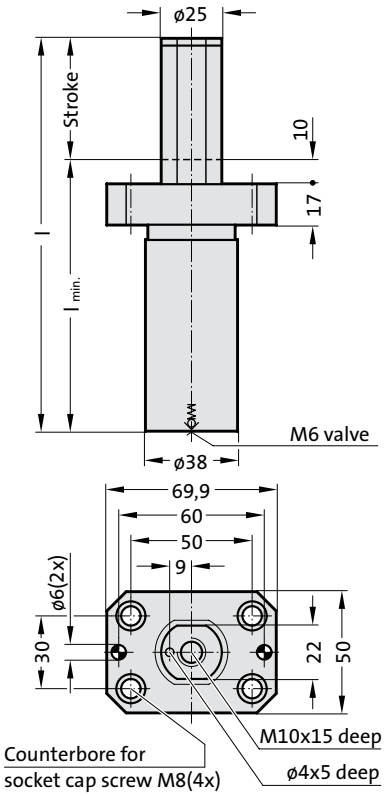

**2478.30. .1**

**Stock lifter**

| Order No | $Stroke_{max.}$ | $l_{min.}$ | l |
|---|---|---|---|
| 2478.30.00170.025.1 | 25 | 87 | 112 |
| 2478.30.00170.038.1 | 38 | 100 | 138 |
| 2478.30.00170.050.1 | 50 | 112 | 162 |
| 2478.30.00170.080.1 | 80 | 145 | 225 |
| 2478.30.00170.100.1 | 100 | 165 | 265 |
| 2478.30.00170.125.1 | 125 | 190 | 315 |

Initial spring force
versus charge pressure

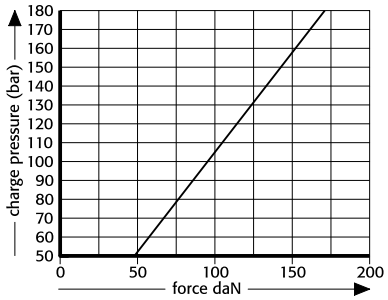


Spring force Diagram displacement
versus stroke rise

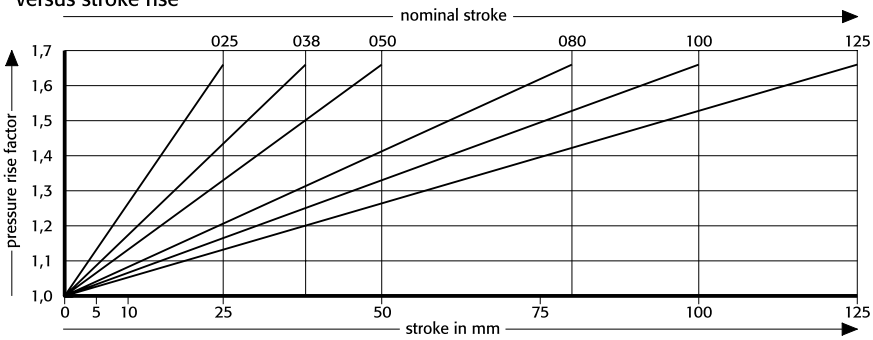


Pressure rise factor accounts for displacement but not external influences!

# STOCK LIFTER WITH ATTACHMENT LUG

**2478.30. .2**

**Stock lifter with attachment lug**

| Order No | Stroke$_{max.}$ | $l_{min.}$ | l |
|---|---|---|---|
| 2478.30.00170.025.2 | 25 | 102 | 127 |
| 2478.30.00170.038.2 | 38 | 115 | 153 |
| 2478.30.00170.050.2 | 50 | 127 | 177 |
| 2478.30.00170.080.2 | 80 | 160 | 240 |
| 2478.30.00170.100.2 | 100 | 180 | 280 |
| 2478.30.00170.125.2 | 125 | 205 | 330 |

2478.30. .2

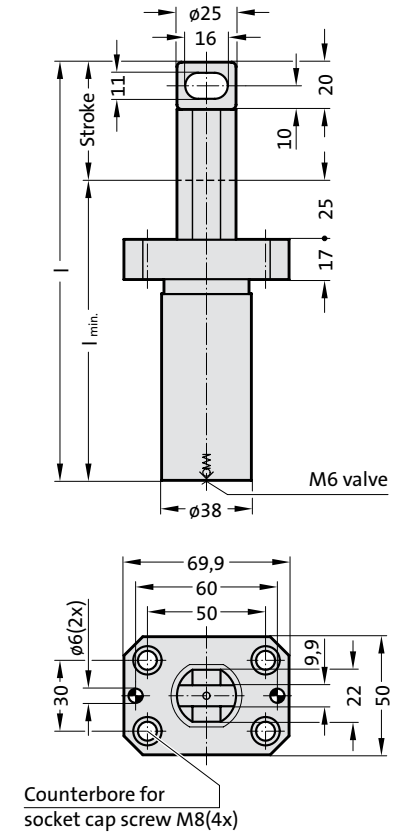


**Description:**

The cylinder base can be used for topping up and reducing gas pressure and for inter-connection arrangements.

**Note:**

Stocklifters are equipped with a “PowerLine” 2487.12.00170. gas spring with no option for wear compensation, so complete replacement is required.

Initial spring force: 170 daN
Pressure medium: Nitrogen – $N_2$
Max. filling pressure: 180 bar
Min. filling pressure: 25 bar
Working temperature: 0°C to +80°C
Temperature related force increase: ± 0,3%/°C
Max. recommended extensions per minute: approx. 40 to 100 (at 20°C)
Max. piston speed: 1,6 m/s
Max. usable stroke: 100%

Spring forces as per spring diagram.

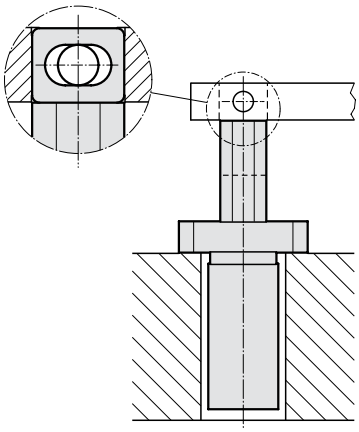

Initial spring force
versus charge pressure

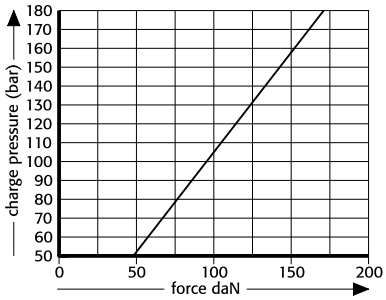


Spring force Diagram displacement
versus stroke rise

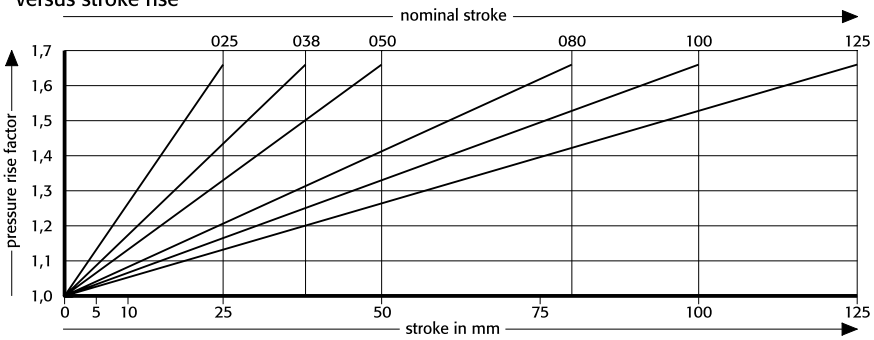


Pressure rise factor accounts for displacement but not external influences!

# STRIPPER

**Description:**
The stripper is used for stripping 2478.30.00170.3 of sheet metal parts after the forming operation (eg folding functions).
Gas refill, reduce and composite assembly are possible over the cylinder tube sheet.

**Note:**
Strippers are equipped with a “Power Line” 2487.12.00170. gas spring with no option for wear compensation, so complete replacement is required.

Initial spring force: 170 daN
Pressure medium: Nitrogen - $N_2$
Max. filling pressure: 180 bar
Min. filling pressure: 25 bar
Working temperature: 0°C to +80°C
Temperature force increase: ± 0,3%/°C
Max. recommended extensions per minute: approx. 40 to 100 (at 20°C)
Max. piston speed: 1,6 m/s
Max. usable stroke: 100%

Spring forces as per spring diagram.

2478.30. .3

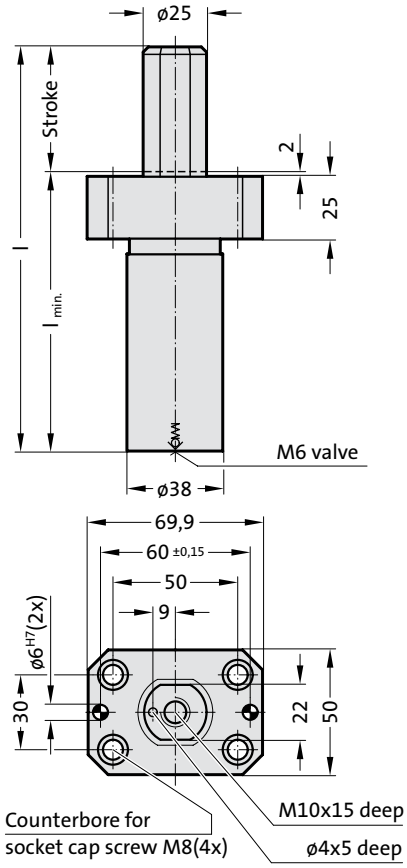

**2478.30. .3**

**Stripper**

| Order No | Stroke$_{max.}$ | $l_{min.}$ | l |
|---|---|---|---|
| 2478.30.00170.025.3 | 25 | 87 | 112 |
| 2478.30.00170.038.3 | 38 | 100 | 138 |
| 2478.30.00170.050.3 | 50 | 112 | 162 |
| 2478.30.00170.080.3 | 80 | 145 | 225 |
| 2478.30.00170.100.3 | 100 | 165 | 265 |
| 2478.30.00170.125.3 | 125 | 190 | 315 |

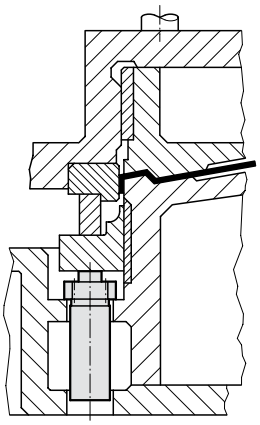

Initial spring force
versus charge pressure

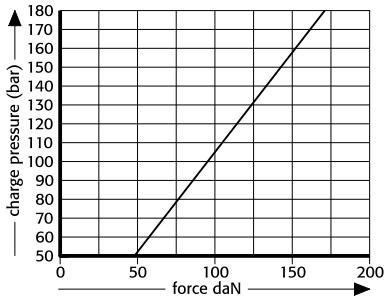


Spring force Diagram displacement
versus stroke rise

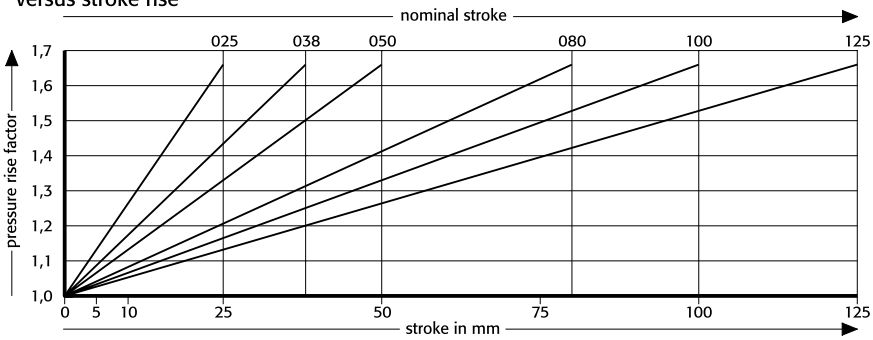


Pressure rise factor accounts for displacement but not external influences!

# LIFTING UNIT (NOT DAMPED/DAMPED) TO MERCEDES-BENZ

**2478.20.20.**

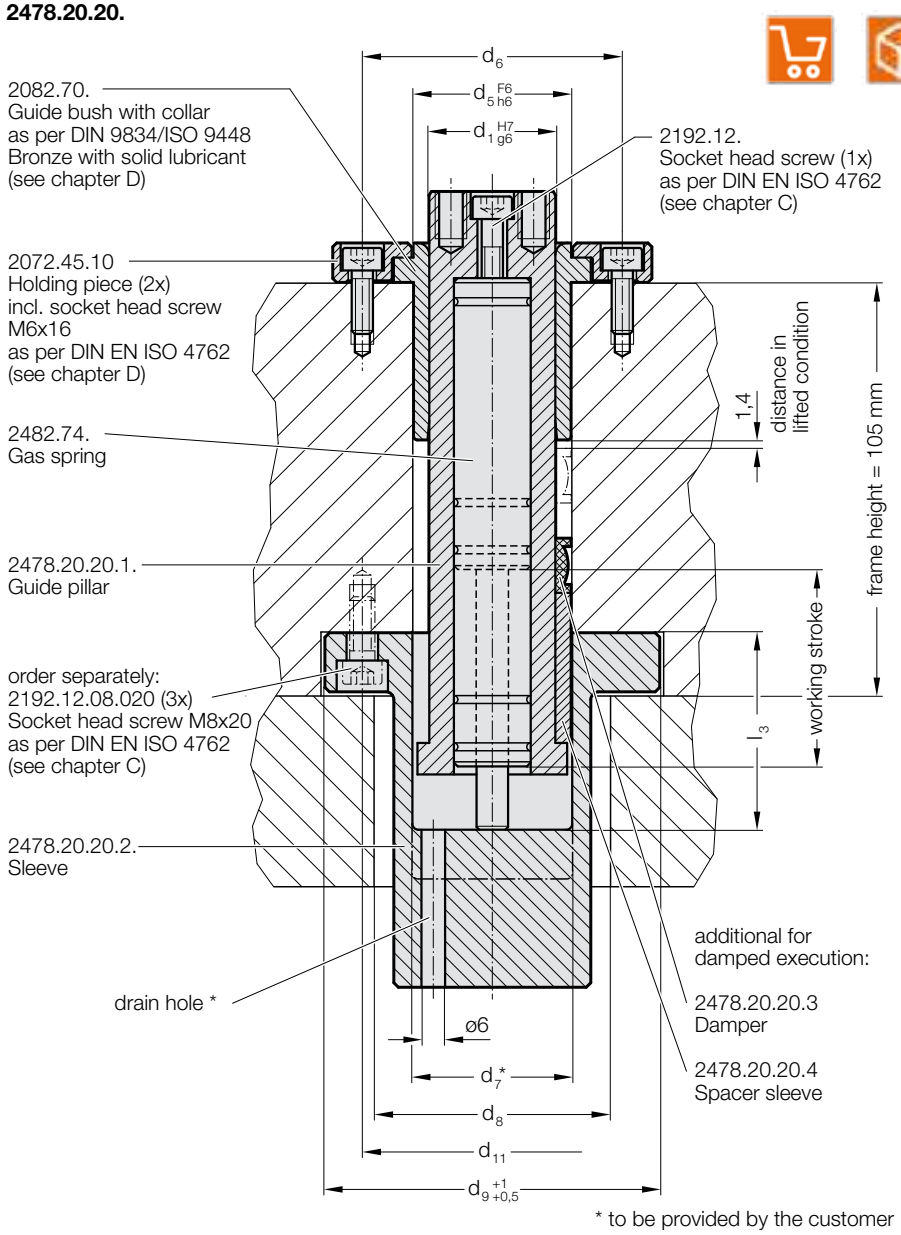

**Note:**

Frame height = 105 mm

Depending on the frame height and the installation type of the sleeve 2478.20.20.2. (l3 - tapped bore in the frame or cut-out in the cast), the countersink varies for the determination of the lifting path.

**Size 2* - version, damped**

Maximum lifting path 66 mm
Lifting path 66 mm; Distance height 0 mm
Lifting path 30 mm; Distance height 36 mm

**Size 3* - version, damped**

Maximum lifting path 80 mm
Lifting path 80 mm; spacing height 47 mm
Lifting path 70 mm; spacing height 57 mm

In order to maintain the clearance of 1.4 mm in a raised state (dampener to bushing), a distance sleeve is to be used between the damper and guide post flange.

* Distance height determined at the customer (delivery length: 61 mm)

### 2478.20.20. Lifting unit (not damped/damped) to Mercedes-Benz

| Size | Working stroke | Working stroke, damped | $d_1$ | $d_5$ | $d_6$ | $d_7$* | $d_8$ | $d_9$ | $d_{11}$ | $l_3$* |
|---|---|---|---|---|---|---|---|---|---|---|
| 1 | 5 - 35 | – | 32 | 40 | 66 | 40 | 60 | 85 | 67 | - |
| 2 | 40 - 70 | 30 - 66 | 32 | 40 | 66 | 40 | 60 | 85 | 67 | - |
| 3 | 75 - 115 | 70 - 80 | 32 | 40 | 66 | 40 | 60 | 85 | 67 | - |

*to be supplied by customer

The lifting unit must be ordered in three sizes with the respective order numbers of the individual parts:

| Size | 1 | 2 | 3 |
|---|---|---|---|
| Guide pillar | 2478.20.20.1.01 | 2478.20.20.1.02 | 2478.20.20.1.03 |
| Sleeve | – | 2478.20.20.2.02 | 2478.20.20.2.03 |
| Guide bushing | 2082.70.032 | 2082.70.032 | 2082.70.032 |
| Gas spring | 2482.74.00090.038.2 | 2482.74.00090.080.2 | 2482.74.00090.125.2 |
| Holding piece (2x) incl. socket head screw M6x16 DIN EN ISO 4762 | 2072.45.10 | 2072.45.10 | 2072.45.10 |
| Socket cap screw (1x) DIN EN ISO 4762 | 2192.12.06.030 | 2192.12.06.020 | 2192.12.06.030 |
| additional for damped execution: | | | |
| Damper | – | 2478.20.20.3 | 2478.20.20.3 |
| Spacer sleeve | – | 2478.20.20.4 | 2478.20.20.4 |

# GUIDE PILLAR FOR LIFTING UNIT TO MERCEDES-BENZ

2478.20.20.1.

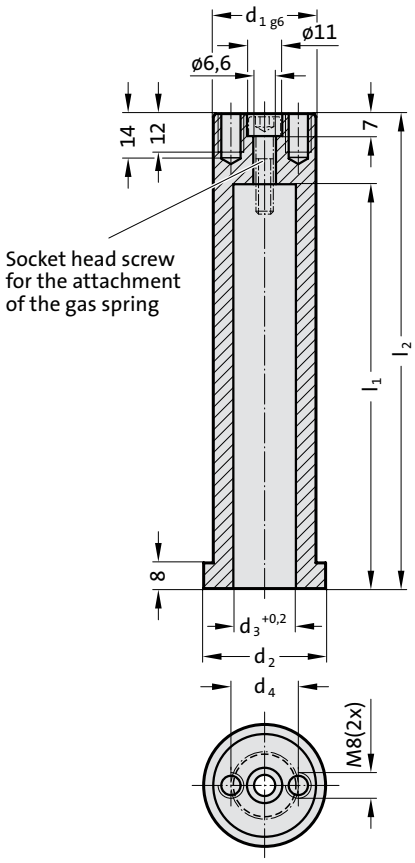


**Material:**
Steel, surface hardened
induction hardened 60 + 3 HRC
Hardness penetration depth > 1.8 mm

**Note:**
The socket head screw for the attachment of the gas spring is included with delivery.

**2478.20.20.1. Guide pillar for lifting unit to Mercedes-Benz**

| Order No | Size | $d_1$ | $d_2$ | $d_3$ | $d_4$ | $l_1$ | $l_2$ |
|---|---|---|---|---|---|---|---|
| 2478.20.20.1.01 | 1 | 32 | 38 | 19.5 | 21 | 81 | 113 |
| 2478.20.20.1.02 | 2 | 32 | 38 | 19.5 | 21 | 126 | 148 |
| 2478.20.20.1.03 | 3 | 32 | 38 | 19.5 | 21 | 176 | 208 |

# SLEEVE FOR LIFTING UNIT TO MERCEDES-BENZ

## 2478.20.20.2.

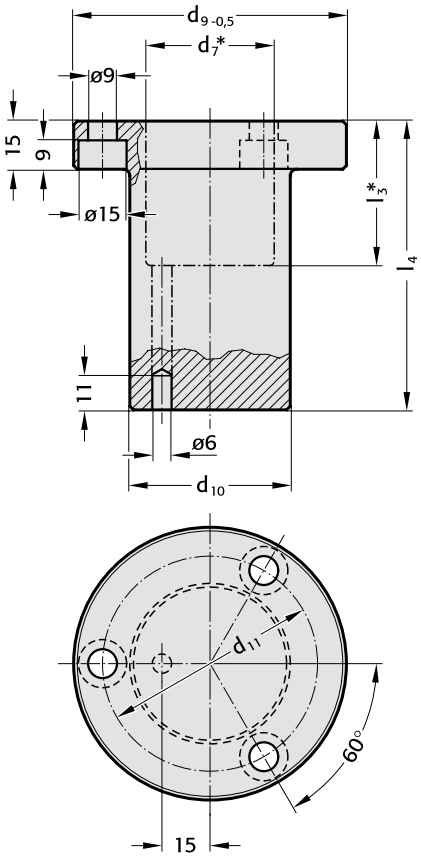

**Material:**
Steel

**Note:**
The sleeve is supplied without countersink. Integrating countersink $d_7$ (ø40) x $l_3$ (*to be provided by the customer) determines the lifting path. The drain hole is pre-drilled as a blind hole with a ø of 6 mm and must also be modified.

**2478.20.20.2. Sleeve for lifting unit to Mercedes-Benz**

| Order No | Size | $d_9$ | $d_{10}$ | $d_{11}$ | $l_4$ |
|---|---|---|---|---|---|
| 2478.20.20.2.02 | 2 | 85 | 50 | 67 | 90 |
| 2478.20.20.2.03 | 3 | 85 | 50 | 67 | 150 |

# DAMPER FOR LIFTING UNITS TO MERCEDES-BENZ

2478.20.20.3

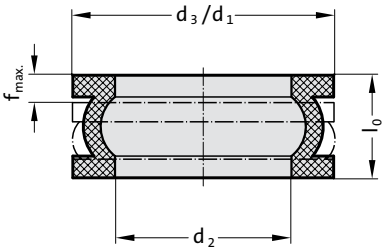


**Description:**
The damper element made of co-polyester elastomer is used in the jacking units in progressive dies in the automotive and white goods industry. Increasing stresses on screws and bolts are reduced by the low stress dampers. Reduced noise emission is also an additional positive side-effect. Two-ply dampers can be used depending on the mass or stroke.

**Benefits:**
- High absorption of force and energy
- Slight settlement
- Long service life and high level of operating safety
- Noise reduction
- High degree of effectiveness

**Material:**
Co-Polyester-Elastomer
Available in 55 Shore-D hardness levels.

**Technical data:**
Surroundings: Resistant to microbes, seawater, chemicals.
No absorption of water and no swelling.
Approved temperature range: -40°C to +90°C (-40°F to +194°F)

**2478.20.20.3 Damper for lifting units to Mercedes-Benz**

| Order No | $d_1$ | $d_2$ | $d_3$ | $l_0$ | $f_{max.}$ | $W_3$ [Nm/stroke]* |
|---|---|---|---|---|---|---|
| 2478.20.20.3 | 39.5 | 32.2 | 39.6 | 12.6 | 3.6 | 4 |

Total energy per stroke

# SPACER SLEEVE FOR LIFTING UNITS TO MERCEDES-BENZ

2478.20.20.4

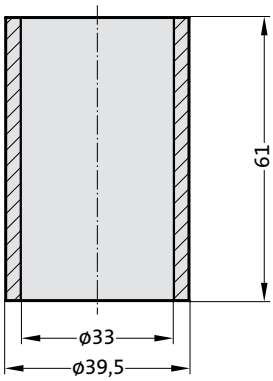

**Material:**
Steel, hardened

**Note:**
Height adjustment according to lifting path while using lifting unit 2478.20.20.

**2478.20.20.4 Spacer sleeve for lifting units to Mercedes-Benz**

# LIFTER, ROUND WITH PILOT PIN HOLE TO BMW STANDARD

2478.20.15.10.

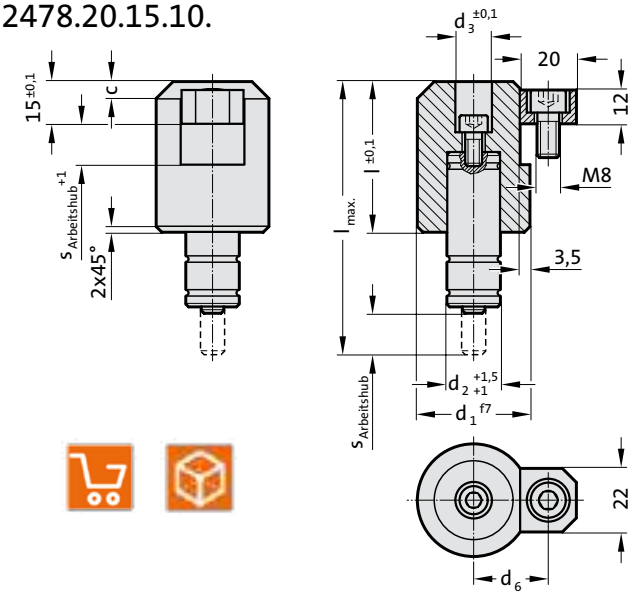


**Execution:**

The assembly consists of:

- Lifter
- Gas spring
  – ø 19 mm (1) = 2482.74.00090.
  Spring force 90 daN

  or
  – ø 25 mm (2) = 2480.21.00200.
  Spring force 200 daN
- Screw clamp
  incl. Socket head screw M8 x 16 to ISO 4762
- Socket head screw M6 x 12 to ISO 4762

**Note:**

*$S_{working\ stroke}$ suitable = max. allowable spring stroke minus 10% stroke reserve of nominal stroke length,

**2478.20.15.10. Lifter, round with pilot pin hole to BMW standard**

| | | | | | | | | | | | | | | | | | | |
|---|---|---|---|---|---|---|---|---|---|---|---|---|---|---|---|---|---|---|
| | | | $d_1$ | 28 | 28 | 30 | 30 | 35 | 35 | 40 | 40 | 40 | 40 | 40 | 50 | 50 | 50 | 50 |
| | | | $d_2$ | 19 | 19 | 19 | 19 | 25 | 25 | 19 | 19 | 19 | 25 | 25 | 19 | 19 | 25 | 25 |
| | | | $d_3$ | 10,5 | 12,5 | 10,5 | 12,5 | 12,5 | 16,5 | 10,5 | 12,5 | 16,5 | 12,5 | 16,5 | 12,5 | 16,5 | 12,5 | 16,5 |
| | | | $d_6$ | 20,5 | 20,5 | 21,5 | 21,5 | 24 | 24 | 26,5 | 26,5 | 26,5 | 26,5 | 26,5 | 31,5 | 31,5 | 31,5 | 31,5 |
| | | | c | 4x45° | 4x45° | 5x45° | 5x45° | 5x45° | 5x45° | 6x45° | 6x45° | 6x45° | 6x45° | 6x45° | 8x45° | 8x45° | 8x45° | 8x45° |
| l | lmax. | *$s_{working\ stroke}$ | Stroke Order no. (Part 3) | (Part 2) | | | | | | | | | | | | | | |
| 49 | 87 | 9 | 009 | .111. | .112. | .121. | .122. | .232. | .233. | .141. | .142. | .143. | .242. | .243. | .152. | .153. | .252. | .253. |
| 53,5 | 97 | 13,5 | 014 | .111. | .112. | .121. | .122. | .232. | .233. | .141. | .142. | .143. | .242. | .243. | .152. | .153. | .252. | .253. |
| 62,5 | 117 | 22,5 | 023 | .111. | .112. | .121. | .122. | .232. | .233. | .141. | .142. | .143. | .242. | .243. | .152. | .153. | .252. | .253. |
| 74 | 143 | 34 | 034 | .111. | .112. | .121. | .122. | .232. | .233. | .141. | .142. | .143. | .242. | .243. | .152. | .153. | .252. | .253. |
| 85 | 167 | 45 | 045 | .111. | .112. | .121. | .122. | .232. | .233. | .141. | .142. | .143. | .242. | .243. | .152. | .153. | .252. | .253. |
| 98,5 | 197 | 58,5 | 059 | .111. | .112. | .121. | .122. | .232. | .233. | .141. | .142. | .143. | .242. | .243. | .152. | .153. | .252. | .253. |
| 115 | 230 | 75 | 075 | .111. | .112. | .121. | .122. | .232. | .233. | .141. | .142. | .143. | .242. | .243. | .152. | .153. | .252. | .253. |
| 135 | 270 | 95 | 095 | .111. | .112. | .121. | .122. | .232. | .233. | .141. | .142. | .143. | .242. | .243. | .152. | .153. | .252. | .253. |
| 160 | 320 | 120 | 120 | .111. | .112. | .121. | .122. | .232. | .233. | .141. | .142. | .143. | .242. | .243. | .152. | .153. | .252. | .253. |

**Ordering Code (example):**

Order No. Part 1 Part 2 Part 3

**2 4 7 8 . 2 0 . 1 5 . 1 0 . 1 5 3 . 0 0 9**

| | |
|---|---|
| $s_{working\ stroke}$ | = Stroke – order no. |
| $d_3$ | = Order No |
| 10.5 mm | = (1) |
| 12.5 mm | = (2) |
| 16.5 mm | = (3) |
| $d_1$ | = Order No |
| 28 mm | = (1) |
| 30 mm | = (2) |
| 35 mm | = (3) |
| 40 mm | = (4) |
| 50 mm | = (5) |
| $d_2$ – Gas spring | = Order No |
| ∅ 19 mm – 2482.74.00090. | = (1) |
| ∅ 25 mm – 2480.21.00200. | = (2) |

Assembly (lifter with pilot pin hole)
to BMW standard
Lifter, round with pilot pin hole

# LIFTER UNIT WITH INSTALLATION BLOCK ACCORDING TO BMW STANDARD

2478.20.15.20.

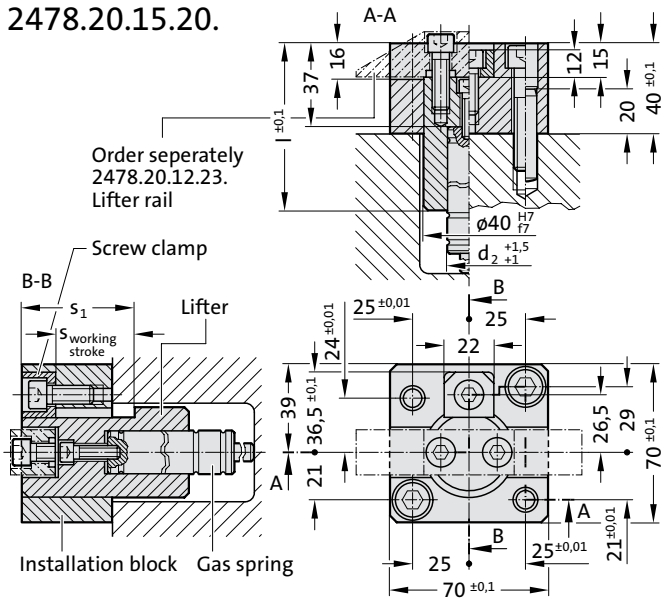

**Material:**

Steel

**Execution:**

Lifter unit with installation block comprises:

- Installation block
- Lifter
- Screw clamp
- Gas spring 2482.74.00090. or 2480.21.00200.
- Socket cap screw according to ISO 4762
  M6×20 (1x), M8×20 (1x), M8×25 (2x), M10×45 (2x)
- Dowel pin according to ISO 8735 ø 10×40 (2x)

**Note:**

Order separately (see installation example)

- 2478.20.15.23.: Lifter rail
- 2478.20.15.24.: Holding sleeve

On request, gas spring with a lower spring force available.

**Mounting example**

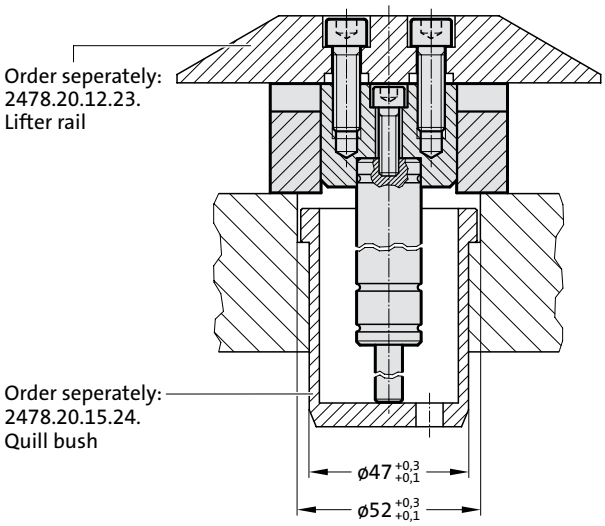


**2478.20.15.20. Lifter unit with installation block according to BMW standard**

| Order No | $d_2$ | l | $s_{working\ stroke}$ | $s_1$ | Gas spring |
|---|---|---|---|---|---|
| 2478.20.15.20.14.009 | 19 | 49 | 9 | 25 | 2482.74.00090.010.2 |
| 2478.20.15.20.24.009 | 25 | 49 | 9 | 25 | 2480.21.00200.010 |
| 2478.20.15.20.14.014 | 19 | 53.5 | 13.5 | 29.5 | 2482.74.00090.015.2 |
| 2478.20.15.20.24.014 | 25 | 53.5 | 13.5 | 29.5 | 2480.21.00200.015 |
| 2478.20.15.20.14.023 | 19 | 62.5 | 22.5 | 38.5 | 2482.74.00090.025.2 |
| 2478.20.15.20.24.023 | 25 | 62.5 | 22.5 | 38.5 | 2480.21.00200.025 |
| 2478.20.15.20.14.034 | 19 | 74 | 34 | 50 | 2482.74.00090.038.2 |
| 2478.20.15.20.24.034 | 25 | 74 | 34 | 50 | 2480.21.00200.038 |
| 2478.20.15.20.14.045 | 19 | 85 | 45 | 61 | 2482.74.00090.050.2 |
| 2478.20.15.20.24.045 | 25 | 85 | 45 | 61 | 2480.21.00200.050 |
| 2478.20.15.20.14.059 | 19 | 98.5 | 58.5 | 74.5 | 2482.74.00090.063.2 |
| 2478.20.15.20.24.059 | 25 | 98.5 | 58.5 | 74.5 | 2480.21.00200.063 |
| 2478.20.15.20.14.075 | 19 | 115 | 75 | 91 | 2482.74.00090.080.2 |
| 2478.20.15.20.24.075 | 25 | 115 | 75 | 91 | 2480.21.00200.080 |
| 2478.20.15.20.14.095 | 19 | 135 | 95 | 111 | 2482.74.00090.100.2 |
| 2478.20.15.20.24.095 | 25 | 135 | 95 | 111 | 2480.21.00200.100 |
| 2478.20.15.20.14.120 | 19 | 160 | 120 | 136 | 2482.74.00090.125.2 |
| 2478.20.15.20.24.120 | 25 | 160 | 120 | 136 | 2480.21.00200.125 |

# UNIVERSAL LIFTER UNIT, ACCORDING TO BMW STANDARD

2478.20.15.30.

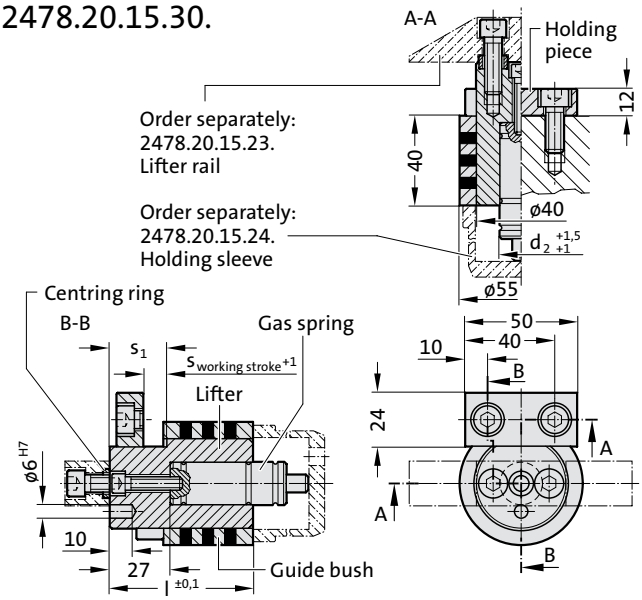


**Mounting example**

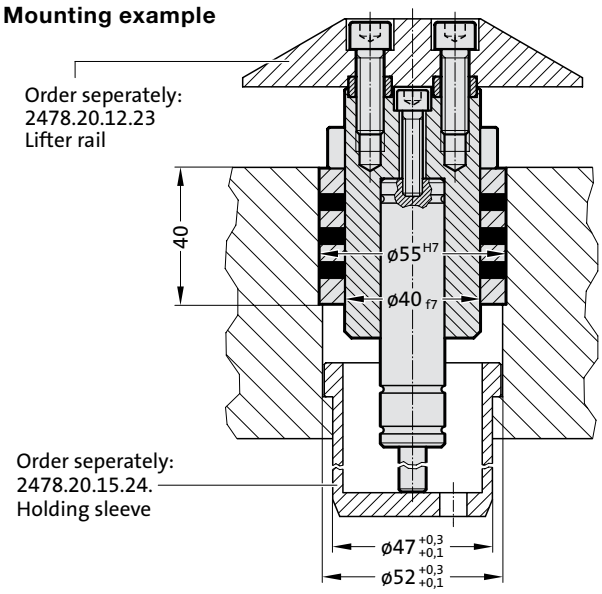


**Material:**

Steel

**Execution:**

Universal lifter unit comprises:

- Lifter
- Screw clamp
- Centring rings
- Guide bush
- Gas spring 2482.74.00090. or 2480.21.00200.
- Socket cap screw according to ISO 4762
  M6×25 (1x), M8×20 (2x), M8×25 (2x)

**Note:**

Order separately (see installation example)

- 2478.20.15.23.: Lifter rail
- 2478.20.15.24.: Holding sleeve

**2478.20.15.30. Universal lifter unit, according to BMW standard**

| Order No | $d_2$ | l | $s_{working\ stroke}$ | $s_1$ | Gas spring |
|---|---|---|---|---|---|
| 2478.20.15.30.14.9 | 19 | 64 | 9 | 25 | 2482.74.00090.010.2 |
| 2478.20.15.30.24.9 | 25 | 64 | 9 | 25 | 2480.21.00200.010 |
| 2478.20.15.30.14.14 | 19 | 68.5 | 13.5 | 29.5 | 2482.74.00090.015.2 |
| 2478.20.15.30.24.14 | 25 | 68.5 | 13.5 | 29.5 | 2480.21.00200.015 |
| 2478.20.15.30.14.23 | 19 | 77.5 | 22.5 | 38.5 | 2482.74.00090.025.2 |
| 2478.20.15.30.24.23 | 25 | 77.5 | 22.5 | 38.5 | 2480.21.00200.025 |
| 2478.20.15.30.14.34 | 19 | 89 | 34 | 50 | 2482.74.00090.038.2 |
| 2478.20.15.30.24.34 | 25 | 89 | 34 | 50 | 2480.21.00200.038 |
| 2478.20.15.30.14.45 | 19 | 100 | 45 | 63 | 2482.74.00090.050.2 |
| 2478.20.15.30.24.45 | 25 | 100 | 45 | 63 | 2480.21.00200.050 |
| 2478.20.15.30.14.59 | 19 | 113.5 | 58.5 | 74.5 | 2482.74.00090.063.2 |
| 2478.20.15.30.24.59 | 25 | 113.5 | 58.5 | 74.5 | 2480.21.00200.063 |
| 2478.20.15.30.14.75 | 19 | 130 | 75 | 91 | 2482.74.00090.080.2 |
| 2478.20.15.30.24.75 | 25 | 130 | 75 | 91 | 2480.21.00200.080 |
| 2478.20.15.30.14.95 | 19 | 150 | 95 | 111 | 2482.74.00090.100.2 |
| 2478.20.15.30.24.95 | 25 | 150 | 95 | 111 | 2480.21.00200.100 |
| 2478.20.15.30.14.120 | 19 | 175 | 120 | 136 | 2482.74.00090.125.2 |
| 2478.20.15.30.24.120 | 25 | 175 | 120 | 136 | 2480.21.00200.125 |

# UNIVERSAL LIFTER UNIT, ACCORDING TO BMW STANDARD

## 2478.20.15.40.

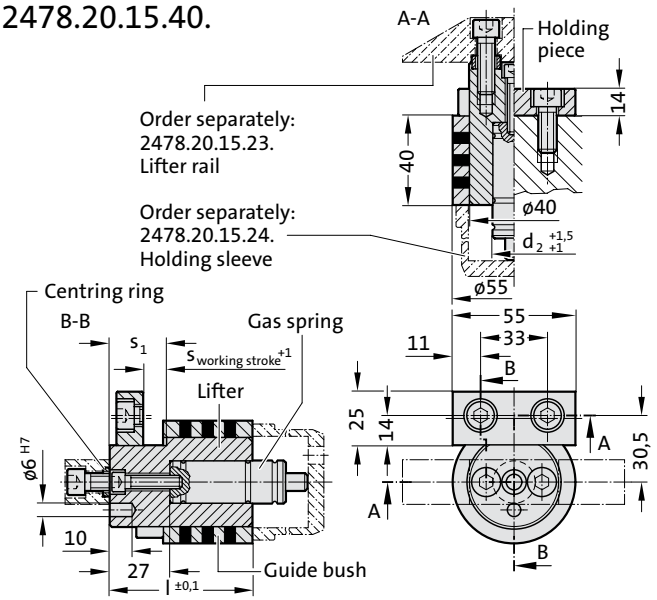

**Material:**

Steel

**Execution:**

Universal lifter unit comprises:

- Lifter
- Screw clamp
- Centring rings
- Guide bush
- Gas spring 2482.74.00090. or 2480.21.00200.
- Socket cap screw according to ISO 4762
  M6×25 (1x), M8×25 (2x), M10×20 (2x)

**Note:**

Order separately (see installation example)

- 2478.20.15.23.: Lifter rail
- 2478.20.15.24.: Holding sleeve

**Mounting example**

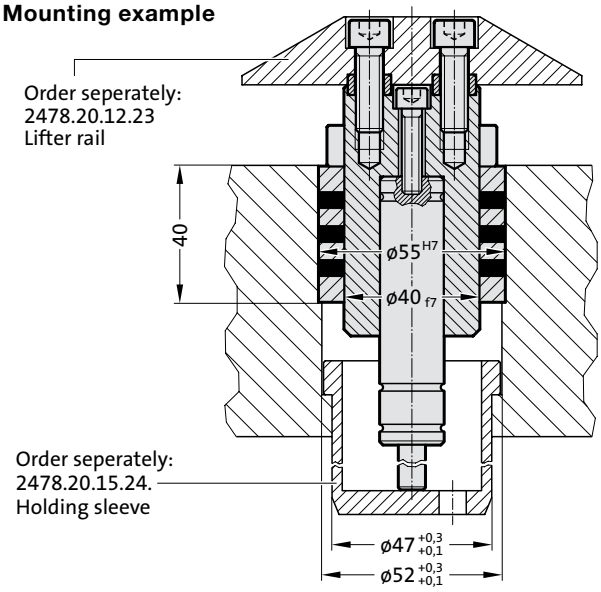


**2478.20.15.40.** **Universal lifter unit, according to BMW standard**

| Order No | $d_2$ | l | $s_{working\ stroke}$ | $s_1$ | Gas spring |
|---|---|---|---|---|---|
| 2478.20.15.40.14.009 | 19 | 64 | 9 | 25 | 2482.74.00090.010.2 |
| 2478.20.15.40.24.009 | 25 | 64 | 9 | 25 | 2480.21.00200.010 |
| 2478.20.15.40.14.14 | 19 | 68.5 | 13.5 | 29.5 | 2482.74.00090.015.2 |
| 2478.20.15.40.24.14 | 25 | 68.5 | 13.5 | 29.5 | 2480.21.00200.015 |
| 2478.20.15.40.14.23 | 19 | 77.5 | 22.5 | 38.5 | 2482.74.00090.025.2 |
| 2478.20.15.40.24.23 | 25 | 77.5 | 22.5 | 38.5 | 2480.21.00200.025 |
| 2478.20.15.40.14.034 | 19 | 89 | 34 | 50 | 2482.74.00090.038.2 |
| 2478.20.15.40.24.034 | 25 | 89 | 34 | 50 | 2480.21.00200.038 |
| 2478.20.15.40.14.040 | 19 | 100 | 40 | 56 | 2482.74.00090.050.2 |
| 2478.20.15.40.24.040 | 25 | 100 | 40 | 56 | 2480.21.00200.050 |
| 2478.20.15.40.14.045 | 19 | 100 | 45 | 61 | 2482.74.00090.050.2 |
| 2478.20.15.40.24.045 | 25 | 100 | 45 | 61 | 2480.21.00200.050 |
| 2478.20.15.40.14.050 | 19 | 113.5 | 50 | 66 | 2482.74.00090.063.2 |
| 2478.20.15.40.24.050 | 25 | 113.5 | 50 | 66 | 2480.21.00200.063 |
| 2478.20.15.40.14.054 | 19 | 113.5 | 54 | 70 | 2482.74.00090.063.2 |
| 2478.20.15.40.24.054 | 25 | 113.5 | 54 | 70 | 2480.21.00200.063 |
| 2478.20.15.40.14.59 | 19 | 113.5 | 58.5 | 74.5 | 2482.74.00090.063.2 |
| 2478.20.15.40.24.59 | 25 | 113.5 | 58.5 | 74.5 | 2480.21.00200.063 |
| 2478.20.15.40.14.065 | 19 | 130 | 65 | 81 | 2482.74.00090.080.2 |
| 2478.20.15.40.24.065 | 25 | 130 | 65 | 81 | 2480.21.00200.080 |
| 2478.20.15.40.14.070 | 19 | 130 | 70 | 86 | 2482.74.00090.080.2 |
| 2478.20.15.40.24.070 | 25 | 130 | 70 | 86 | 2480.21.00200.080 |

| Order No | $d_2$ | l | $s_{working\ stroke}$ | $s_1$ | Gas spring |
|---|---|---|---|---|---|
| 2478.20.15.40.14.075 | 19 | 130 | 75 | 91 | 2482.74.00090.080.2 |
| 2478.20.15.40.24.075 | 25 | 130 | 75 | 91 | 2480.21.00200.080 |
| 2478.20.15.40.14.080 | 19 | 150 | 80 | 96 | 2482.74.00090.100.2 |
| 2478.20.15.40.24.080 | 25 | 150 | 80 | 96 | 2480.21.00200.100 |
| 2478.20.15.40.14.085 | 19 | 150 | 85 | 101 | 2482.74.00090.100.2 |
| 2478.20.15.40.24.085 | 25 | 150 | 85 | 101 | 2480.21.00200.100 |
| 2478.20.15.40.14.090 | 19 | 150 | 90 | 106 | 2482.74.00090.100.2 |
| 2478.20.15.40.24.090 | 25 | 150 | 90 | 106 | 2480.21.00200.100 |
| 2478.20.15.40.14.095 | 19 | 150 | 95 | 111 | 2482.74.00090.100.2 |
| 2478.20.15.40.24.095 | 25 | 150 | 95 | 111 | 2480.21.00200.100 |
| 2478.20.15.40.14.100 | 19 | 175 | 100 | 116 | 2482.74.00090.125.2 |
| 2478.20.15.40.24.100 | 25 | 175 | 100 | 116 | 2480.21.00200.125 |
| 2478.20.15.40.14.105 | 19 | 175 | 105 | 121 | 2482.74.00090.125.2 |
| 2478.20.15.40.24.105 | 25 | 175 | 105 | 121 | 2480.21.00200.125 |
| 2478.20.15.40.14.110 | 19 | 175 | 110 | 126 | 2482.74.00090.125.2 |
| 2478.20.15.40.24.110 | 25 | 175 | 110 | 126 | 2480.21.00200.125 |
| 2478.20.15.40.14.115 | 19 | 175 | 115 | 131 | 2482.74.00090.125.2 |
| 2478.20.15.40.24.115 | 25 | 175 | 115 | 131 | 2480.21.00200.125 |
| 2478.20.15.40.14.120 | 19 | 175 | 120 | 136 | 2482.74.00090.125.2 |
| 2478.20.15.40.24.120 | 25 | 175 | 120 | 136 | 2480.21.00200.125 |

# LIFTER RAIL FOR LIFTER UNITS TO BMW STANDARD
# HOLDING SLEEVE FOR LIFTER UNITS TO BMW STANDARD

2478.20.15.00.03
Centering ring
(Order-No. for reordering)

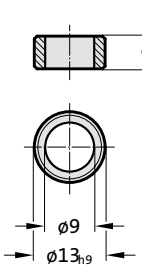


2478.20.15.23.

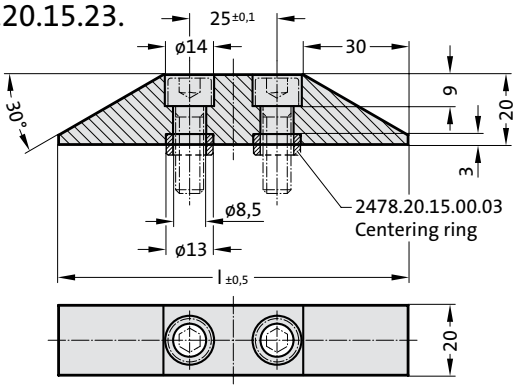


**Material:**
Steel

**Note:**
Delivery without screws and centring rings.

Screws and centring rings are already included in the scope of delivery for the lifter units 2478.20.15.20./30./40.

**2478.20.15.23.** **Lifter rail for lifter units to BMW standard**

| Order No | l |
|---|---|
| 2478.20.15.23.2020.100 | 100 |
| 2478.20.15.23.2020.125 | 125 |
| 2478.20.15.23.2020.150 | 150 |
| 2478.20.15.23.2020.175 | 175 |
| 2478.20.15.23.2020.200 | 200 |
| 2478.20.15.23.2020.250 | 250 |
| 2478.20.15.23.2020.300 | 300 |
| 2478.20.15.23.2020.350 | 350 |
| 2478.20.15.23.2020.400 | 400 |
| 2478.20.15.23.2020.450 | 450 |
| 2478.20.15.23.2020.500 | 500 |
| 2478.20.15.23.2020.550 | 550 |
| 2478.20.15.23.2020.600 | 600 |

2478.20.15.24.

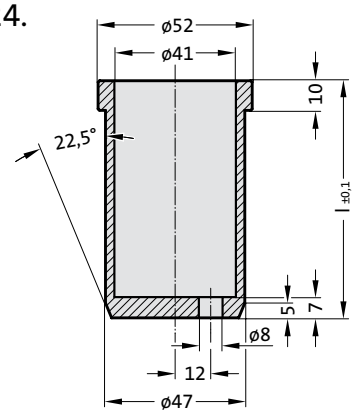


**Material:**
Steel

**Note:**
Holding sleeve 2478.20.15.24. can only be used for lifter 2478.20.15.20./30./40. ø 40 mm.

This is required when the panel is not thick enough (see installation example 2478.20.15.20./30./40.).

**2478.20.15.24.** **Holding sleeve**

| Order No | l |
|---|---|
| 2478.20.15.24.04.030 | 30 |
| 2478.20.15.24.04.040 | 40 |
| 2478.20.15.24.04.050 | 50 |
| 2478.20.15.24.04.060 | 60 |
| 2478.20.15.24.04.070 | 70 |
| 2478.20.15.24.04.080 | 80 |
| 2478.20.15.24.04.090 | 90 |
| 2478.20.15.24.04.100 | 100 |
| 2478.20.15.24.04.110 | 110 |
| 2478.20.15.24.04.120 | 120 |
| 2478.20.15.24.04.130 | 130 |
| 2478.20.15.24.04.140 | 140 |
| 2478.20.15.24.04.150 | 150 |
| 2478.20.15.24.04.160 | 160 |
| 2478.20.15.24.04.170 | 170 |
| 2478.20.15.24.04.180 | 180 |
| 2478.20.15.24.04.190 | 190 |
| 2478.20.15.24.04.200 | 200 |

# LIFTER UNIT WITH PILLAR GUIDANCE

**2478.25.00090.**

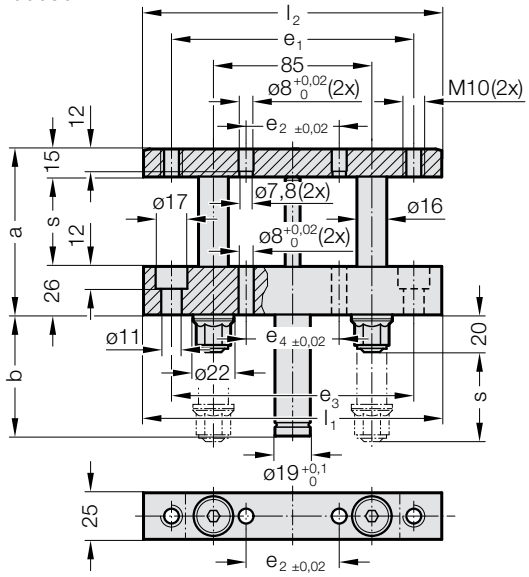


**Description:**
Filling pressure regulation and a composite arrangement are possible using the cylinder tube base. To attach the strip guide on the lifter rail, use the provided threads. We recommend designing the strip guide for a maximum material width of +0.4 mm (0.2 mm for each side) (View X). When several lifter units are used, only one unit per piece should be pinned in order to prevent redundancy.

**Note:**
The lifter unit is equipped with gas spring type 2482.74.00090, which cannot be repaired in case of wear and must therefore be exchanged completely.

Initial spring force: 90 daN
Pressure medium: Nitrogen $N_2$
Max. filling pressure: 180 bar
Min. filling pressure: 25 bar
Working temperature: 0°C to +80°C
Temperature related force increase: ± 0.3%/°C
Max. recommended extensions per minute:
approx. 40 to 100 (at 20°C)
Max. piston speed: see diagram
Max. usable stroke: 95%

Spring forces as per spring diagram in Chapter F - 2482.74.

**2478.25.00090. Lifter unit with pillar guidance**

| Order No | s Stroke max. | a | b | $l_1$ | $l_2$ | $e_1$ | $e_2$ | $e_3$ | $e_4$ | Spring force [daN] initial | Spring force [daN] final | Gas spring |
|---|---|---|---|---|---|---|---|---|---|---|---|---|
| 2478.25.00090.025 | 23 | 64 | 40 | 160 | 115 | 50 | 25 | 130 | 50 | 90 | 130 | 2482.74.00090.025.2 |
| 2478.25.00090.038 | 36 | 77 | 53 | 160 | 160 | 130 | 50 | 130 | 50 | 90 | 120 | 2482.74.00090.038.2 |
| 2478.25.00090.050 | 48 | 89 | 65 | 160 | 160 | 130 | 50 | 130 | 50 | 90 | 120 | 2482.74.00090.050.2 |
| 2478.25.00090.063 | 61.5 | 102.5 | 81.5 | 160 | 160 | 130 | 50 | 130 | 50 | 90 | 120 | 2482.74.00090.063.2 |
| 2478.25.00090.080 | 78 | 119 | 98 | 160 | 160 | 130 | 50 | 130 | 50 | 90 | 120 | 2482.74.00090.080.2 |
| 2478.25.00090.100 | 98 | 139 | 118 | 160 | 160 | 130 | 50 | 130 | 50 | 90 | 120 | 2482.74.00090.100.2 |
| 2478.25.00090.125 | 123 | 164 | 143 | 160 | 160 | 130 | 50 | 130 | 50 | 90 | 120 | 2482.74.00090.125.2 |
| 2478.25.00090.150 | 148 | 189 | 168 | 160 | 160 | 130 | 50 | 130 | 50 | 90 | 120 | 2482.74.00090.150.2 |

## 2478.25.00090.
## Max. load per lifter unit**

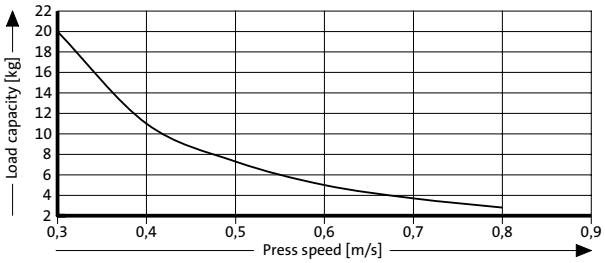


** Only recommended load capacity (per lifter unit) depending on the press speed. Provide an external stop in case of higher loads.

**Mounting example**

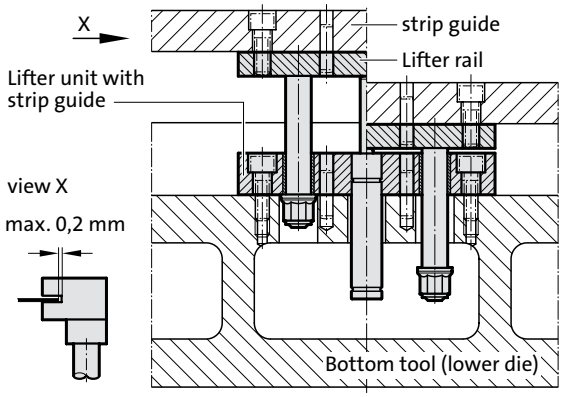

# LIFTER UNIT WITH PILLAR GUIDANCE

## 2478.25.00200.

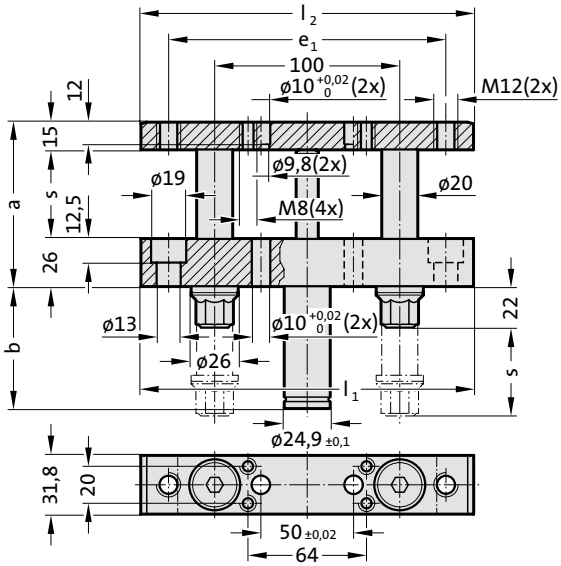

**Description:**
Filling pressure regulation and a composite arrangement are possible using the cylinder tube base. To attach the strip guide on the lifter rail, use the provided threads. We recommend designing the strip guide for a maximum material width of +0.4 mm (0.2 mm for each side) (View X). When several lifter units are used, only one unit per piece should be pinned in order to prevent redundancy.

**Note:**
The lifter unit is equipped with gas spring type 2480.21.00200.

Initial spring force: 200 daN
Pressure medium: Nitrogen $N_2$
Max. filling pressure: 180 bar

Min. filling pressure: 25 bar
Working temperature: 0°C to +80°C
Temperature related force increase: ± 0.3%/°C
Max. recommended extensions per minute:
approx. 80 to 100 (at 20°C)
Max. piston speed: see diagram
Max. usable stroke: 95%

Order No for spare parts kit: 2480.21.00150
Spring forces as per spring diagram in Chapter F - 2480.21.

### 2478.25.00200. Lifter unit with pillar guidance

| Order No | s Stroke max. | a | b | $l_1$ | $l_2$ | $e_1$ | Spring force [daN] initial | Spring force [daN] final | Gas spring |
|---|---|---|---|---|---|---|---|---|---|
| 2478.25.00200.025 | 23 | 64 | 41 | 180 | 140 | - | 200 | 308 | 2480.21.00200.025 |
| 2478.25.00200.038 | 36 | 77 | 54 | 180 | 180 | 150 | 200 | 309 | 2480.21.00200.038 |
| 2478.25.00200.050 | 48 | 89 | 66 | 180 | 180 | 150 | 200 | 309 | 2480.21.00200.050 |
| 2478.25.00200.063 | 61.5 | 102.5 | 82.5 | 180 | 180 | 150 | 200 | 302 | 2480.21.00200.063 |
| 2478.25.00200.080 | 78 | 119 | 99 | 180 | 180 | 150 | 200 | 304 | 2480.21.00200.080 |
| 2478.25.00200.100 | 98 | 139 | 119 | 180 | 180 | 150 | 200 | 305 | 2480.21.00200.100 |
| 2478.25.00200.125 | 123 | 164 | 144 | 180 | 180 | 150 | 200 | 306 | 2480.21.00200.125 |
| 2478.25.00200.150 | 148 | 189 | 177 | 180 | 180 | 150 | 200 | 300 | 2480.21.00200.150 |
| 2478.25.00200.175 | 173 | 214 | 202 | 180 | 180 | 150 | 200 | 298 | 2480.21.00200.175 |
| 2478.25.00200.200 | 198 | 239 | 227 | 180 | 180 | 150 | 200 | 297 | 2480.21.00200.200 |

**Mounting example**

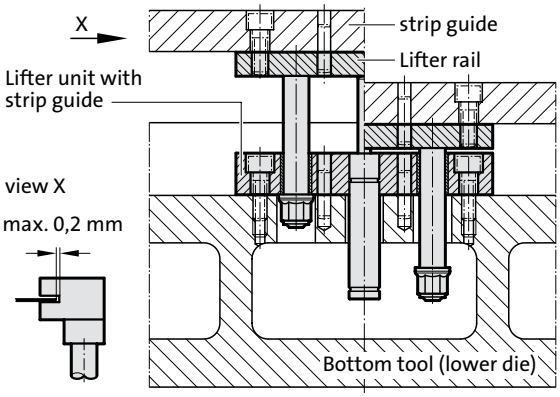


## 2478.25.00200.
## Max. load per lifter unit**

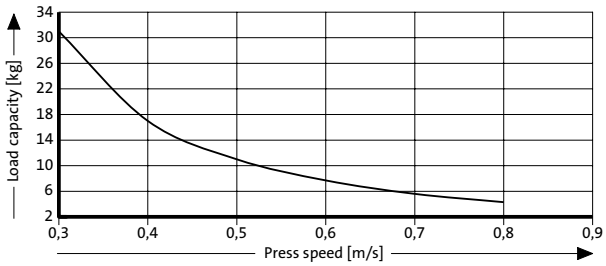


** Only recommended load capacity (per lifter unit) depending on the press speed. Provide an external stop in case of higher loads.

# SPRING RAM WITH GAS SPRING

**Mounting example**

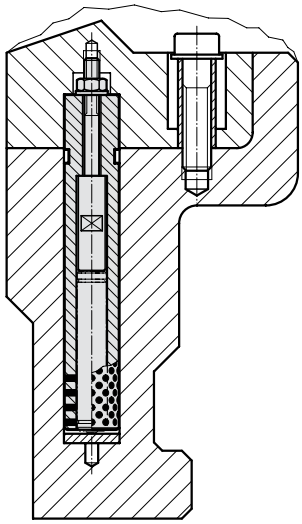

2478.

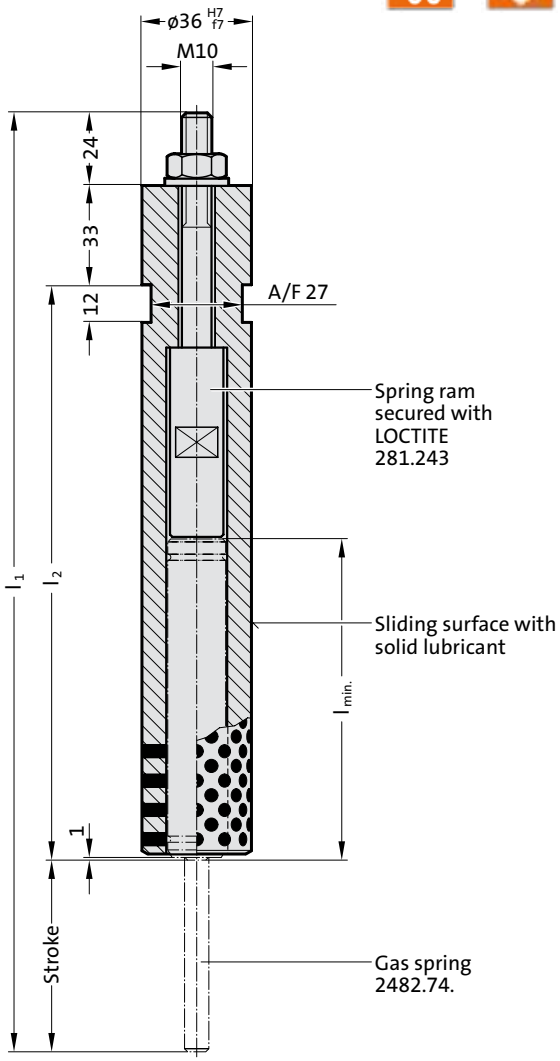


**Material:**
C45
induction hardened 58+4 HRC
Hardness penetration depth 0,8+0,4

Sliding surface with solid lubricant

**2478. Spring ram with gas spring**

| Order No | $Stroke_{max.}$ | $l_{min.}$ | $l_1$ | $l_2$ | Spring force [daN] initial | Spring force [daN] final | Gas spring |
|---|---|---|---|---|---|---|---|
| 2478.050.00030.1 | 50 | 92 | 257 | 150 | 30 | 40 | 2482.74.00030.050.2 |
| 2478.050.00050.1 | 50 | 92 | 257 | 150 | 50 | 67 | 2482.74.00050.050.2 |
| 2478.050.00070.1 | 50 | 92 | 257 | 150 | 70 | 94 | 2482.74.00070.050.2 |
| 2478.050.00090.1 | 50 | 92 | 257 | 150 | 90 | 120 | 2482.74.00090.050.2 |
| 2478.063.00030.1 | 63 | 109 | 310 | 190 | 30 | 40 | 2482.74.00030.063.2 |
| 2478.063.00050.1 | 63 | 109 | 310 | 190 | 50 | 67 | 2482.74.00050.063.2 |
| 2478.063.00070.1 | 63 | 109 | 310 | 190 | 70 | 94 | 2482.74.00070.063.2 |
| 2478.063.00090.1 | 63 | 109 | 310 | 190 | 90 | 120 | 2482.74.00090.063.2 |
| 2478.080.00030.1 | 80 | 125 | 360 | 223 | 30 | 40 | 2482.74.00030.080.2 |
| 2478.080.00050.1 | 80 | 125 | 360 | 223 | 50 | 67 | 2482.74.00050.080.2 |
| 2478.080.00070.1 | 80 | 125 | 360 | 223 | 70 | 94 | 2482.74.00070.080.2 |
| 2478.080.00090.1 | 80 | 125 | 360 | 223 | 90 | 120 | 2482.74.00090.080.2 |

# SPRING RAM WITH GAS SPRING TO VW STANDARD

2478.20. .1

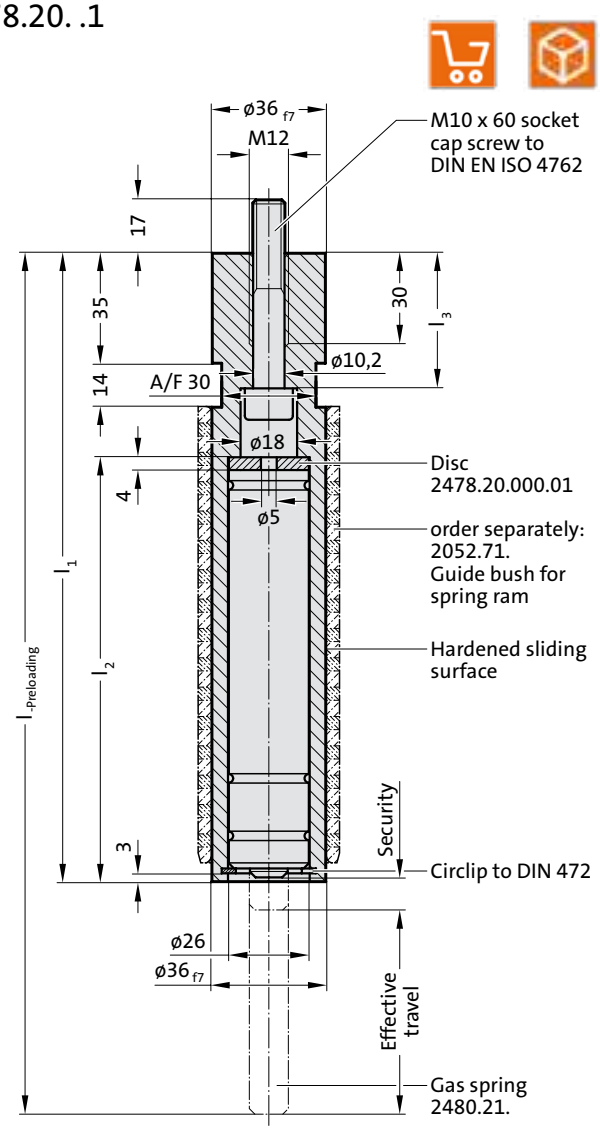


**Mounting example**

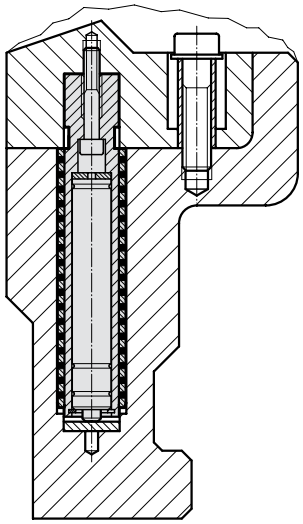

**Material:**

Spring ram: C45
induction hardened 58+4 HRC Hardness penetration depth 0,8+0,4

Disc: 90MnCrV8
hardened 56+4 HRC

**Note:**

Use only with matching guide bush 2052.71.!

Spring bolt installed preloaded.

**2478.20. .1 Spring ram with gas spring to VW standard**

| Order No | $Stroke_{max.}$ | l | $l_1$ | $l_2$ | $l_3$ | Spring force [daN] initial | Spring force [daN] final | Gas spring |
|---|---|---|---|---|---|---|---|---|
| 2478.20.050.00050.1 | 50 | 240 | 182 | 118 | 30 | 50 | 68 | 2480.21.00050.063 |
| 2478.20.050.00100.1 | 50 | 240 | 182 | 118 | 30 | 100 | 137 | 2480.21.00100.063 |
| 2478.20.050.00150.1 | 50 | 240 | 182 | 118 | 30 | 150 | 206 | 2480.21.00150.063 |
| 2478.20.050.00200.1 | 50 | 240 | 182 | 118 | 30 | 200 | 275 | 2480.21.00200.063 |
| 2478.20.065.00050.1 | 65 | 274 | 200 | 135 | 30 | 50 | 68 | 2480.21.00050.080 |
| 2478.20.065.00100.1 | 65 | 274 | 200 | 135 | 30 | 100 | 137 | 2480.21.00100.080 |
| 2478.20.065.00150.1 | 65 | 274 | 200 | 135 | 30 | 150 | 206 | 2480.21.00150.080 |
| 2478.20.065.00200.1 | 65 | 274 | 200 | 135 | 30 | 200 | 275 | 2480.21.00200.080 |
| 2478.20.080.00050.1 | 80 | 314 | 220 | 155 | 30 | 50 | 68 | 2480.21.00050.100 |
| 2478.20.080.00100.1 | 80 | 314 | 220 | 155 | 30 | 100 | 137 | 2480.21.00100.100 |
| 2478.20.080.00150.1 | 80 | 314 | 220 | 155 | 30 | 150 | 206 | 2480.21.00150.100 |
| 2478.20.080.00200.1 | 80 | 314 | 220 | 155 | 30 | 200 | 275 | 2480.21.00200.100 |

# GUIDE BUSH FOR SPRING RAM 2478.20. .1

2052.71.

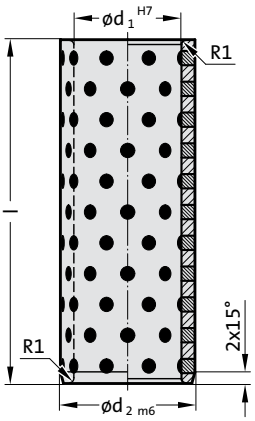


**Material:**
Bronze with solid lubricant, oilless lubricating

**Note:**
Recommended locating bore for bonding G7.

**2052.71.** **Guide bush for spring ram 2478.20. .1**

| Order No | $d_1$ | $d_2$ | l |
|---|---|---|---|
| 2052.71.036.045.115 | 36 | 45 | 115 |
| 2052.71.036.045.145 | 36 | 45 | 145 |
| 2052.71.036.045.170 | 36 | 45 | 170 |

# GAS SPRINGS

# GAS SPRING
# TWO-CHAMBER SYSTEM

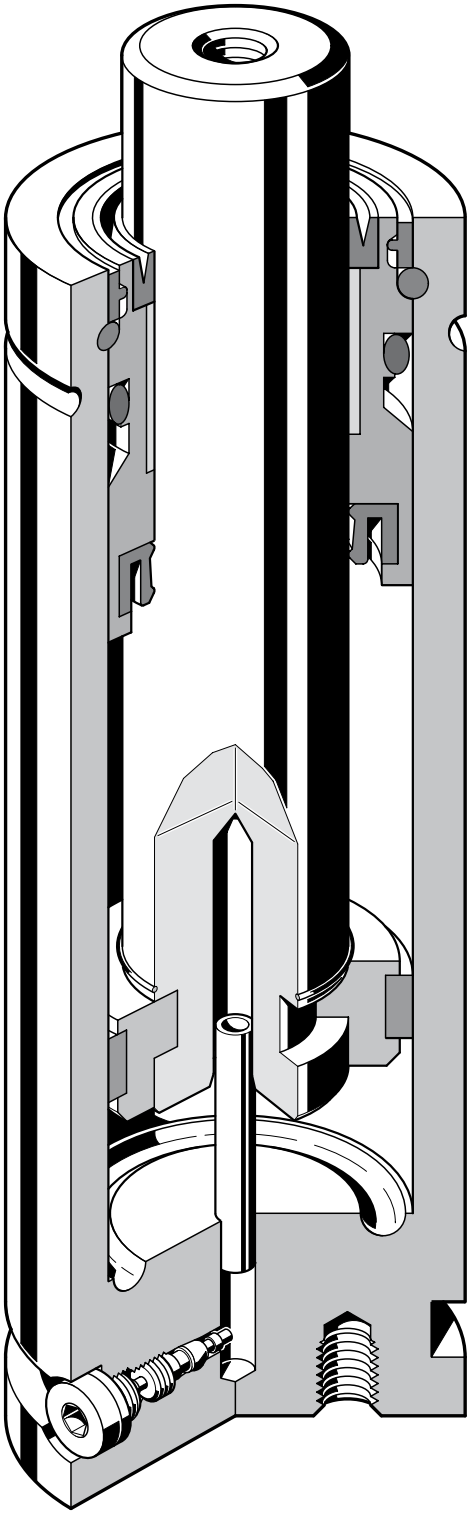

2480.12.

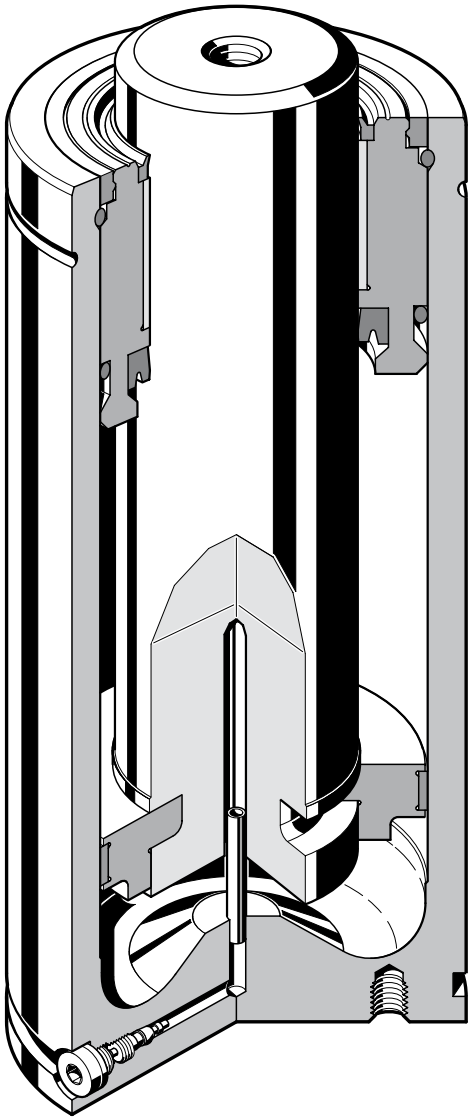

2480.13.

# GAS SPRING
# SINGLE-CHAMBER SYSTEM

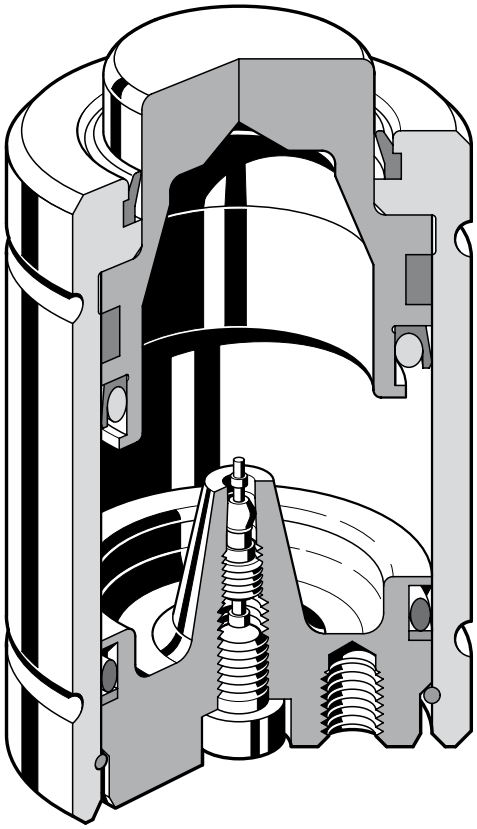

**2490.**

# GAS SPRINGS

### FIBRO Gas Springs

FIBRO Gas springs are an ideal supplement to and expansion of the traditional FIBRO product lines of helical, disc and elastomer springs for manufacturing tools, devices, moulds and machines.
FIBRO gas springs close a gap where ever the accent is on accommodation of the utmost force component within a minimum of space – or where exceedingly large travel is demanded: FIBRO Gas springs take care of both demands, even in combination.
FIBRO Gas springs are filled with nitrogen and do not require any pressure space that is positioned externally or in tool plates. They also require no gas supply lines.
In certain special cases, however, monitoring of charge pressure in the installed state is required. These may be found in the list of accessory products if needed.
As long as all mounting details are laid out with due circumspection, it is no problem at all to remove and install FIBRO Gas springs.
Operating instructions are included with every delivery of FIBRO Gas springs.
Application examples are shown on the following pages.

### Functioning

The pressure medium is a commercially available, environment-friendly nitrogen.
FIBRO gas springs have a standard charge pressure of max. 150 bar (180 bar).
Depending on the spring size and spring type, starting spring forces of 2 daN to 20000 daN can be realised.

### Pressure build-up

In operation the piston rod enters the spring space whose volume is progressively reduced. Depending on the stroke length, the volume of the pressure chamber is reduced. The resulting increase in pressure can be read from the diagram of the spring size as a factor. The final force is therefore the initial spring force 3 Pressure build-up factor.

### Operating temp.

The spring temperature should not exceed +80 °C.

### Charge pressure

Modification of charge pressure allows variation of the force rating and can be predetermined from the spring diagram.

### Installation recommendations

FIBRO gas springs can be used in any installation position. Whether or not external forces act on them when at rest is of no consequence.and can therefore be calculated easily.

## ALL FIBRO GAS SPRINGS MEET THE REQUIREMENTS OF THE PRESSURE EQUIPMENT DIRECTIVE 2014/68/EU

The Pressure Equipment Directive (2014/68/EU) was ratified by the European parliament and the Council of Europe in May 1997. The requirements of the pressure equipment directive came into force throughout the EU on 29 May 2002.
The directive defines pressure equipment as vessels, pipework, safety devices and pressure accessories. In terms of the directive a vessel is a casing which is designed and manufactured to contain fluids under pressure.
It follows from this definition that nitrogen gas springs of all sizes are deemed to be pressure vessels and must in this respect comply with the pressure equipment directive (2014/68/EU) from 29 May 2002.

# GAS SPRINGS

### Maintenance

FIBRO gas springs are designed for long-term maintenance-free operation. We recommend lightly oiling the piston rod before using.
Sealing and guide elements can be replaced easily in very little time.
They are available in a spare parts kit.
Each spare parts kit comes with detailed instructions for maintenance of Gas springs.

### Attention

When safety functions are triggered (overstroke, return stroke, or overpressure protection), the gas springs can no longer be repaired!

### Caution

Gas springs may only be charged with commercial grade 5.0 nitrogen gas.

### Accessories

The range of accessories for gas springs includes fastening devices, charging and control units, screw connections and lines for setting up compound systems.

FIBRO is not liable if fittings that are not original FIBRO fittings or fastening, accessory, and attachment parts that are not released by FIBRO are used.

### Warning signs

The signs should be affixed near the springs in as prominent a position as possible.

**WARNING**
This tool is equipped with
__ Gas Springs with a max. pressure of
150 or 180 bar, depending on spring type.
Working pressure _____ bar.
**Read maintenance instructions before working on gas springs.**
**FIBRO**
**Business Area Standard Parts**
D-74851 Hassmersheim · Postfach 1120
**T** +49 (0) 6266-73-0* · **F** +49 (0) 6266-73-237

**Size 35 x 50 mm**

| Language | Order No. |
|---|---|
| German | 2480.00.035.050.1 |
| English | 2480.00.035.050.2 |
| French | 2480.00.035.050.3 |
| Italian | 2480.00.035.050.4 |
| Spanish | 2480.00.035.050.5 |
| Polish | 2480.00.035.050.PL |
| Czech | 2480.00.035.050.CZ |
| Turkish | 2480.00.035.050.TR |
| Chinese | 2480.00.035.050.CN |

**WARNING**
This tool is equipped with ___ Gas Springs with a max. pressure of 150 or 180 bar, depending on spring type.

| No. pcs. | spring type | fill.press./bar | force/daN |
|---|---|---|---|
| 1 ___ | _____ | _____ | _____ |
| 2 ___ | _____ | _____ | _____ |
| 3 ___ | _____ | _____ | _____ |
| 4 ___ | _____ | _____ | _____ |
| 5 ___ | _____ | _____ | _____ |

Read maintenance instructions **before** working on gas springs.

**FIBRO**
**Business Area Standard Parts**
D-74851 Hassmersheim · Postfach 1120
**T** +49 (0) 6266-73-0* · **F** +49 (0) 6266-73-237

**Size 75x105 mm**

| Language | Order No. |
|---|---|
| German | 2480.00.075.105.1 |
| English | 2480.00.075.105.2 |
| French | 2480.00.075.105.3 |
| Italian | 2480.00.075.105.4 |
| Spanish | 2480.00.075.105.5 |
| Polish | 2480.00.075.105.PL |
| Czech | 2480.00.075.105.CZ |
| Turkish | 2480.00.075.105.TR |
| Chinese | 2480.00.075.105.CN |

**Size 110 x 150 mm**

| Language | Order No. |
|---|---|
| German | 2480.00.110.150.1 |
| English | 2480.00.110.150.2 |
| French | 2480.00.110.150.3 |
| Italian | 2480.00.110.150.4 |
| Spanish | 2480.00.110.150.5 |
| Polish | 2480.00.110.150.PL |
| Czech | 2480.00.110.150.CZ |
| Turkish | 2480.00.110.150.TR |
| Chinese | 2480.00.110.150.CN |

# GAS SPRINGS - INSTALLATION GUIDELINES

### Mounting examples

Mounting possibilities for gas springs are listed below.
For additional information on mounting, see the corresponding pages in the catalogue.

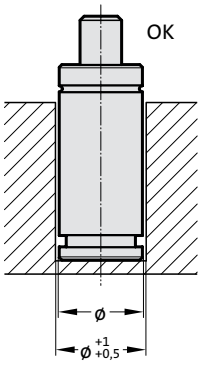


Installed loos in the bore.

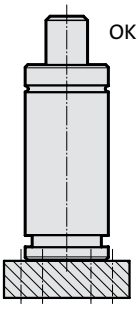


Screw mounted at tha base with 2480.011.

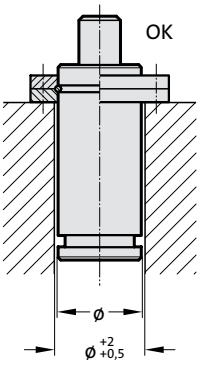


Fixed with 2480.055./057./058./064.

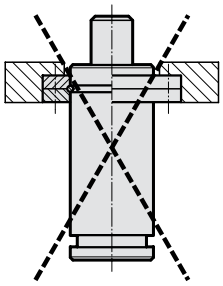

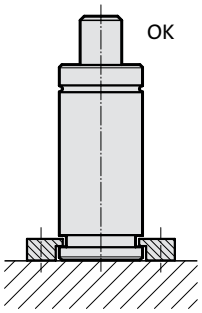


Fixed with 2480.007./008.

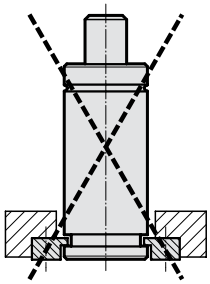

Fixed with 2480.007./008.

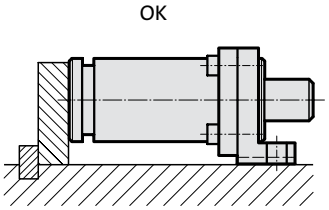


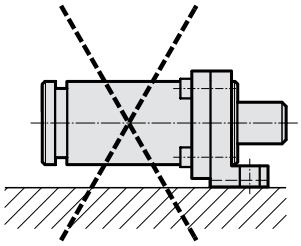

Fixed with 2480.044./045./047.

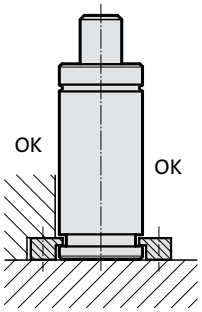


Fixed with 2480.022.

# GAS SPRINGS - INSTALLATION GUIDELINES

To achieve the best possible service-life and safety from the gas spring, the directions below must be followed.

**Mounting instructions**

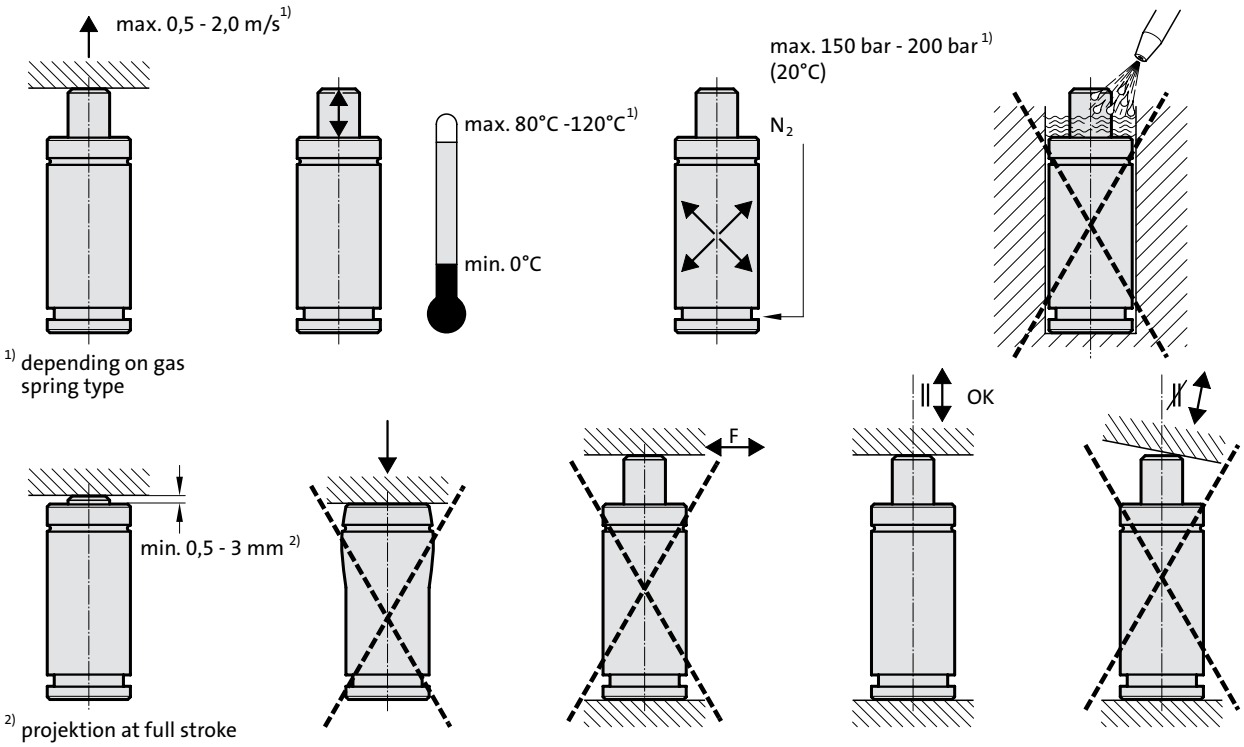


- Secure the gas spring to the tool/machine whenever possible, using the threaded hole(s) in the base of the gas spring or a suitable flange. Never exceed the maximum torque values for the threads in the base of the gas spring: (M6 = 10 Nm; M8 = 24 Nm; M10 = 45 Nm; M12 = 80 Nm)
- The threaded hole in the piston rod top should not be used for mounting purposes. It is only to be used when carrying and servicing the gas spring.
- Do not use the gas spring in such a way that the piston rod is realised freely from its compressed position, as this could cause internal damage to the gas spring.r).
- Make sure the gas spring is mounted parallel to the direction of the compression stroke.
- Ensure the contact surface of the piston rod top is perpendicular to the direction of the compression stroke and is sufficiently hardened.
- The gas spring should not be subjected to the side loads.
- Protect the piston rod against mechanical damage and contact with fluids.
- We recommend providing a stroke reserve of 10% of the nominal stroke length or 5 mm.
- The maximum charging pressure as a function of the working temperature must not be exceeded as it may effect the safety of the product.
- Exceeding the gas spring's recommended operating temperature will shorten the service-life of the gas spring.
- The entire contact surface of the piston rod / piston should be used.
- Do not remove bottom 2480./2497.00.20. from spring until all gas pressure has been discharged.

# FIBRO GAS SPRINGS – THE SAFER CHOICE
# OPTIMUM SAFETY FOR TOOLS AND OPERATORS

**At FIBRO, safety and reliability are paramount. Particularly when it comes to our gas springs. With their unique range of safety features, FIBRO gas springs are one of the safest on the market.**

## FIBRO safety features 1)

### PED approval for 2 million strokes

FIBRO gas springs are developed, manufactured and tested for a minimum of 2 million* full strokes in accordance with PED 2014/68/EU. The springs deliver this full performance at the maximum permissible limits in terms of filling pressure and operating temperature – even when combined with any of the various mounting types available.

* Calculation value for durability

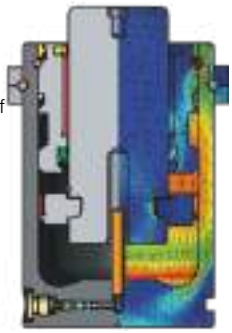

**The benefit for you:** ▶ **Guaranteed safety and reliability for the entire service life of the spring**

Repair kits and qualified training sessions available through FIBRO Service offer increased effectiveness and process reliability.

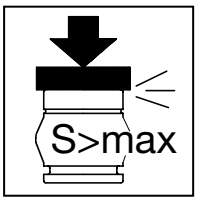


### Overstroke protection

Conventional gas springs may burst in the event of an over-extended stroke. Components may come loose and be ejected.

FIBRO gas springs are different:

in the event of an overstroke and depending on the spring type the patented protection system will ensure that either the cylinder wall of the gas spring is deformed in a predefined manner (A) or the piston rod destroys a rupture bolt in the floor of the cylinder (B), thereby allowing the gas to escape into the atmosphere.

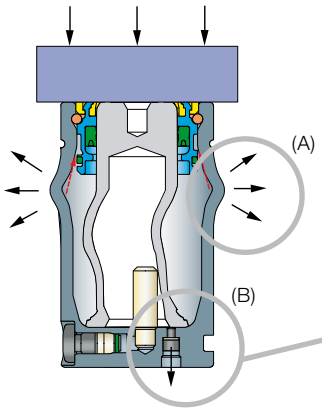

**The benefit for you:** ▶ **No risk of parts flying around in the event of an overstroke**

**Possible causes of triggering:** Lack of stroke limitations in the tool/machine and placing the piston rods under a load (e.g. sheet-metal holder, slide reset, etc.), double sheet, incorrect installation position, etc.

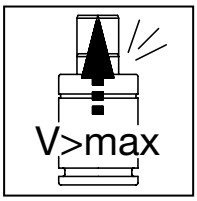


### Return stroke protection

If, for any reason, tool components should get stuck and the piston rod should be freely released from its compressed position, conventional gas springs may pose a safety risk as the piston may not be retained in the gas spring.

FIBRO gas springs are different:

special guides and a patented safety stop in the piston rods ensure your safety. If the speed is too high during the return stroke, the collar on the piston rod will automatically break. The integrated safety stop then destroys the seal, which allows the gas to escape into the atmosphere and the gas spring to become depressurised.

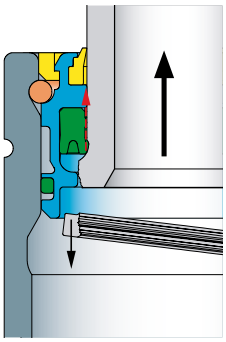

**The benefit for you:** ▶ **No risk of a piston rod firing out if the return stroke is too fast**

**Possible causes of triggering:** Sudden loosening of jammed components, such as sheet-metal holder, slide, ejector, scraper function, etc.

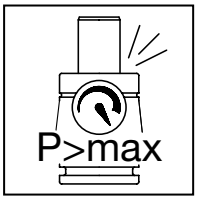


### Overpressure protection

Conventional gas springs can burst if the internal pressure rises above a maximum permitted value. If this happens, parts flying around can become dangerous projectiles.

FIBRO gas springs are different:

if the pressure rises above the maximum permitted value, the safety collar on the sealing set is automatically destroyed. The gas then escapes into the atmosphere and the gas spring is depressurised.

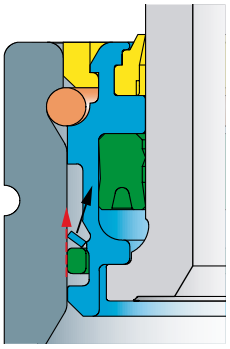

**The benefit for you:** ▶ **No risk of bursting parts in the event of overpressure**

**Possible causes of triggering:** Incorrect filling (max. filling pressure 150 or 180 bar, nitrogen), infeed of liquid operating material, etc.

After a protection function is triggered, the spring cannot be repaired and can no longer be used. It must be replaced completely.

1) The safety features mentioned here have been implemented – with few exceptions – on all FIBRO gas springs.

Please refer to the relevant data sheets to check the current safety equipment which is provided with the gas spring you are interested in, or contact FIBRO GmbH directly for more information. For the safe handling of gas springs and other nitrogen products, the safety regulations must be observed. Maintenance work on the product may only be done, if nitrogen gas is no longer contained in the gas spring.

# FIBRO GAS SPRINGS – THE SAFER CHOICE
# OPTIMUM SAFETY FOR TOOLS AND OPERATORS

## FIBRO reliability features

Flexible guides: The Flex Guide™ System

The Flex Guide™ System is a flexible guide in the gas spring which absorbs lateral movements of the piston rod. It minimises friction and lowers the operating temperature.

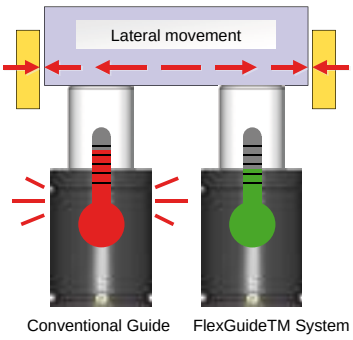


**The benefits for you:**

- **Extended service life**
- **Increased stroke frequency, i.e. more strokes per minute**

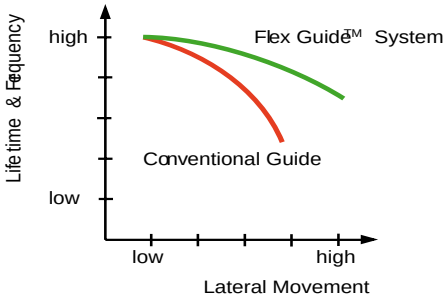


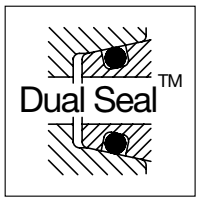


Safe hose connections: The Dual Seal™ System

The FIBRO Dual Seal™ System combines a metal seal with a soft elastomer seal. On hose connection systems, the system provides two leak-tight connections and prevents rotation.

**The benefits for you:**

- **Leak-tight connection, even under vibrations**
- **High process reliability**
- **Minimised tool down time**
- **Simple installation thanks to anti-rotation function**

**Wireless monitoring:**

**The Wireless Pressure Monitoring (WPM) System**

The optional Wireless Pressure Monitoring System (WPM) (patent pending) wirelessly monitors the pressure and temperature of FIBRO gas springs. Before a defective part is produced, the press operator receives a message from the WPM and can take appropriate action.

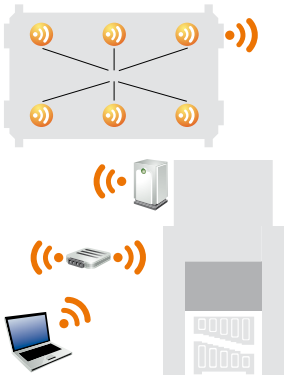

**The benefits for you:**

- **Preventative quality assurance**
- **High process reliability**
- **Minimised tool down time**
- **Reduced maintenance and costs**

Potential faults are individually displayed. As a result, service intervals can be extended. Maintenance and repair costs are reduced.

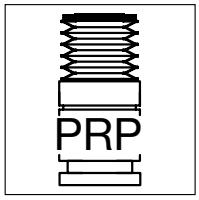


**Protected piston rods: FIBRO Concertina Shrouds**

The FIBRO Piston Rod Protection (patented) reliably protects the piston rods in gas springs against dirt, oil and emulsion. In this way, the system prevents damage to the piston rod surface and leaks at internal seals.

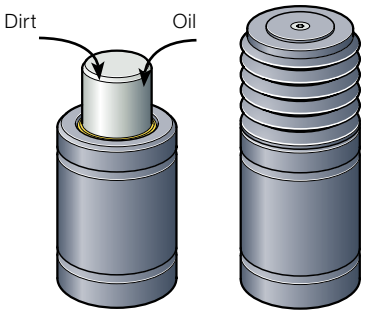


**The benefit for you:**

- **Significantly longer service life for gas springs under harsh operating conditions**

# GAS SPRINGS - SYNOPSIS

| Nominal force in daN | Outside-∅ in mm | Stroke in mm | Built-in lenght in mm | Standard | Note | Order No. |
|---|---|---|---|---|---|---|
| **Gas springs, Ejector pin units** | | | | | | |
| 5 | M16x1,5 | 10 - 125 | 65 - 295 | VDI | | 2479.030.00005. |
| 10 | M16x1,5 | 10 - 125 | 65 - 295 | VDI | | 2479.030.00010. |
| 20 | M16x1,5 | 10 - 125 | 65 - 295 | VDI | | 2479.030.00020. |
| 40 | M16x1,5 | 10 - 125 | 65 - 295 | VDI | | 2479.030.00040. |
| 4 | M16x2 | 10 - 125 | 65 - 295 | VDI | | 2479.031.00004. |
| 5 | M16x2 | 10 - 125 | 65 - 295 | VDI | | 2479.031.00005. |
| 10 | M16x2 | 10 - 125 | 65 - 295 | VDI | | 2479.031.00010. |
| 20 | M16x2 | 10 - 125 | 65 - 295 | VDI | | 2479.031.00020. |
| 40 | M16x2 | 10 - 125 | 65 - 295 | VDI | | 2479.031.00040. |
| 20 | M24x1,5 | 10 - 125 | 65 - 295 | VDI | | 2479.032.00020. |
| 40 | M24x1,5 | 10 - 125 | 65 - 295 | VDI | | 2479.032.00040. |
| 80 | M24x1,5 | 10 - 125 | 65 - 295 | VDI | | 2479.032.00080. |
| 170 | M24x1,5 | 10 - 125 | 65 - 295 | VDI | | 2479.032.00170. |
| 20 | M24x1,5 | 10 - 125 | 65 - 295 | WDX | | 2479.034.00020. |
| 40 | M24x1,5 | 10 - 125 | 65 - 295 | WDX | | 2479.034.00040. |
| 80 | M24x1,5 | 10 - 125 | 65 - 295 | WDX | | 2479.034.00080. |
| 170 | M24x1,5 | 10 - 125 | 65 - 295 | WDX | | 2479.034.00170. |
| **Gas springs, small dimensions** | | | | | | |
| 13 | 12 | 7 - 125 | 56 - 295 | | | 2482.72.00013. |
| 25 | 12 | 7 - 125 | 56 - 295 | | | 2482.72.00025. |
| 38 | 12 | 7 - 125 | 56 - 295 | | | 2482.72.00038. |
| 50 | 12 | 7 - 125 | 56 - 295 | | | 2482.72.00050. |
| 18 | 15 | 7 - 125 | 56 - 295 | | | 2482.73.00018.1 |
| 35 | 15 | 7 - 125 | 56 - 295 | | | 2482.73.00035.1 |
| 50 | 15 | 7 - 125 | 56 - 295 | | | 2482.73.00050.1 |
| 70 | 15 | 7 - 125 | 56 - 295 | | | 2482.73.00070.1 |
| 30 | 19 | 7 - 125 | 56 - 295 | VDI, ISO | | 2482.74.00030.2 |
| 50 | 19 | 7 - 125 | 56 - 295 | VDI, ISO | | 2482.74.00050.2 |
| 70 | 19 | 7 - 125 | 56 - 295 | VDI, ISO | | 2482.74.00070.2 |
| 90 | 19 | 7 - 125 | 56 - 295 | VDI, ISO | | 2482.74.00090.2 |
| 50 | 24,9 | 10 - 125 | 62 - 295 | VDI, ISO | | 2480.21.00050. |
| 100 | 24,9 | 10 - 125 | 62 - 295 | VDI, ISO | | 2480.21.00100. |
| 150 | 24,9 | 10 - 125 | 62 - 295 | VDI, ISO | | 2480.21.00150. |
| 200 | 24,9 | 10 - 125 | 62 - 295 | VDI, ISO | | 2480.21.00200. |
| 50 | 32 | 10 - 125 | 70 - 300 | VDI, ISO | | 2480.22.00050.1 |
| 100 | 32 | 10 - 125 | 70 - 300 | VDI, ISO | | 2480.22.00100.1 |
| 150 | 32 | 10 - 125 | 70 - 300 | VDI, ISO | | 2480.22.00150.1 |
| 200 | 32 | 10 - 125 | 70 - 300 | VDI, ISO | | 2480.22.00200.1 |
| | 24,9 | 10 - 125 | 62 - 295 | | | 2480.23. |
| **Standard-Gas springs** | | | | | | |
| 250 | 38 | 10 - 125 | 70 - 300 | VDI, ISO | | 2480.13.00250. |
| 500 | 45,2 | 10 - 160 | 105 - 405 | VDI, ISO | | 2480.13.00500. |
| 750 | 50,2 | 13 - 300 | 120,4 - 695 | VDI, ISO | | 2480.13.00750. |
| 1500 | 75,2 | 13 - 300 | 135 - 710 | VDI, ISO | | 2480.12.01500. |
| 3000 | 95,2 | 13 - 300 | 145 - 720 | VDI, ISO | | 2480.13.03000. |
| 5000 | 120,2 | 25 - 300 | 190 - 740 | VDI, ISO | | 2480.13.05000. |
| 7500 | 150,2 | 25 - 300 | 205 - 755 | VDI, ISO | | 2480.13.07500. |
| 10000 | 195 | 25 - 300 | 210 - 760 | VDI, ISO | | 2480.12.10000. |
| **Standard-Gas springs – HEAVY DUTY** | | | | | | |
| 750 | 45,2 | 13 - 200 | 111 - 485 | | | 2488.13.00750 |
| 1000 | 50,2 | 13 - 300 | 121 - 695 | VDI, ISO | | 2488.13.01000. |
| 1500 | 63,2 | 13 - 300 | 121 - 695 | | | 2488.13.01500 |
| 2400 | 75,2 | 25 - 300 | 160 - 710 | VDI, ISO | | 2488.13.02400. |
| 4200 | 95,2 | 25 - 300 | 170 - 720 | VDI, ISO | | 2488.13.04200. |
| 6600 | 120,2 | 25 - 300 | 190 - 740 | VDI, ISO | | 2488.13.06600. |
| 9500 | 150,2 | 25 - 300 | 205 - 755 | VDI, ISO | | 2488.13.09500. |
| 20000 | 195 | 25 - 300 | 210 - 760 | | | 2488.13.20000 |
| **Gas springs with through bore passage** | | | | | | |
| 270 | 38 | 16 - 80 | 108 - 236 | | | 2496.12.00270. |
| 490 | 50,2 | 16 - 80 | 112 - 240 | | | 2496.12.00490. |
| 1060 | 75,2 | 16 - 100 | 122 - 290 | | | 2496.12.01060. |

# GAS SPRINGS - SYNOPSIS

| Nominal force in daN | Outside-∅ in mm | Stroke in mm | Built-in lenght in mm | Standard | Note | Order No. |
|---|---|---|---|---|---|---|
| **Gas springs with increased spring force – POWERLINE** | | | | | | |
| 170 | 19 | 7 - 125 | 44 - 285 | VDI, ISO | | 2487.12.00170. |
| 320 | 24,9 | 7 - 125 | 44 - 285 | ISO | | 2487.12.00320. |
| 350 | 32 | 10 - 125 | 50 - 280 | VDI, ISO | | 2487.12.00350. |
| 500 | 38 | 10 - 125 | 50 - 280 | VDI, ISO | | 2487.12.00500. |
| 750 | 45,2 | 10 - 125 | 52 - 282 | VDI, ISO | | 2487.12.00750. |
| 1000 | 50,2 | 13 - 125 | 64 - 288 | VDI, ISO | | 2487.12.01000. |
| 1500 | 63,2 | 13 - 125 | 70 - 294 | VDI, ISO | | 2487.12.01500. |
| 2400 | 75,2 | 16 - 125 | 77 - 295 | VDI, ISO | | 2487.12.02400. |
| 4200 | 95,2 | 16 - 125 | 90 - 308 | VDI, ISO | | 2487.12.04200. |
| 6600 | 120,2 | 16 - 125 | 100 - 318 | VDI, ISO | | 2487.12.06600. |
| 9500 | 150,2 | 19 - 125 | 116 - 328 | VDI, ISO | | 2487.12.09500. |
| 20000 | 195 | 19 - 125 | 148 - 360 | | | 2487.12.20000. |
| **Gas springs CX, Compact Xtreme** | | | | | | |
| 500 | 32 | 10 - 80 | 75 - 225 | | | 2497.12.00500. |
| 1000 | 38 | 10 - 80 | 75 - 240 | | | 2497.12.01000. |
| 1900 | 50,2 | 10 - 80 | 80 - 245 | | | 2497.12.01900. |
| **Compact-Gas springs** | | | | | | |
| 420 | 24,9 | 6 - 50 | 56 - 195 | | | 2490.14.00420. |
| 750 | 32 | 6 - 50 | 63 - 195 | | | 2490.14.00750. |
| 1000 | 38 | 6 - 50 | 61 - 230 | | | 2490.14.01000. |
| 1800 | 50,2 | 6 - 65 | 66 - 271 | | | 2490.14.01800. |
| 3000 | 63,2 | 10 - 65 | 85 - 256 | | | 2490.14.03000. |
| 4700 | 75,2 | 10 - 65 | 80 - 273 | | | 2490.14.04700. |
| 7500 | 95,2 | 10 - 65 | 90 - 279 | | | 2490.14.07500. |
| 11800 | 120,2 | 10 - 65 | 100 - 320 | | | 2490.14.11800. |
| 18300 | 150,2 | 10 - 65 | 110 - 323 | | | 2490.14.18300. |
| **Gas springs low build height** | | | | | | |
| 500 | 45,2 | 6 - 125 | 62 - 300 | | | 2485.12.00500. |
| 750 | 50,2 | 6 - 125 | 62 - 300 | | | 2485.12.00750. |
| 1500 | 75,2 | 25 - 100 | 110 - 260 | | | 2485.12.01500. |
| **Gas springs SPC - SPEED CONTROL™, cushioned** | | | | | | |
| 750 | 75,2 | 125 - 300 | 360 -710 | | | 2486.12.00750. |
| 1500 | 95,2 | 125 - 300 | 370 -720 | | | 2486.12.01500. |
| 3000 | 120,2 | 125 - 300 | 390 -740 | | | 2486.12.03000. |
| 5000 | 150,2 | 125 - 300 | 405 -755 | | | 2486.12.05000. |
| **Gas springs DS for die separation** | | | | | | |
| 3000 | 95,2 | 80 - 300 | 280 - 720 | | | 2486.22.03000. |
| 5000 | 120,2 | 80 - 300 | 300 - 740 | | | 2486.22.05000. |
| 7500 | 150,2 | 80 - 300 | 315 - 755 | | | 2486.22.07500. |
| **Gas springs to WDX Standard / request your catalogue** | | | | | | |
| **Gas springs, threaded** | | | | | | |
| 50 - 200 | M28×1,5 | 10 - 125 | 62 - 292 | | external thread | 2480.32.00050.-00200. |
| 250 | M38×1,5 | 13 - 100 | 75,4 - 250 | | external thread | 2480.32.00250. |
| 250 | 38 | 13 - 100 | 75,4 - 250 | | with male fixing thread | 2480.82.00250. |
| 1000 | 50,2 | 13 - 125 | 64 - 288 | | with male fixing thread | 2487.82.01000. |
| 15 | M28×1,5 | 125 | 292 | | with hexagonal flange | 2480.33.00015.125 |
| 50 | M28×1,5 | 125 | 292 | | with hexagonal flange | 2480.33.00050.125 |
| 100 | M28×1,5 | 125 | 292 | | with hexagonal flange | 2480.33.00100.125 |
| 150 | M28×1,5 | 125 | 292 | | with hexagonal flange | 2480.33.00150.125 |
| 200 | M28×1,5 | 125 | 292 | | with hexagonal flange | 2480.33.00200.125 |
| **Gas springs for working temperatures up to 120°C** | | | | | | |

# GAS SPRINGS - SYNOPSIS

| Nominal force in daN | Outside-∅ in mm | Stroke in mm | Built-in lenght in mm | Standard | Note | Order No. |
|---|---|---|---|---|---|---|
| **LCF Gas springs, damped** | | | | | | |
| 750 | 50,2 | 13 - 300 | 120,4 - 695 | | | 2484.13.00750. |
| 1500 | 75,2 | 25 - 300 | 160 - 710 | | | 2484.12.01500. |
| 3000 | 95,2 | 25 - 300 | 170 - 720 | | | 2484.13.03000. |
| 5000 | 120,2 | 25 - 300 | 190 - 740 | | | 2484.13.05000. |
| 7500 | 150,2 | 25 - 300 | 205 - 755 | | | 2484.13.07500. |

**Controllable gas springs / request your catalogue** **2489.**

**Air Springs, to VW standard / request your catalogue** **2491.**

**Manifold systems / request your catalogue** **2495.**

**Composite plates / request your catalogue** **2494.**

# GAS SPRINGS (SPRING-LOADED THRUST PIECES)

# GAS SPRING (SPRING PLUNGER), WITH HEXAGON SOCKET, VDI 3004

2479.030.

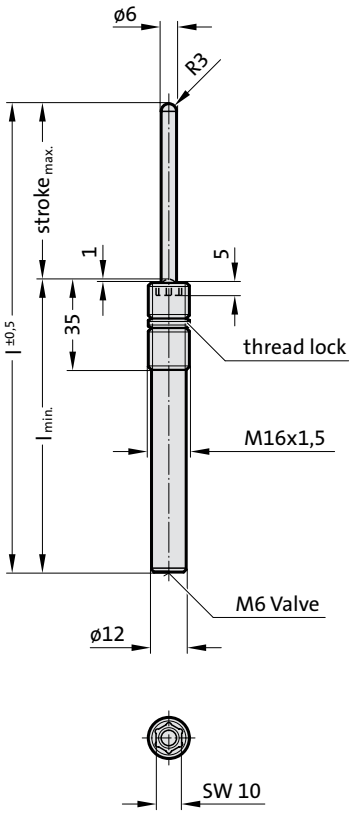


**Description:**
Spring plungers are used as ejectors, damper pins, fixing and retaining pins in many sectors of the tool-, jig- and fixture-making industries. Assembly requires the use of special FIBRO insertion tool (2470.12.010.017).

**Note:**
Worn gas springs cannot be repaired, they have to be replaced completely.

Pressure medium: Nitrogen - $N_2$
Max. filling pressure: 150 bar
Min. filling pressure: 6 bar
Working temperature: 0°C to +80°C
Temperature related force increase: ± 0.3%/°C
Max. recommended extensions per minute: approx. 100 (at 20°C)
Max. piston speed: 1.6 m/s

Upon customers request, also available unfilled, Order No 2479.030.00000...., Colour: black

2) Hexagon nut order supplementary: 2479.004.016.15 (M16 x 1,5)

APPROVED PED 2014/68/EU | VDI | V>max | P>max

**2479.030. Gas spring (Spring plunger), with hexagon socket, VDI 3004**

| Spring type: | | | | .00005. | | .00010. | | .00020. | | .00040. | |
|---|---|---|---|---|---|---|---|---|---|---|---|
| Order No* | $Stroke_{max.}$ | l | $l_{min.}$ | $F_{initial}$ [daN] | $F_{final}$ [daN] | $F_{initial}$ [daN] | $F_{final}$ [daN] | $F_{initial}$ [daN] | $F_{final}$ [daN] | $F_{initial}$ [daN] | $F_{final}$ [daN] |
| 2479.030.□□□□□.010 | 10 | 65 | 55 | 6 | 10.3 | 11 | 19 | 21 | 36.1 | 42 | 73 |
| 2479.030.□□□□□.020 | 20 | 85 | 65 | 6 | 9.4 | 11 | 17.2 | 21 | 32.8 | 42 | 66.1 |
| 2479.030.□□□□□.030 | 30 | 105 | 75 | 6 | 9.1 | 11 | 16.7 | 21 | 31.9 | 42 | 64.5 |
| 2479.030.□□□□□.040 | 40 | 125 | 85 | 6 | 9 | 11 | 16.5 | 21 | 31.5 | 42 | 63.7 |
| 2479.030.□□□□□.050 | 50 | 145 | 95 | 6 | 9.6 | 11 | 17.6 | 21 | 33.6 | 42 | 67.7 |
| 2479.030.□□□□□.060 | 60 | 165 | 105 | 6 | 9.4 | 11 | 17.3 | 21 | 33 | 42 | 66.5 |
| 2479.030.□□□□□.070 | 70 | 185 | 115 | 6 | 9.3 | 11 | 17 | 21 | 32.5 | 42 | 65.7 |
| 2479.030.□□□□□.080 | 80 | 205 | 125 | 6 | 9.2 | 11 | 16.8 | 21 | 32.1 | 42 | 65.1 |
| 2479.030.□□□□□.100 | 100 | 245 | 145 | 6 | 9.1 | 11 | 16 | 21 | 31.9 | 42 | 64.3 |
| 2479.030.□□□□□.125 | 125 | 295 | 170 | 6 | 9 | 11 | 16.5 | 21 | 31.5 | 42 | 63.8 |

complete with spring type
Spring force marking:
Spring type - Pressure [bar] - Colour:
.00005. - 20 - green
.00010. - 40 - blue
.00020. - 75 - red
.00040. - 150 - yellow

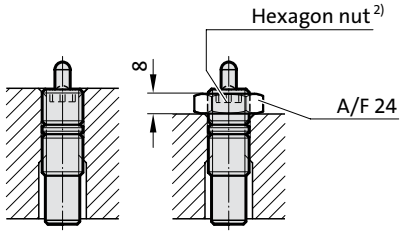


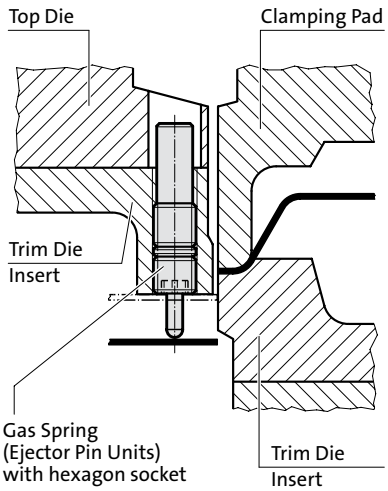

# GAS SPRING (SPRING PLUNGER), WITH HEXAGON SOCKET, VDI 3004

**Description:**
Spring plungers are used as ejectors, damper pins, fixing and retaining pins in many sectors of the tool-, jig- and fixture-making industries. Assembly requires the use of special FIBRO insertion tool (2470.12.010.017).

**Note:**
Worn gas springs cannot be repaired, they have to be replaced completely.

Pressure medium: Nitrogen - $N_2$
Max. filling pressure: 150 bar
Min. filling pressure: 6 bar
Working temperature: 0°C to +80°C
Temperature related force increase: ± 0.3%/°C
Max. recommended extensions per minute: approx. 100 (at 20°C)
Max. piston speed: 1.6 m/s

Upon customers request, also available unfilled, Order No 2479.031.00000...., Colour: black

2) Hexagon nut order supplementary: 2479.004.016.20 (M16 x 2)

2479.031.

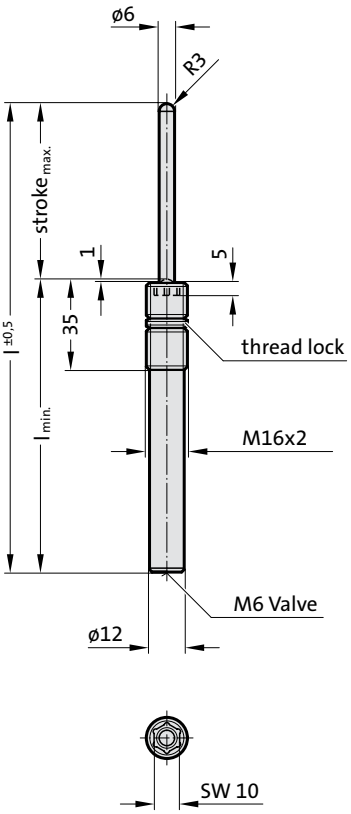

APPROVED PED 2014/68/EU | VDI

V>max | P>max

**2479.031. Gas spring (Spring plunger), with hexagon socket, VDI 3004**

| Spring type: | | | | .00004. | | .00005. | | .00010. | | .00020. | | .00040. | |
|---|---|---|---|---|---|---|---|---|---|---|---|---|---|
| Order No* | Stroke$_{max.}$ | l | l$_{min.}$ | F$_{initial}$ [daN] | F$_{final}$ [daN] | F$_{initial}$ [daN] | F$_{final}$ [daN] | F$_{initial}$ [daN] | F$_{final}$ [daN] | F$_{initial}$ [daN] | F$_{final}$ [daN] | F$_{initial}$ [daN] | F$_{final}$ [daN] |
| 2479.031.□□□□□.010 | 10 | 65 | 55 | 3.4 | 6 | 6 | 10.3 | 11 | 19 | 21 | 36.1 | 42 | 73 |
| 2479.031.□□□□□.020 | 20 | 85 | 65 | 3.4 | 5.2 | 6 | 9.4 | 11 | 17.2 | 21 | 32.8 | 42 | 66.1 |
| 2479.031.□□□□□.030 | 30 | 105 | 75 | 3.4 | 5.2 | 6 | 9.1 | 11 | 16.7 | 21 | 31.9 | 42 | 64.5 |
| 2479.031.□□□□□.040 | 40 | 125 | 85 | 3.4 | 5.2 | 6 | 9 | 11 | 16.5 | 21 | 31.5 | 42 | 63.7 |
| 2479.031.□□□□□.050 | 50 | 145 | 95 | 3.4 | 5.4 | 6 | 9.6 | 11 | 17.6 | 21 | 33.6 | 42 | 67.7 |
| 2479.031.□□□□□.060 | 60 | 165 | 105 | 3.4 | 5.4 | 6 | 9.4 | 11 | 17.3 | 21 | 33 | 42 | 66.5 |
| 2479.031.□□□□□.070 | 70 | 185 | 115 | 3.4 | 5.4 | 6 | 9.3 | 11 | 17 | 21 | 32.5 | 42 | 65.7 |
| 2479.031.□□□□□.080 | 80 | 205 | 125 | 3.4 | 5.2 | 6 | 9.2 | 11 | 16.8 | 21 | 32.1 | 42 | 65.1 |
| 2479.031.□□□□□.100 | 100 | 245 | 145 | 3.4 | 5.2 | 6 | 9.1 | 11 | 16 | 21 | 31.9 | 42 | 64.3 |
| 2479.031.□□□□□.125 | 125 | 295 | 170 | 3.4 | 5.2 | 6 | 9 | 11 | 16.5 | 21 | 31.5 | 42 | 63.8 |

*complete with spring type
Spring force marking:
Spring type - Pressure [bar] - Colour:
.00004. - 12 - violet
.00005. - 20 - green
.00010. - 40 - blue
.00020. - 75 - red
.00040. - 150 - yellow

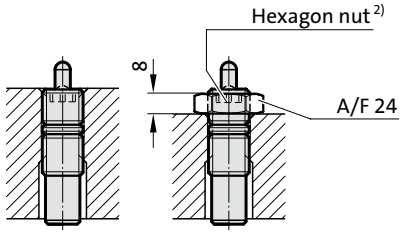


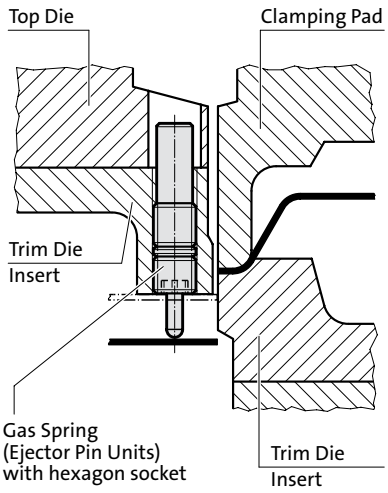

# GAS SPRING (SPRING PLUNGER), WITH HEXAGON SOCKET, VDI 3004

2479.032.

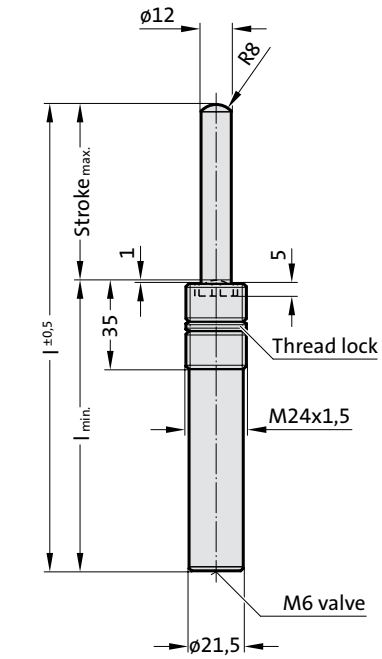


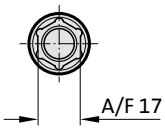


APPROVED PED 2014/68/EU

VDI

V>max

**Description:**
Spring plungers are used as ejectors, damper pins, fixing and retaining pins in many sectors of the tool-, jig- and fixture-making industries. Assembly requires the use of special FIBRO insertion tool (2470.12.010.017).

**Note:**
Worn gas springs cannot be repaired, they have to be replaced completely.

Pressure medium: Nitrogen - $N_2$
Max. filling pressure: 150 bar
Min. filling pressure: 20 bar
Working temperature: 0°C to +80°C
Temperature related force increase: ± 0.3%/°C
Max. recommended extensions per minute: approx. 100 (at 20°C)
Max. piston speed: 1.6 m/s

Upon customers request, also available unfilled, Order No 2479.032.00000...., Colour: black

[2)] Hexagon nut order supplementary: 2479.004.024.15

**2479.032. Gas spring (Spring plunger), with hexagon socket, VDI 3004**

| Spring type: | | | | .00020. | | .00040. | | .00080. | | .00170. | |
|---|---|---|---|---|---|---|---|---|---|---|---|
| Order No* | $Stroke_{max.}$ | l | $l_{min.}$ | $F_{initial}$ [daN] | $F_{final}$ [daN] | $F_{initial}$ [daN] | $F_{final}$ [daN] | $F_{initial}$ [daN] | $F_{final}$ [daN] | $F_{initial}$ [daN] | $F_{final}$ [daN] |
| 2479.032.□□□□□.010 | 10 | 65 | 55 | 23 | 33.1 | 45 | 64.8 | 85 | 122.4 | 170 | 244.8 |
| 2479.032.□□□□□.020 | 20 | 85 | 65 | 23 | 36.3 | 45 | 71.1 | 85 | 134.3 | 170 | 256.6 |
| 2479.032.□□□□□.030 | 30 | 105 | 75 | 23 | 38.2 | 45 | 74.7 | 85 | 141.1 | 170 | 282.2 |
| 2479.032.□□□□□.040 | 40 | 125 | 85 | 23 | 39.3 | 45 | 46.9 | 85 | 145.4 | 170 | 290.7 |
| 2479.032.□□□□□.050 | 50 | 145 | 95 | 23 | 42.5 | 45 | 83.2 | 85 | 157.3 | 170 | 314.5 |
| 2479.032.□□□□□.060 | 60 | 165 | 105 | 23 | 42.5 | 45 | 83.2 | 85 | 157.3 | 170 | 314.5 |
| 2479.032.□□□□□.070 | 70 | 185 | 115 | 23 | 42.8 | 45 | 83.7 | 85 | 158.1 | 170 | 316.2 |
| 2479.032.□□□□□.080 | 80 | 205 | 125 | 23 | 42.8 | 45 | 83.7 | 85 | 158.1 | 170 | 316.2 |
| 2479.032.□□□□□.100 | 100 | 245 | 145 | 23 | 43 | 45 | 84.1 | 85 | 159 | 170 | 318 |
| 2479.032.□□□□□.125 | 125 | 295 | 170 | 23 | 43 | 45 | 84.1 | 85 | 159 | 170 | 318 |

*complete with spring type
Spring force marking:
Spring type - Pressure [bar] - Colour:
.00020. - 20 - green
.00040. - 40 - blue
.00080. - 75 - red
.00170. - 150 - yellow

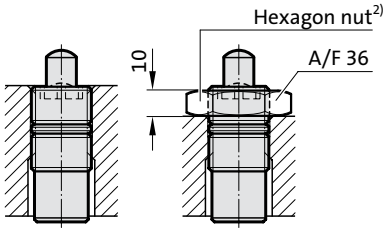


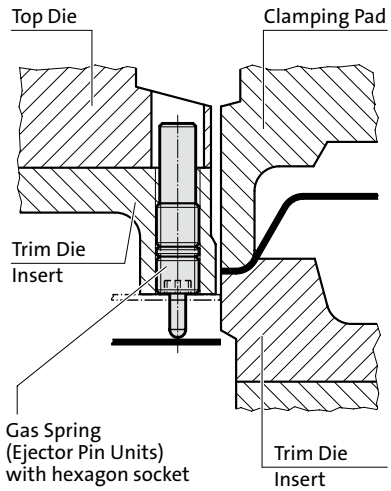

# GAS SPRING (SPRING PLUNGER), TO WDX

**Description:**
Spring plungers are used as ejectors, damper pins, fixing and retaining pins in many sectors of the tool-, jig- and fixture-making industries. Assembly requires the use of special FIBRO insertion tool (2470.12.010.017).

**Note:**
Worn gas springs cannot be repaired, they have to be replaced completely.

Pressure medium: Nitrogen - $N_2$
Max. filling pressure: 150 bar
Min. filling pressure: 20 bar
Working temperature: 0°C to +80°C
Temperature related force increase: ± 0.3%/°C
Max. recommended extensions per minute: approx. 30 to 80 (at 20°C)
Max. piston speed: 1.6 m/s

**Attention!**
**Different colour coding for spring force used in WDX standard**

Upon customers request, also available unfilled, Order No 2479.034.00000...., Colour: black

2479.034.

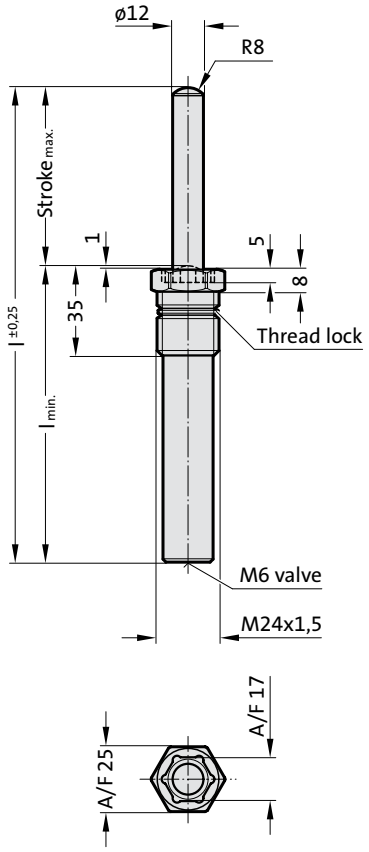

APPROVED PED 2014/68/EU

V>max

## 2479.034. Gas spring (Spring plunger), to WDX

| Spring type: | | | | .00020. | | .00040. | | .00080. | | .00170. | |
|---|---|---|---|---|---|---|---|---|---|---|---|
| Order No* | $Stroke_{max.}$ | l | $l_{min.}$ | $F_{initial}$ [daN] | $F_{final}$ [daN] | $F_{initial}$ [daN] | $F_{final}$ [daN] | $F_{initial}$ [daN] | $F_{final}$ [daN] | $F_{initial}$ [daN] | $F_{final}$ [daN] |
| 2479.034.□□□□□.010 | 10 | 65 | 55 | 23 | 32.5 | 45 | 65 | 85 | 122 | 170 | 243.5 |
| 2479.034.□□□□□.016 | 16 | 77 | 61 | 23 | 36.6 | 45 | 73.3 | 85 | 137.4 | 170 | 274.8 |
| 2479.034.□□□□□.020 | 20 | 85 | 65 | 23 | 36 | 45 | 72 | 85 | 134.5 | 170 | 268 |
| 2479.034.□□□□□.025 | 25 | 95 | 70 | 23 | 38.9 | 45 | 77.8 | 85 | 145.9 | 170 | 291.8 |
| 2479.034.□□□□□.030 | 30 | 105 | 75 | 23 | 37.5 | 45 | 75 | 85 | 141 | 170 | 281.5 |
| 2479.034.□□□□□.038 | 38 | 121 | 83 | 23 | 40.7 | 45 | 81.4 | 85 | 152.7 | 170 | 305.4 |
| 2479.034.□□□□□.040 | 40 | 125 | 85 | 23 | 38.5 | 45 | 77 | 85 | 144.5 | 170 | 289 |
| 2479.034.□□□□□.050 | 50 | 145 | 95 | 23 | 42 | 45 | 83.5 | 85 | 156.5 | 170 | 313 |
| 2479.034.□□□□□.060 | 60 | 165 | 105 | 23 | 42 | 45 | 84 | 85 | 157 | 170 | 314 |
| 2479.034.□□□□□.070 | 70 | 185 | 115 | 23 | 42 | 45 | 84 | 85 | 157.5 | 170 | 315 |
| 2479.034.□□□□□.080 | 80 | 205 | 125 | 23 | 42 | 45 | 84 | 85 | 159 | 170 | 315.5 |
| 2479.034.□□□□□.100 | 100 | 245 | 145 | 23 | 42 | 45 | 84.5 | 85 | 158 | 170 | 316.5 |
| 2479.034.□□□□□.125 | 125 | 295 | 170 | 23 | 42 | 45 | 84.5 | 85 | 158.5 | 170 | 317 |

*complete with spring type
Spring force marking:
Spring type - Pressure [bar] - Colour:
.00020. - 20 - green
.00040. - 40 - blue
.00080. - 75 - red
.00170. - 150 - yellow

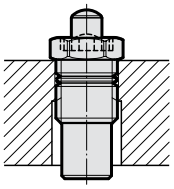

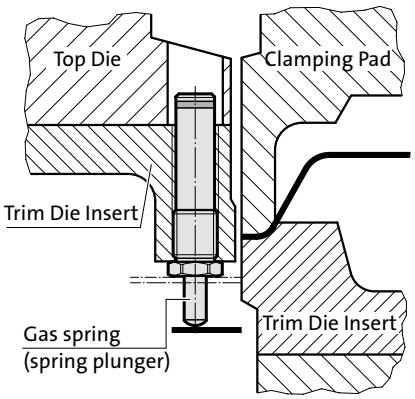

# GAS SPRING, SMALL DIMENSION, LOW FORCE

# GAS SPRING, SMALL DIMENSION AND LOW FORCE
# MOUNTING VARIATIONS

2480.051.00013

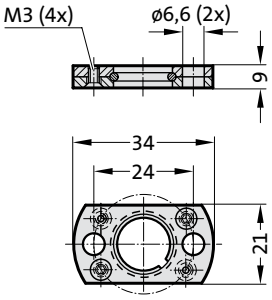


**Note:**

[1] Fixing at bottom thread only recommanded for stroke length up to 25 mm.

**Mounting examples:**

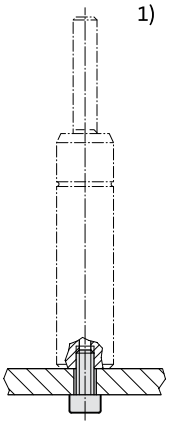


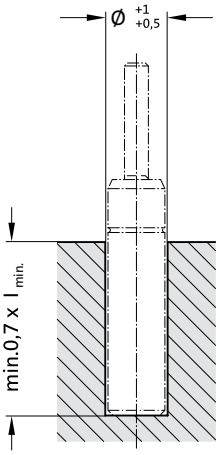


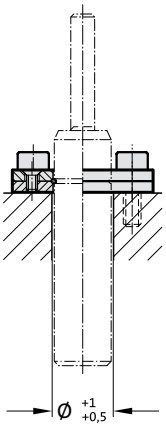

# GAS SPRING, SMALL DIMENSION AND LOW FORCE

**Description:**
The gas springs are colour-coded according to the spring force rating ranges 13-25-38-50 daN.

All springs, regardless of their spring force ratings, are of the same design. The differing force ratings result exclusively from the differing charge pressures.
Gas can be added or reduced from below.

**Note:**
Worn gas springs cannot be repaired, they have to be replaced completely.

Pressure medium: Nitrogen $N_2$
Max. filling pressure: 180 bar
Min. filling pressure: 20 bar
Working temperature: 0°C to +80°C
Temperature related force increase: ± 0.3%/°C
Max. recommended extensions per minute: approx. 40 to 100 (at 20°C)
Max. piston speed: 1.6 m/s

Spring forces as per spring diagram.

Upon customers request, also available unfilled, Order No 2482.72.00000...., Colour: black

2482.72.

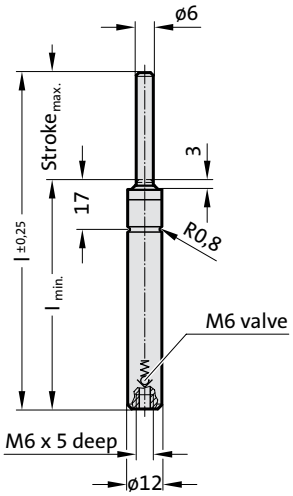

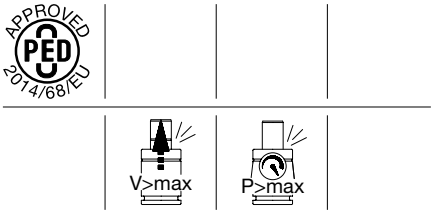


## 2482.72. Gas spring, small dimension and low force

| Order No* | $Stroke_{max.}$ | l | $l_{min.}$ |
|---|---|---|---|
| 2482.72.□□□□□.007 | 7 | 56 | 49 |
| 2482.72.□□□□□.010 | 10 | 62 | 52 |
| 2482.72.□□□□□.013 | 12.7 | 67.4 | 54.7 |
| 2482.72.□□□□□.015 | 15 | 72 | 57 |
| 2482.72.□□□□□.019 | 19 | 80 | 61 |
| 2482.72.□□□□□.025 | 25 | 92 | 67 |
| 2482.72.□□□□□.038 | 38 | 118 | 80 |
| 2482.72.□□□□□.050 | 50 | 142 | 92 |
| 2482.72.□□□□□.063 | 63.5 | 172 | 108.5 |
| 2482.72.□□□□□.075 | 75 | 195 | 120 |
| 2482.72.□□□□□.080 | 80 | 205 | 125 |
| 2482.72.□□□□□.100 | 100 | 245 | 145 |
| 2482.72.□□□□□.125 | 125 | 295 | 170 |

*complete with initial spring force
Spring force marking: Initial spring force [daN] - Pressure [bar] - Colour:
.00013. - 45 - green
.00025. - 90 - blue
.00038. - 135 - red
.00050. - 180 - yellow

Initial spring force versus charge pressure

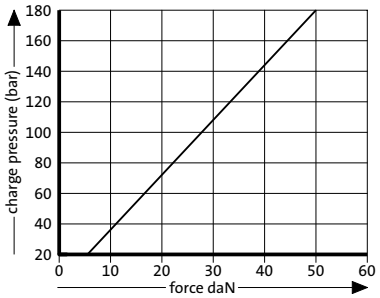


Spring force Diagram displacement versus stroke rise

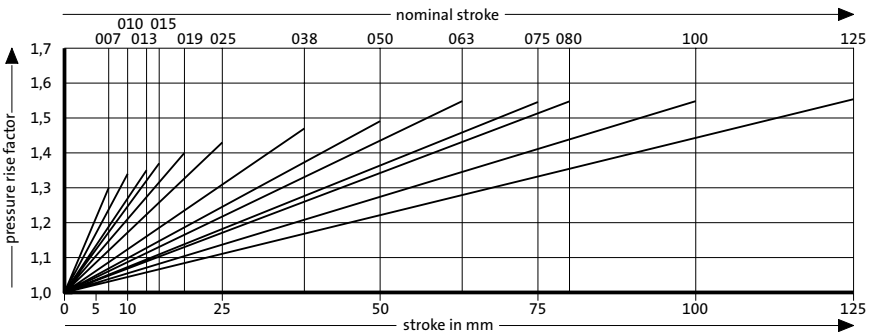


Pressure rise factor accounts for displacement but not external influences!

# GAS SPRING, SMALL DIMENSION AND LOW FORCE
# MOUNTING VARIATIONS

2480.051.00018

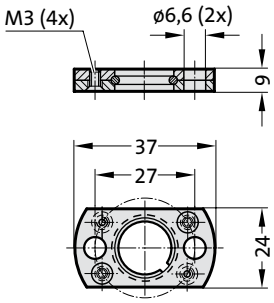


**Note:**

[1] Fixing at bottom thread only recommanded for stroke length up to 25 mm.

**Mounting examples:**

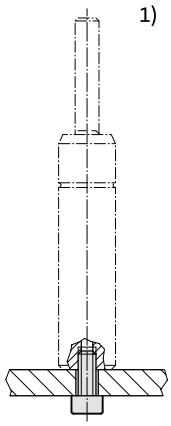


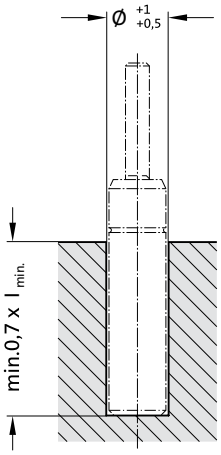


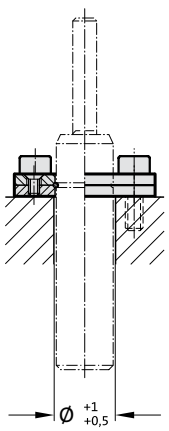

# GAS SPRING, SMALL DIMENSION AND LOW FORCE

**Description:**
The gas springs are colour-coded according to the spring force rating ranges 18-35-50-70 daN.

All springs, regardless of their spring force ratings, are of the same design. The differing force ratings result exclusively from the differing charge pressures.
Gas can be added or reduced from below.

**Note:**
Worn gas springs cannot be repaired, they have to be replaced completely.

Pressure medium: Nitrogen $N_2$
Max. filling pressure: 180 bar
Min. filling pressure: 20 bar
Working temperature: 0°C to +80°C
Temperature related force increase: ± 0.3%/°C
Max. recommended extensions per minute: approx. 100 to 150 (at 20°C)
Max. piston speed: 1.6 m/s

Spring forces as per spring diagram.

Upon customers request, also available unfilled, Order No 2482.73.00000. ... .1,
Colour: black

2482.73. .1

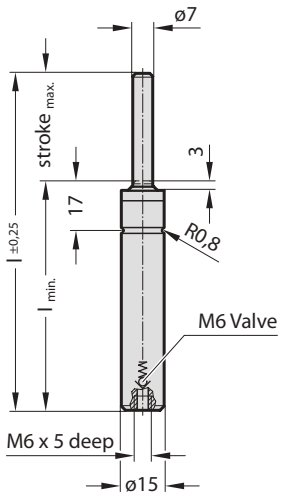

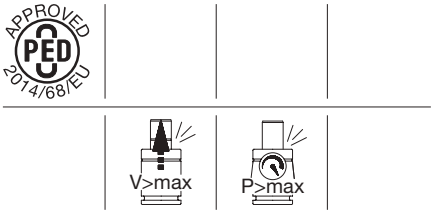


## 2482.73. .1 Gas spring, small dimension and low force

| Order No* | Stroke$_{max.}$ | l | l$_{min.}$ |
|---|---|---|---|
| 2482.73.□□□□□.007.1 | 7 | 56 | 49 |
| 2482.73.□□□□□.010.1 | 10 | 62 | 52 |
| 2482.73.□□□□□.013.1 | 12.7 | 67.4 | 54.7 |
| 2482.73.□□□□□.015.1 | 15 | 72 | 57 |
| 2482.73.□□□□□.019.1 | 19 | 80 | 61 |
| 2482.73.□□□□□.025.1 | 25 | 92 | 67 |
| 2482.73.□□□□□.038.1 | 38.1 | 118.2 | 80.1 |
| 2482.73.□□□□□.050.1 | 50 | 142 | 92 |
| 2482.73.□□□□□.063.1 | 63.5 | 172 | 108.5 |
| 2482.73.□□□□□.075.1 | 75 | 195 | 120 |
| 2482.73.□□□□□.080.1 | 80 | 205 | 125 |
| 2482.73.□□□□□.100.1 | 100 | 245 | 145 |
| 2482.73.□□□□□.125.1 | 125 | 295 | 170 |

*complete with initial spring force
Spring force marking: Initial spring force [daN] - Pressure [bar] - Colour:
.00018. - 45 - green
.00035. - 90 - blue
.00050. - 135 - red
.00070. - 180 - yellow

Initial spring force
versus charge pressure

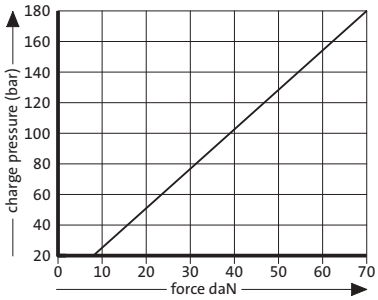


Spring force Diagram displacement versus stroke rise

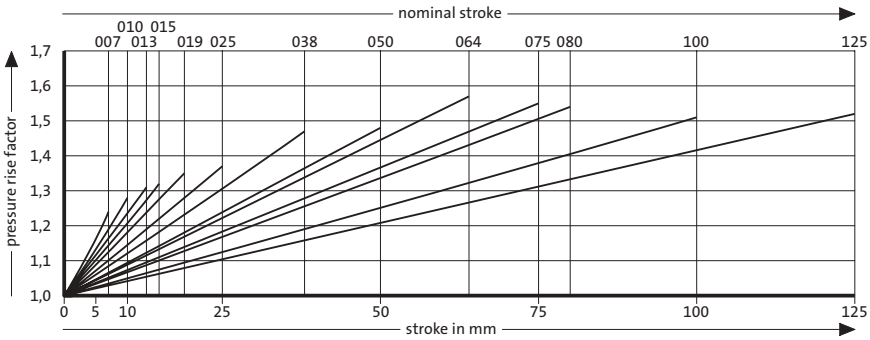


Pressure rise factor accounts for displacement but not external influences!

# GAS SPRING, SMALL DIMENSION AND LOW FORCE
# MOUNTING VARIATIONS

2480.051.03.00030

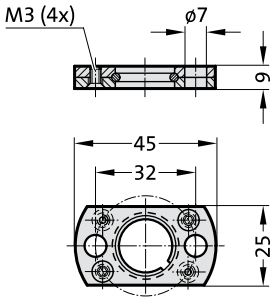


2480.052.00030

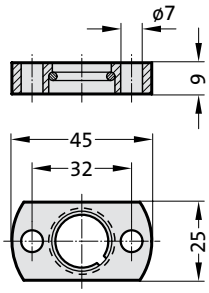


**Note:**

[1] Fixing at bottom thread only recommanded for stroke length up to 25 mm.

**Mounting examples:**

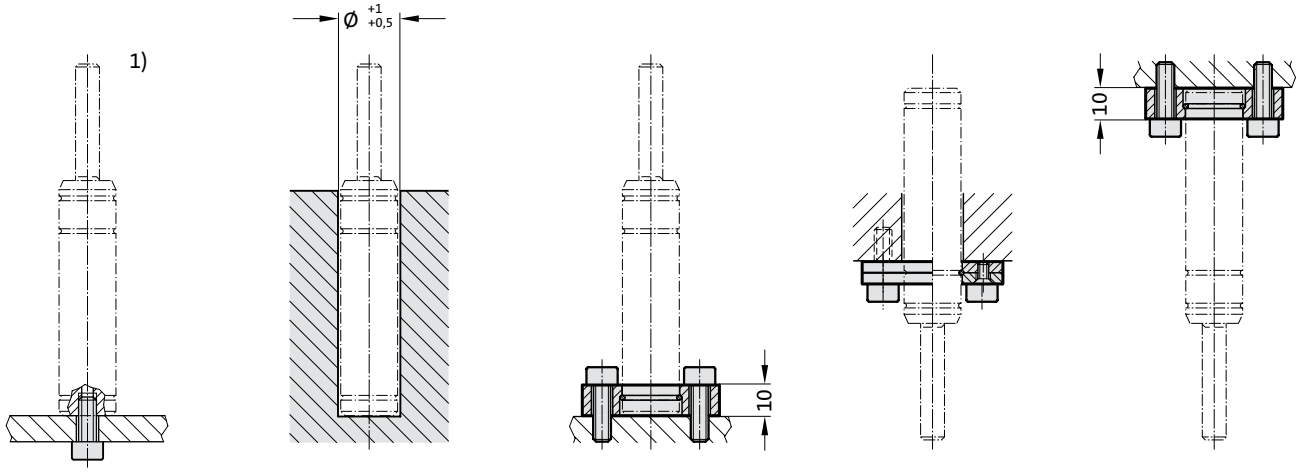

# GAS SPRING, SMALL DIMENSION AND LOW FORCE

**Description:**
The gas springs are colour-coded according to the spring force rating ranges 30-50-70-90 daN.

All springs, regardless of their spring force ratings, are of the same design. The differing force ratings result exclusively from the differing charge pressures.
Gas can be added or reduced from below.

**Note:**
Worn gas springs cannot be repaired, they have to be replaced completely.

Pressure medium: Nitrogen $N_2$
Max. filling pressure: 180 bar
Min. filling pressure: 25 bar
Working temperature: 0°C to +80°C
Temperature related force increase: ± 0.3%/°C
Max. recommended extensions per minute: approx. 100 to 150 (at 20°C)
Max. piston speed: 1.6 m/s

Spring forces as per spring diagram.

Upon customers request, also available unfilled, Order No 2482.74.00000. ... .2, Colour: black

2482.74. .2

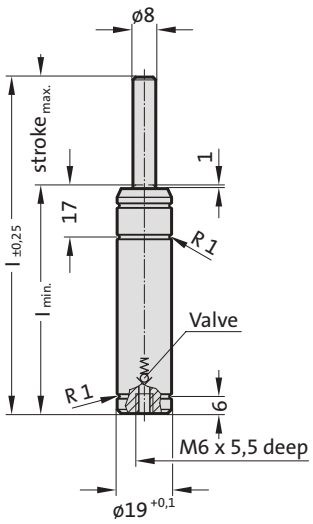

APPROVED PED 2014/68/EU | VDI | ISO

S>max | V>max | P>max

## 2482.74. .2 Gas spring, small dimension and low force

| Order No* | Stroke$_{max.}$ | l | l$_{min.}$ |
|---|---|---|---|
| 2482.74.□□□□□.007.2 | 7 | 56 | 49 |
| 2482.74.□□□□□.010.2 | 10 | 62 | 52 |
| 2482.74.□□□□□.015.2 | 15 | 72 | 57 |
| 2482.74.□□□□□.025.2 | 25 | 92 | 67 |
| 2482.74.□□□□□.038.2 | 38.1 | 118.2 | 80.1 |
| 2482.74.□□□□□.050.2 | 50 | 142 | 92 |
| 2482.74.□□□□□.063.2 | 63.5 | 172 | 108.5 |
| 2482.74.□□□□□.080.2 | 80 | 205 | 125 |
| 2482.74.□□□□□.100.2 | 100 | 245 | 145 |
| 2482.74.□□□□□.125.2 | 125 | 295 | 170 |

*complete with initial spring force
Spring force marking:
Initial spring force [daN] - Pressure [bar] - Colour:
.00030. - 60 - green
.00050. - 100 - blue
.00070. - 140 - red
.00090. - 180 - yellow

Initial spring force versus charge pressure

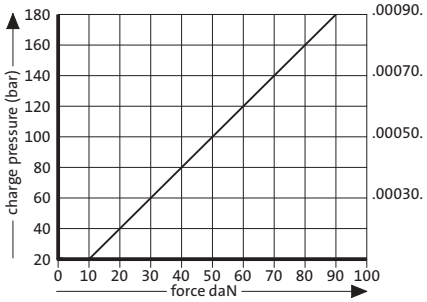


Spring force Diagram displacement versus stroke rise

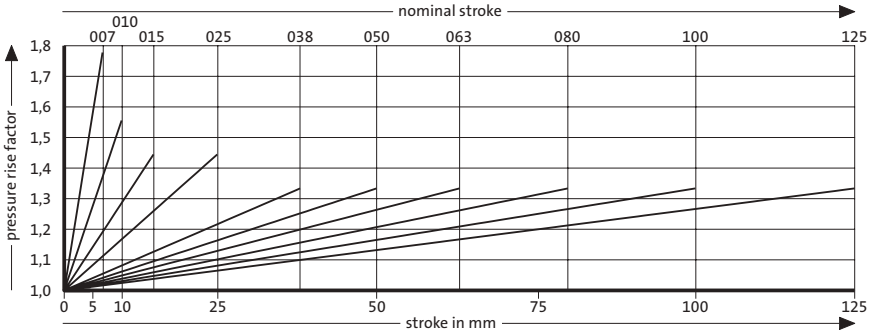


Pressure rise factor accounts for displacement but not external influences!

# GAS SPRING, SMALL DIMENSION AND LOW FORCE
# MOUNTING VARIATIONS

## 2480.051.00150

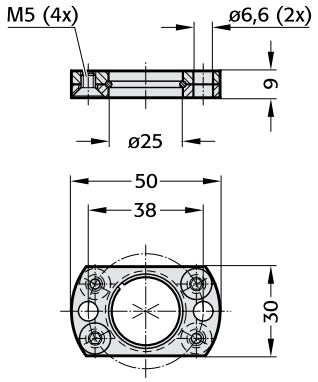


## 2480.053.00150

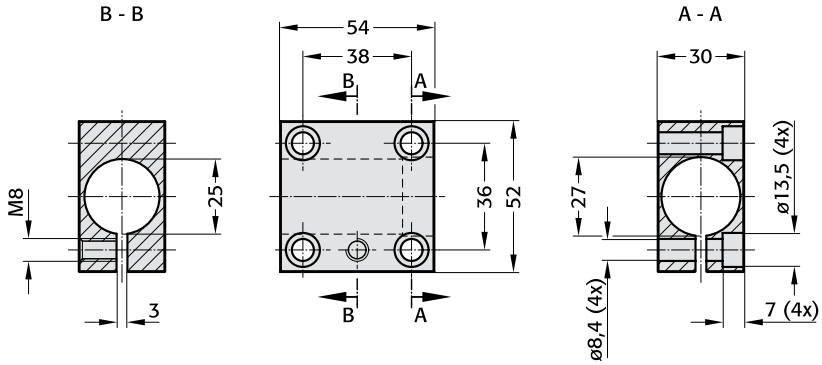


## 2480.054.00150

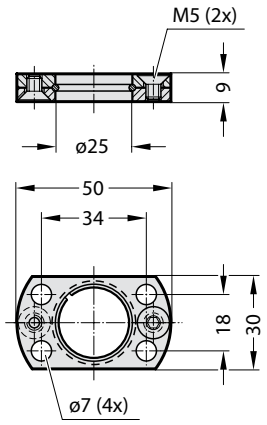


**Note:**

[2] Attention:
The spring force must be absorbed by the stop Surface!

**Mounting examples:**

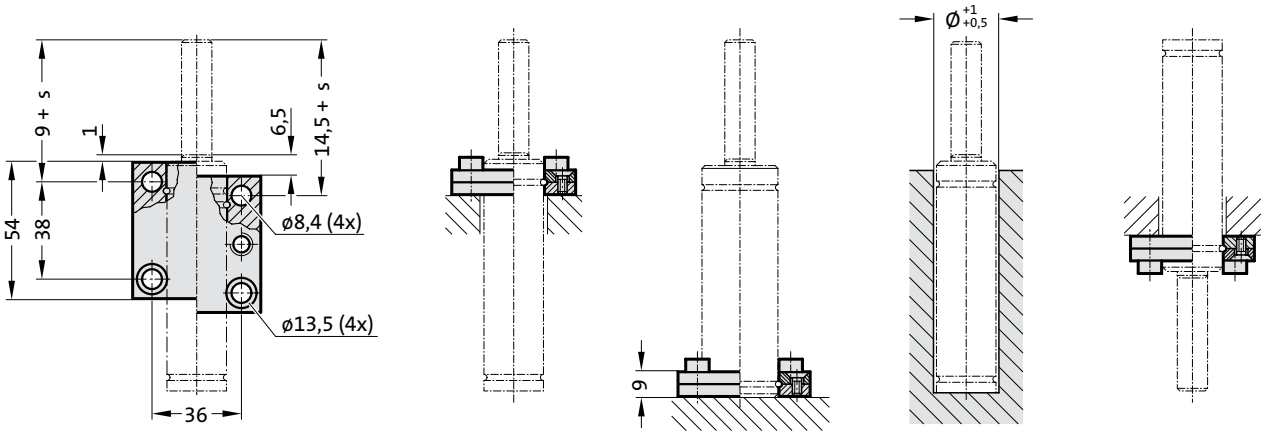

# GAS SPRING, SMALL DIMENSION AND LOW FORCE

**Description:**
The gas springs are colour-coded according to the spring force rating ranges 50–100–150–200 daN.

All springs, regardless of their spring force ratings, are of the same design. The differing force ratings result exclusively from the differing charge pressures.
Do take into consideration the colour-coded pressure rating during repair work and recharging.

**Note:**
Order No for spare parts kit: 2480.21.00150

Pressure medium: Nitrogen $N_2$
Max. filling pressure: 180 bar
Min. filling pressure: 25 bar
Working temperature: 0°C to +80°C
Temperature related force increase: ± 0.3%/°C
Max. recommended extensions per minute: approx. 80 to 100 (at 20°C)
Max. piston speed: 1.6 m/s

Spring forces as per spring diagram.

Upon customers request, also available unfilled, Order No 2480.21.00000...., Colour: black

2480.21.

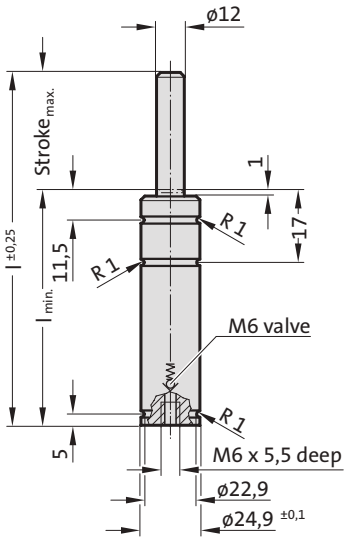

APPROVED PED 2014/68/EU | VDI | ISO

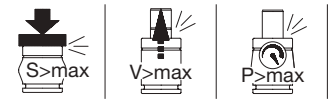


## 2480.21. Gas spring, small dimension and low force

| Order No* | Stroke$_{max.}$ (s) | l | $l_{min.}$ |
|---|---|---|---|
| 2480.21.□□□□□.010 | 10 | 62 | 52 |
| 2480.21.□□□□□.013 | 12.7 | 67.4 | 54.7 |
| 2480.21.□□□□□.015 | 15 | 72 | 57 |
| 2480.21.□□□□□.016 | 16 | 74 | 58 |
| 2480.21.□□□□□.025 | 25 | 92 | 67 |
| 2480.21.□□□□□.038 | 38.1 | 118.2 | 80.1 |
| 2480.21.□□□□□.050 | 50 | 142 | 92 |
| 2480.21.□□□□□.063 | 63.5 | 172 | 108.5 |
| 2480.21.□□□□□.080 | 80 | 205 | 125 |
| 2480.21.□□□□□.100 | 100 | 245 | 145 |
| 2480.21.□□□□□.125 | 125 | 295 | 170 |

*complete with initial spring force
Spring force marking:
Initial spring force [daN] - Pressure [bar] - Colour:
.00050. - 45 - green
.00100. - 90 - blue
.00150. - 135 - red
.00200. - 180 - yellow

Initial spring force versus charge pressure

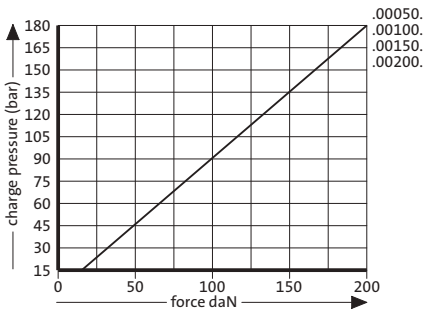


Spring force Diagram displacement versus stroke rise

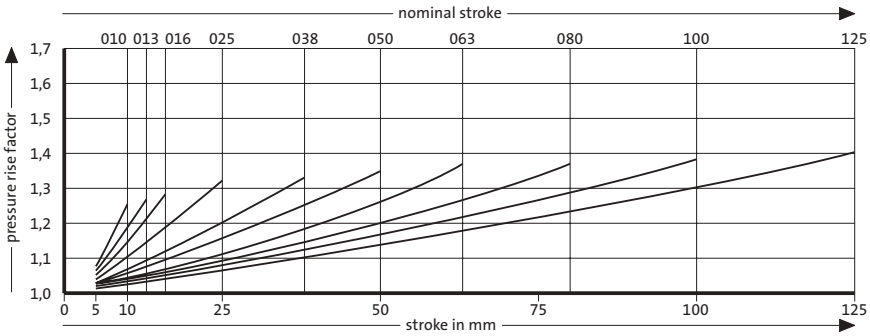


Pressure rise factor accounts for displacement but not external influences!

# GAS SPRING, SMALL DIMENSION AND LOW FORCE
# MOUNTING VARIATIONS

2480.022.00150

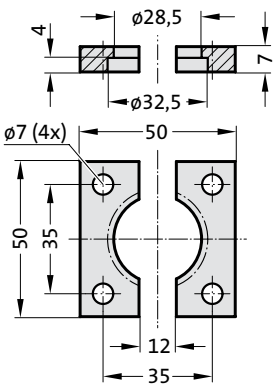


2480.044.00150[2)]

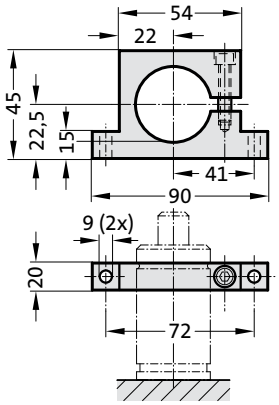


2480.044.03.00150[2)]

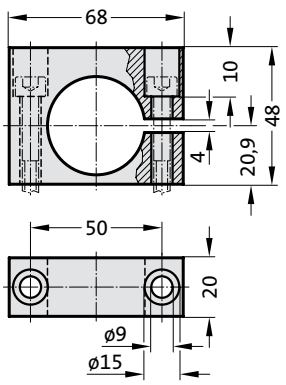


2480.055.00150

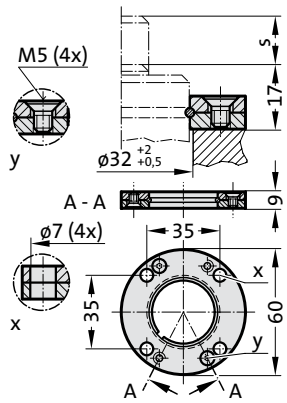


2480.057.00150

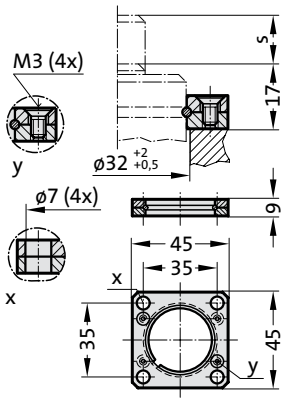


**Note:**

[2)] Attention:
The spring force must be absorbed by the stop Surface!

**Mounting examples:**

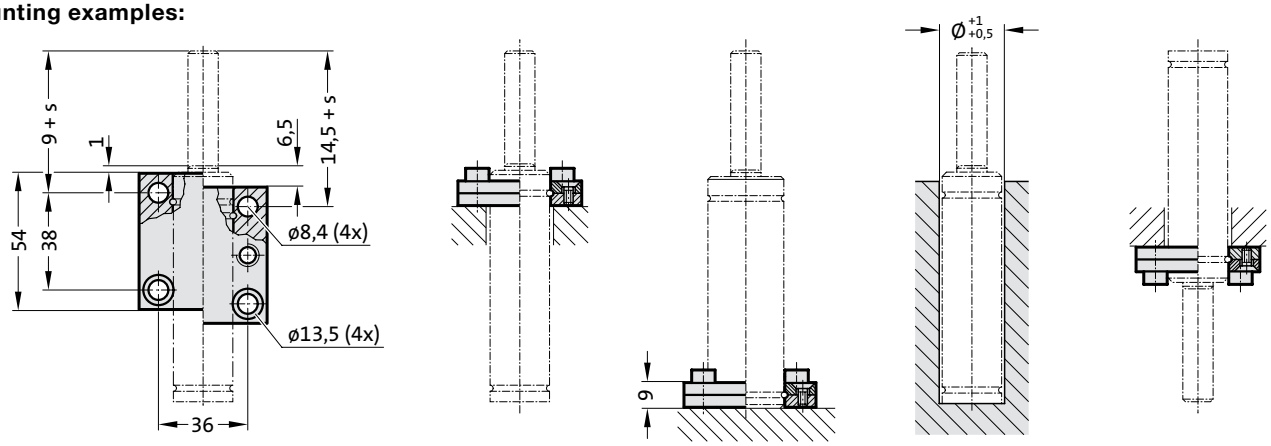

# GAS SPRING, SMALL DIMENSION AND LOW FORCE

**Description:**
The gas springs are colour-coded according to the spring force rating ranges 50–100–150–200 daN.

All springs, regardless of their spring force ratings, are of the same design. The differing force ratings result exclusively from the differing charge pressures.
Do take into consideration the colour-coded pressure rating during repair work and recharging.

**Note:**
Order No for spare parts kit: 2480.21.00150

Pressure medium: Nitrogen $N_2$
Max. filling pressure: 180 bar
Min. filling pressure: 25 bar
Working temperature: 0°C to +80°C
Temperature related force increase: ± 0.3%/°C
Max. recommended extensions per minute: approx. 80 to 100 (at 20°C)
Max. piston speed: 1.6 m/s

Spring forces as per spring diagram.

Upon customers request, also available unfilled, Order No 2480.22.00000...., Colour: black

## 2480.22. .1

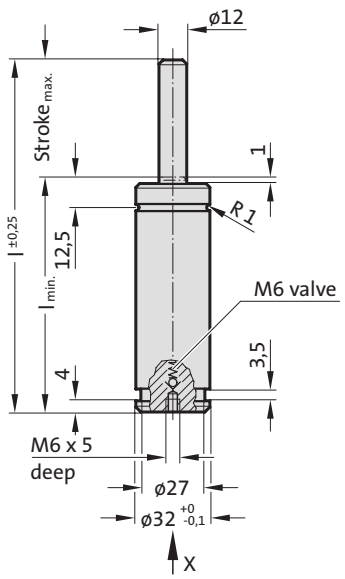


View X - Gas spring

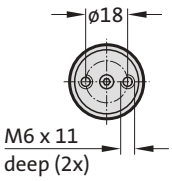

APPROVED PED 2014/68/EU | VDI | ISO

S>max | V>max | P>max

### 2480.22. .1 Gas spring, small dimension and low force

| Order No* | $Stroke_{max.}$ (s) | l | $l_{min.}$ |
|---|---|---|---|
| 2480.22.□□□□□.010.1 | 10 | 70 | 60 |
| 2480.22.□□□□□.013.1 | 12.7 | 75.4 | 62.7 |
| 2480.22.□□□□□.016.1 | 16 | 82 | 66 |
| 2480.22.□□□□□.025.1 | 25 | 100 | 75 |
| 2480.22.□□□□□.038.1 | 38.1 | 126.2 | 88.1 |
| 2480.22.□□□□□.050.1 | 50 | 150 | 100 |
| 2480.22.□□□□□.063.1 | 63.5 | 177 | 113.5 |
| 2480.22.□□□□□.080.1 | 80 | 210 | 130 |
| 2480.22.□□□□□.100.1 | 100 | 250 | 150 |
| 2480.22.□□□□□.125.1 | 125 | 300 | 175 |

*complete with initial spring force
Spring force marking:
Initial spring force [daN] - Pressure [bar] - Colour:
.00050. - 45 - green
.00100. - 90 - blue
.00150. - 135 - red
.00200. - 180 - yellow

Initial spring force versus charge pressure

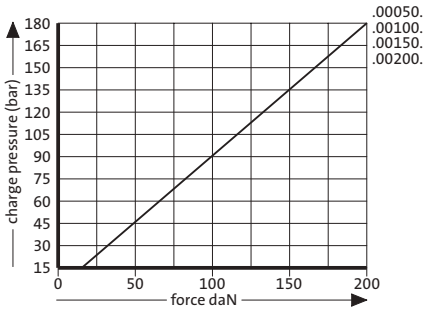


Spring force Diagram displacement versus stroke rise

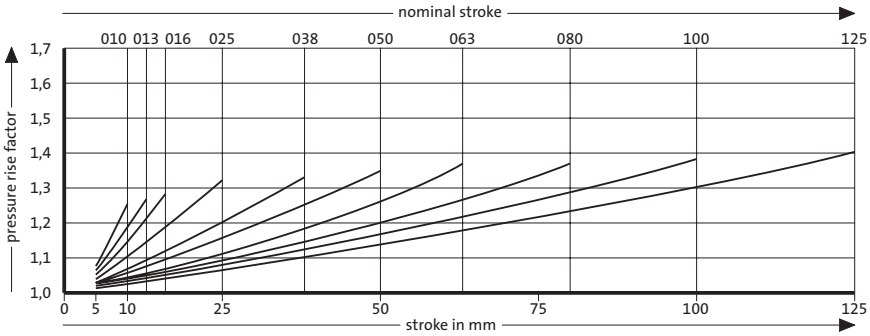


Pressure rise factor accounts for displacement but not external influences!

# GAS SPRING, SMALL DIMENSION AND LOW FORCE MOUNTING VARIATIONS

## 2480.051.00150

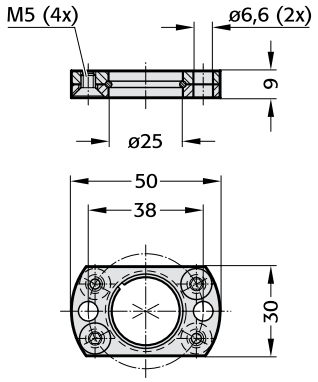


## 2480.053.00150

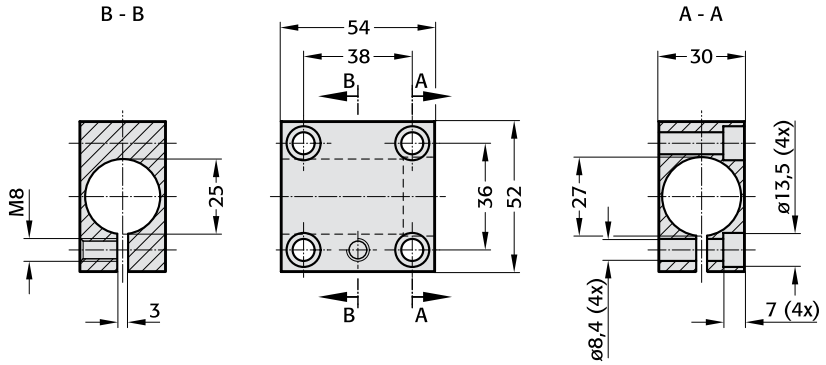


## 2480.054.00150

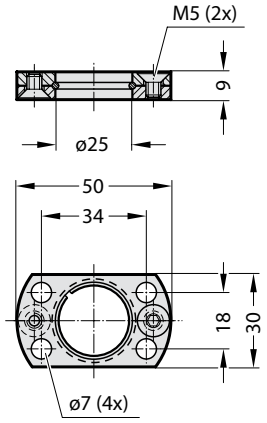


**Note:**

Only gas spring with a stroke of 25 mm or greater can be attached using the upper groove. Only gas spring with a stroke of 38,1 mm or greater can be attached using the lower groove.

**Mounting examples:**

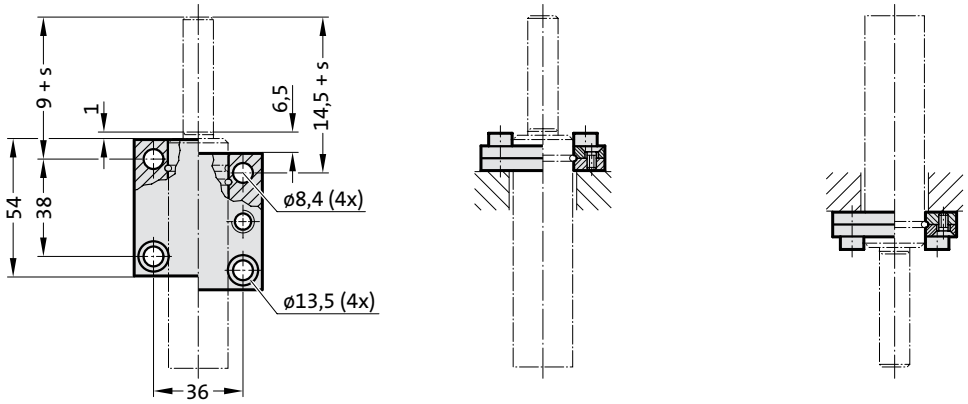

# GAS SPRING, SMALL DIMENSION AND LOW FORCE

**Description:**
Gas spring will be delivered unfilled and can only be used in a permanent connection (valveless).

**Note:**
Initial spring force at 180 bar = 200 daN

Order No for spare parts kit: 2480.21.00150

Pressure medium: Nitrogen - $N_2$
Max. filling pressure: 180 bar
Min. filling pressure: 25 bar
Working temperature: 0°C bis +80°C
Temerature related force increase: ± 0,3%/°C
Max. recommended extensions per minute: ca. 80 to 100 (at 20°C)
Max. piston speed: 1,6 m/s

Spring forces as per spring diagram.

2480.23.

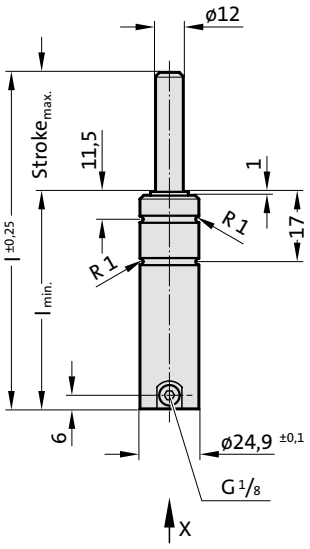


View X

APPROVED PED 2014/68/EU

S>max V>max P>max

**2480.23.**

**Gas spring, small dimension and low force**

| Order No | Stroke$_{max.}$ (s) | $l_{min.}$ | l |
|---|---|---|---|
| 2480.23.00000.010 | 10 | 52 | 62 |
| 2480.23.00000.013 | 12.7 | 54.7 | 67.4 |
| 2480.23.00000.016 | 16 | 58 | 74 |
| 2480.23.00000.025 | 25 | 67 | 92 |
| 2480.23.00000.038 | 38.1 | 80.1 | 118.2 |
| 2480.23.00000.050 | 50 | 92 | 142 |
| 2480.23.00000.063 | 63.5 | 108.5 | 172 |
| 2480.23.00000.080 | 80 | 125 | 205 |
| 2480.23.00000.100 | 100 | 145 | 245 |
| 2480.23.00000.125 | 125 | 170 | 295 |

Initial spring force
versus charge pressure

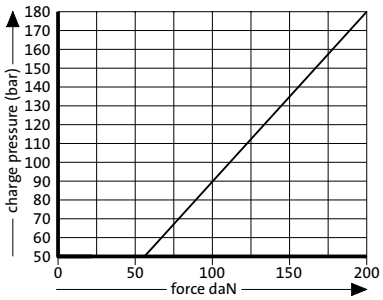


Spring force Diagram displacement versus stroke rise

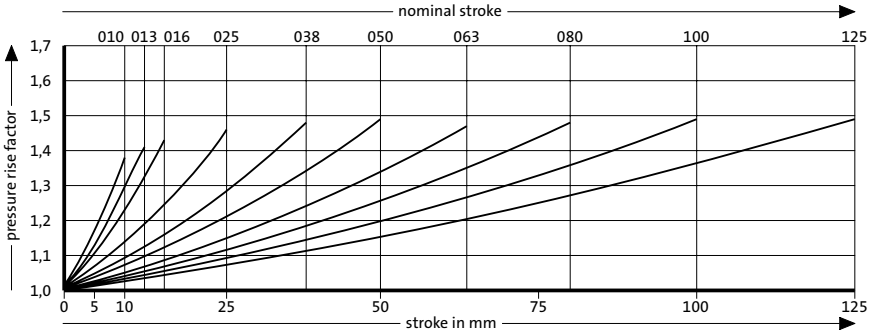


Pressure rise factor accounts for displacement but not external influences!

# GAS SPRINGS STANDARD

# GAS SPRING, STANDARD
# MOUNTING VARIATIONS

2480.007.00250

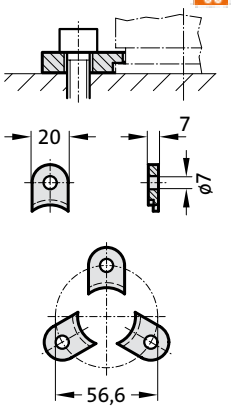


2480.008.00250 [3]

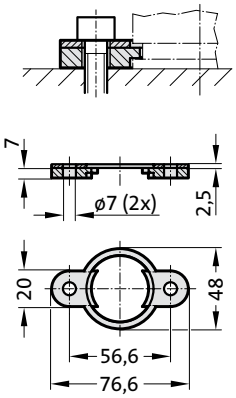


2480.010.00250.055 [3]
2480.010.00250.095* [3]

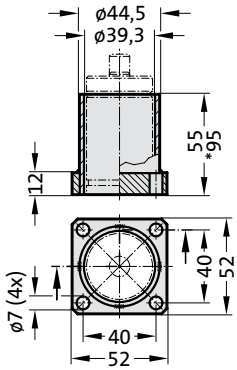


2480.022.00250

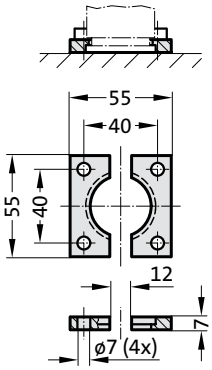


2480.044.00250 [2]

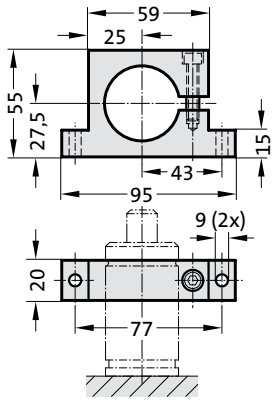


2480.044.03.00250 [2]

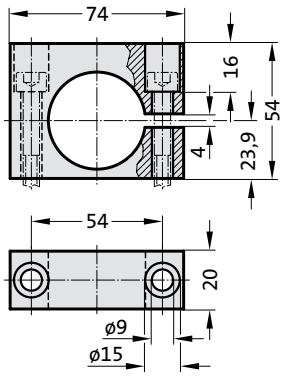


2480.055.00250

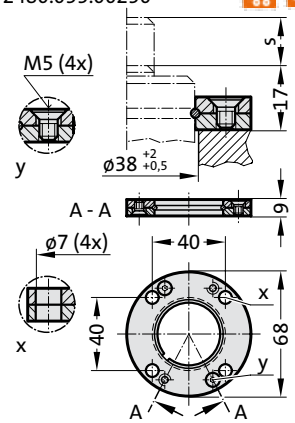


2480.057.00250

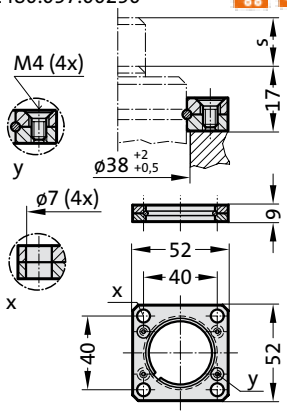


**Note:**

[2] Attention:
The spring force must be absorbed by the stop Surface!
[3] Not for use with composite connection.

# GAS SPRING, STANDARD

**Note:**
Initial spring force at 150 bar = 250 daN

Order No for spare parts kit: 2480.13.00250
Gas spring without valve
Order No (example): 2480.13.00250. .P

Pressure medium: Nitrogen $N_2$
Max. filling pressure: 150 bar
Min. filling pressure: 50 bar
Working temperature: 0°C to +80°C
Temperature related force increase: ± 0.3%/°C
Max. recommended extensions per minute:
approx. 80 to 100 (at 20°C)
Max. piston speed: 1.6 m/s

2480.13.00250.

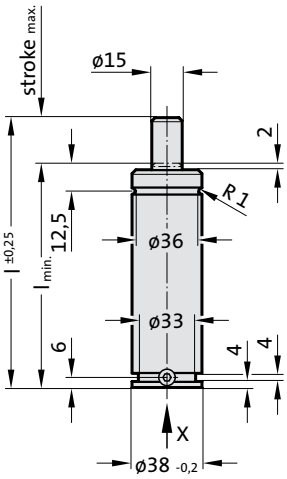

APPROVED PED 2014/68/EU | VDI | ISO

S>max | V>max | P>max | Flex Guide™

**2480.13.00250.**

**Gas spring, Standard**

View X

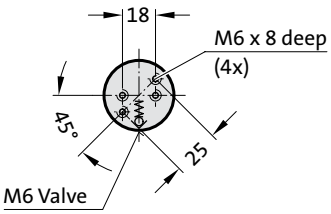


| Order No | Stroke$_{max.}$ (s) | $l_{min.}$ | l |
|---|---|---|---|
| 2480.13.00250.010 | 10 | 60 | 70 |
| 2480.13.00250.013 | 12.7 | 62.7 | 75.4 |
| 2480.13.00250.016 | 16 | 66 | 82 |
| 2480.13.00250.019 | 19 | 69 | 88 |
| 2480.13.00250.025 | 25 | 75 | 100 |
| 2480.13.00250.038 | 38.1 | 88.1 | 126.2 |
| 2480.13.00250.050 | 50 | 100 | 150 |
| 2480.13.00250.063 | 63.5 | 113.5 | 177 |
| 2480.13.00250.080 | 80 | 130 | 210 |
| 2480.13.00250.100 | 100 | 150 | 250 |
| 2480.13.00250.125 | 125 | 175 | 300 |

Initial spring force
versus charge pressure

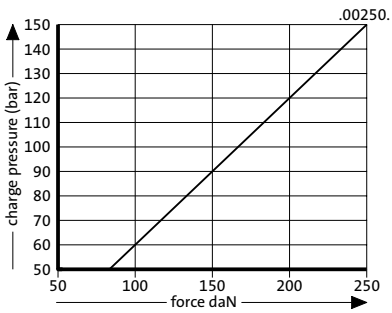


Spring force Diagram displacement versus stroke rise

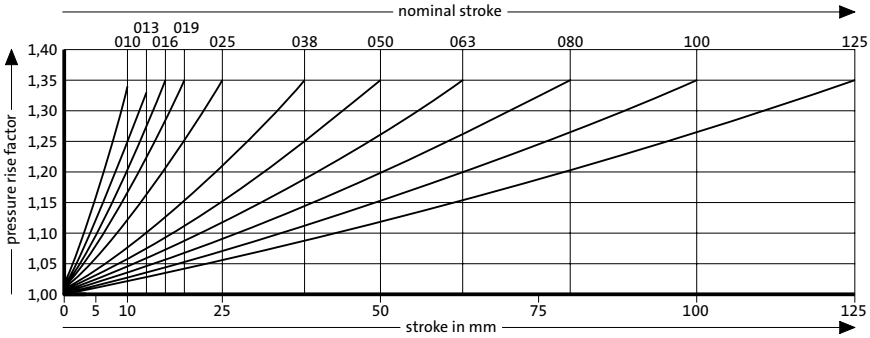


Pressure rise factor accounts for displacement but not external influences!

# GAS SPRING, STANDARD
# MOUNTING VARIATIONS

2480.007.00500

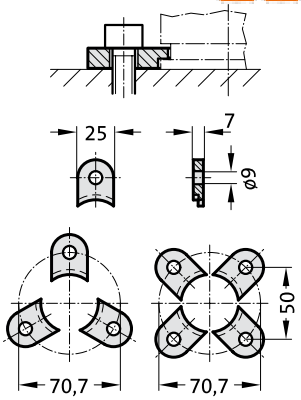


2480.008.00500 [3]

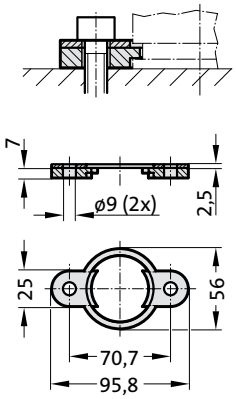


2480.010.00500.095 [3]
2480.010.00500.180* [3]

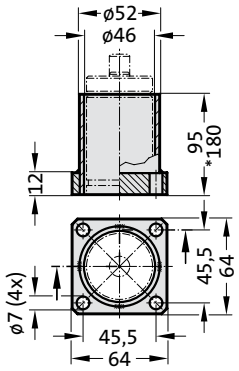


2480.011.00500

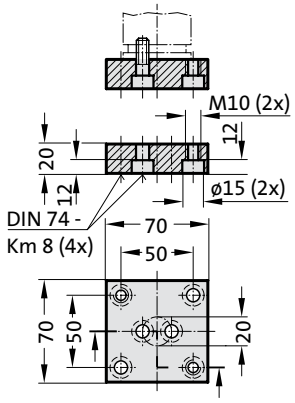


2480.011.00500.1

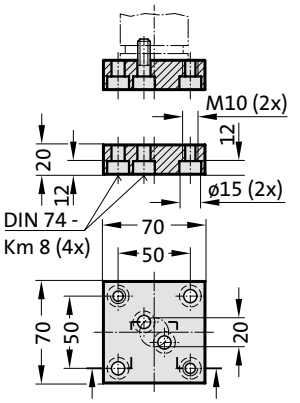


2480.011.00500.2

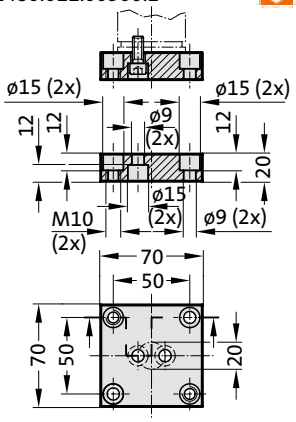


2480.022.00500

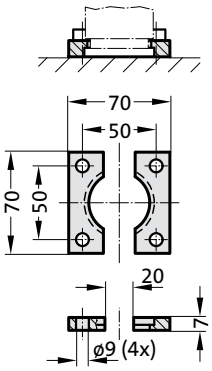


2480.044.00500 [2]

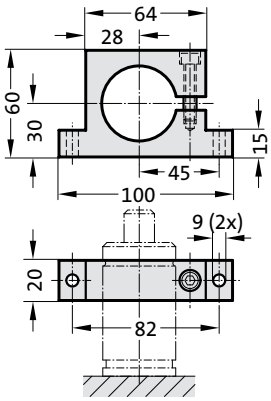


2480.044.03.00500 [2]

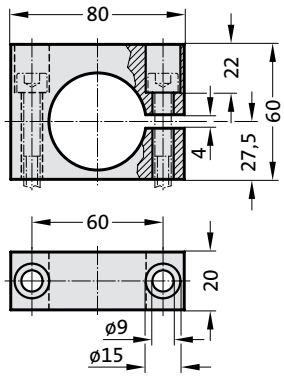


2480.055.00500

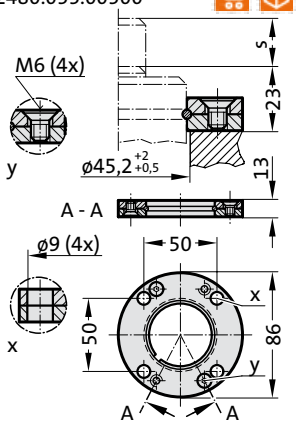


2480.057.00500

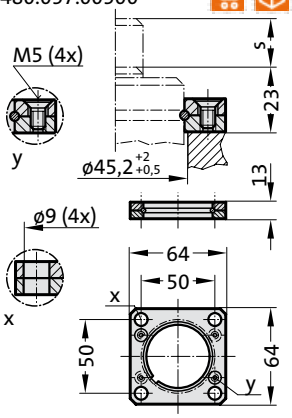


2480.064.00500 [4]

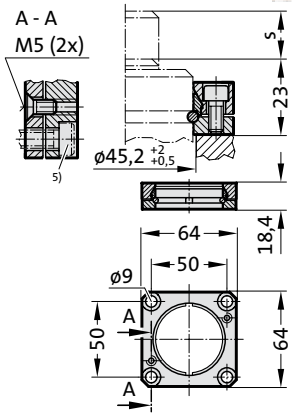


**Note:**

[2] Attention:
The spring force must be absorbed by the stop Surface!
[3] Not for use with composite connection.
[4] Square collar flange, non-rotating, fixing for composite connection.
[5] Machine screws with hexagonal socket (compact head recommended)

# GAS SPRING, STANDARD

**Note:**
Initial spring force at 150 bar = 470 daN

Order No for spare parts kit: 2480.13.00500
Gas spring without valve
Order No (example): 2480.13.00500. .P

Pressure medium: Nitrogen $N_2$
Max. filling pressure: 150 bar
Min. filling pressure: 50 bar
Working temperature: 0°C to +80°C
Temperature related force increase: ± 0.3%/°C
Max. recommended extensions per minute:
approx. 40 to 80 (at 20°C)
Max. piston speed: 1.6 m/s

2480.13.00500.

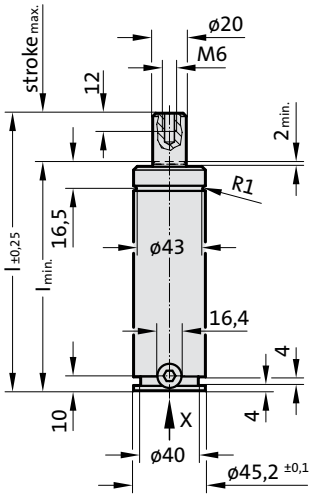

APPROVED PED 2014/68/EU | VDI | ISO

S>max | V>max | P>max | Flex Guide™

**2480.13.00500.**

**Gas spring, Standard**

View X

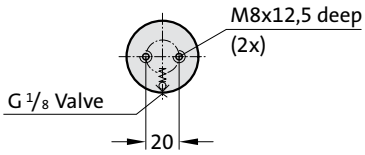


| Order No | Stroke$_{max.}$ (s) | $l_{min.}$ | l |
|---|---|---|---|
| 2480.13.00500.010 | 10 | 95 | 105 |
| 2480.13.00500.013 | 12.7 | 97.7 | 110.4 |
| 2480.13.00500.025 | 25 | 110 | 135 |
| 2480.13.00500.038 | 38.1 | 123.1 | 161.2 |
| 2480.13.00500.050 | 50 | 135 | 185 |
| 2480.13.00500.063 | 63.5 | 148.5 | 212 |
| 2480.13.00500.080 | 80 | 165 | 245 |
| 2480.13.00500.100 | 100 | 185 | 285 |
| 2480.13.00500.125 | 125 | 210 | 335 |
| 2480.13.00500.160 | 160 | 245 | 405 |

Initial spring force
versus charge pressure

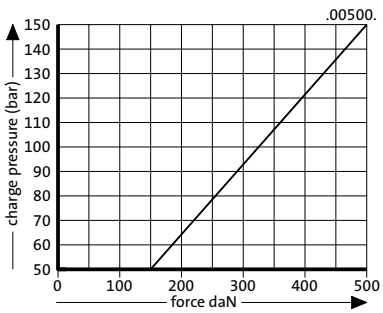


Spring force Diagram displacement versus stroke rise

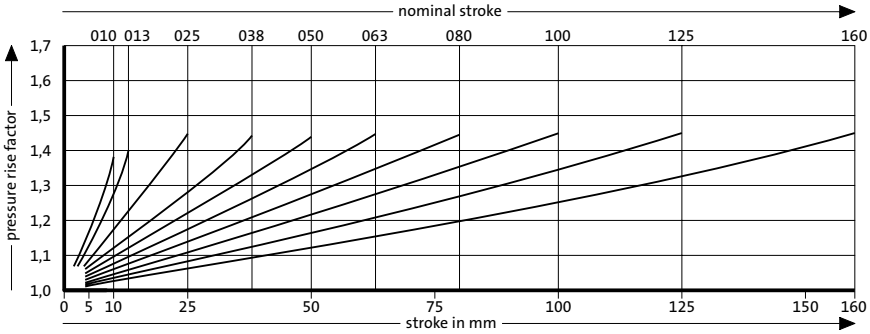


Pressure rise factor accounts for displacement but not external influences!

# GAS SPRING, STANDARD
# MOUNTING VARIATIONS

2480.007.00750

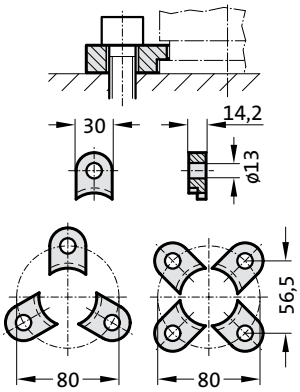


2480.008.00750 3)

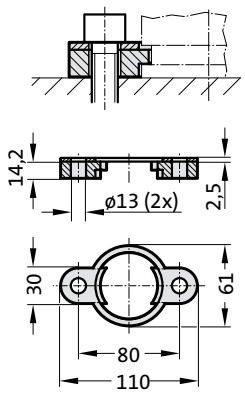


2480.010.00750.115 3)
2480.010.00750.190* 3)

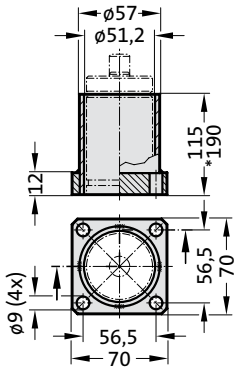


2480.011.00750

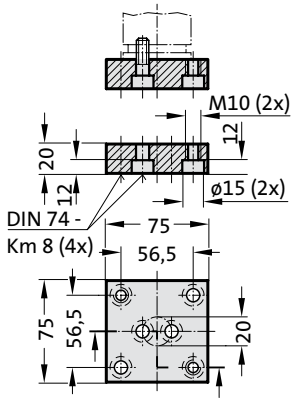


2480.011.00750.1

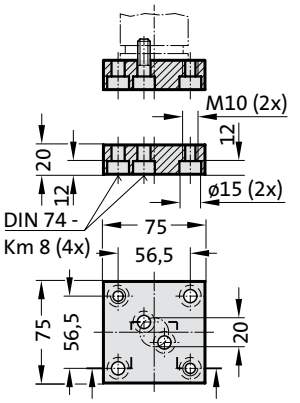


2480.011.00750.3

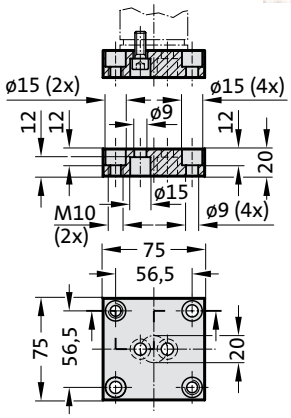


2480.022.00750

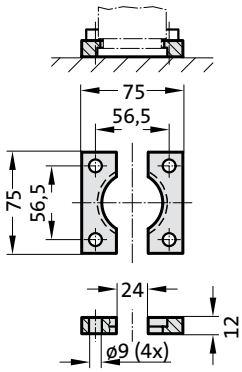


2480.044.00750 2)

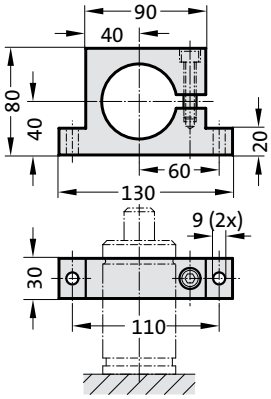


2480.044.03.00750 2)

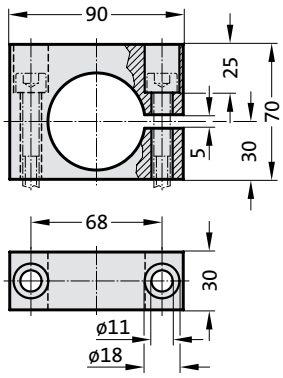


2480.045.00750 2)

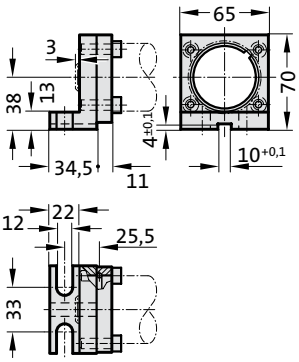


2480.047.00750 2)

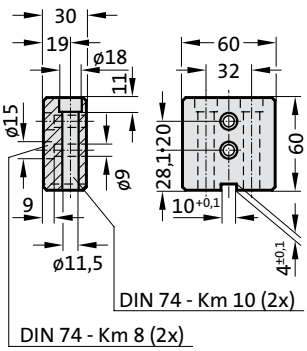


2480.055.00750

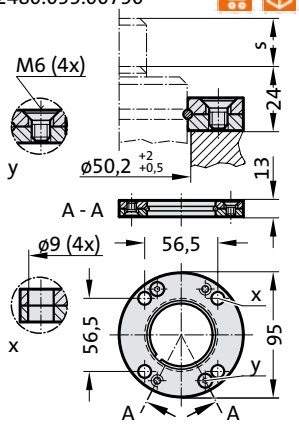


2480.057.00750

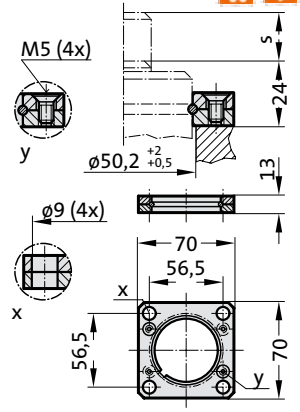


2480.064.00750 4)

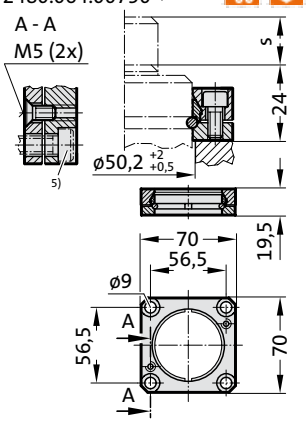


**Note:**

2) Attention:
The spring force must be absorbed by the stop Surface!
3) Not for use with composite connection.
4) Square collar flange, non-rotating, fixing for composite connection.
5) Machine screws with hexagonal socket (compact head recommended)

# GAS SPRING, STANDARD

**Note:**
Initial spring force at 150 bar = 750 daN

Order No for spare parts kit: 2480.13.00750
Order No for spare parts kit: to Renault standard EM24.54.700 2480.13.00750.R

Gas spring without valve
Order No (example): 2480.13.00750. .P

Gas spring to Renault standard EM24.54.700
Order No (example): 2480.13.00750. .R
Gas spring to Renault standard EM24.54.700 without valve
Order No (example): 2480.13.00750. .R.P

1) Special stroke lengths
Not for gas springs to Renault Standard EM24.54.700.

Pressure medium: Nitrogen $N_2$
Max. filling pressure: 150 bar
Min. filling pressure: 25 bar
Working temperature: 0°C to +80°C
Temperature related force increase: ± 0.3%/°C
Max. recommended extensions per minute: approx. 15 to 40 (at 20°C)
Max. piston speed: 1.6 m/s
for 2480. ... .R: 2.0 m/s

2480.13.00750.

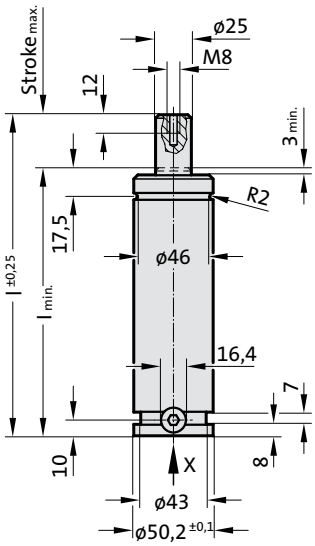


View X - Gas spring

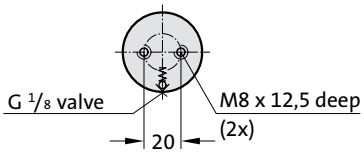

APPROVED PED 2014/68/EU | VDI | ISO

S>max | V>max | P>max | Flex Guide™

**2480.13.00750.**

**Gas spring, Standard**

| Order No | Stroke$_{max.}$ (s) | $l_{min.}$ | l |
|---|---|---|---|
| 2480.13.00750.013 | 12.7 | 107.7 | 120.4 |
| 2480.13.00750.025 | 25 | 120 | 145 |
| 2480.13.00750.038 | 38.1 | 133.1 | 171.2 |
| 2480.13.00750.050 | 50 | 145 | 195 |
| 2480.13.00750.063 | 63.5 | 158.5 | 222 |
| 2480.13.00750.075 1) | 75 | 170 | 245 |
| 2480.13.00750.080 | 80 | 175 | 255 |
| 2480.13.00750.088 1) | 87.5 | 182.5 | 270 |
| 2480.13.00750.100 | 100 | 195 | 295 |
| 2480.13.00750.113 1) | 112.5 | 207.5 | 320 |
| 2480.13.00750.125 | 125 | 220 | 345 |
| 2480.13.00750.138 1) | 137.5 | 232.5 | 370 |
| 2480.13.00750.150 1) | 150 | 245 | 395 |
| 2480.13.00750.160 | 160 | 255 | 415 |
| 2480.13.00750.175 1) | 175 | 270 | 445 |
| 2480.13.00750.200 | 200 | 295 | 495 |
| 2480.13.00750.225 1) | 225 | 320 | 545 |
| 2480.13.00750.250 | 250 | 345 | 595 |
| 2480.13.00750.275 | 275 | 370 | 645 |
| 2480.13.00750.300 | 300 | 395 | 695 |

Initial spring force versus charge pressure

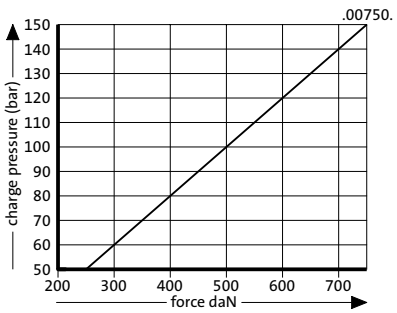


Spring force Diagram displacement versus stroke rise

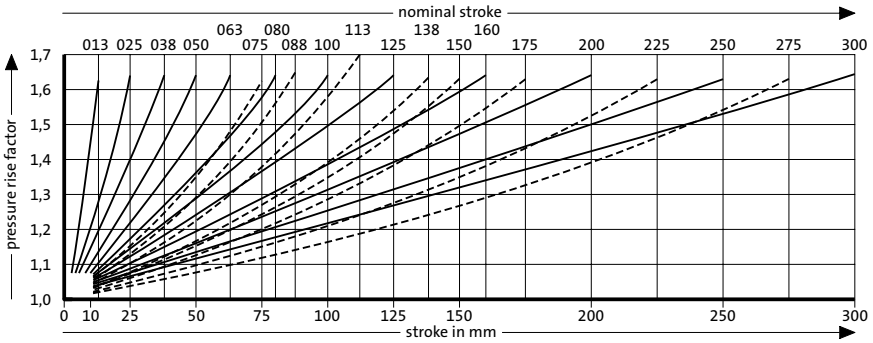


Pressure rise factor accounts for displacement but not external influences!

# GAS SPRING, STANDARD
# MOUNTING VARIATIONS

2480.007.01500

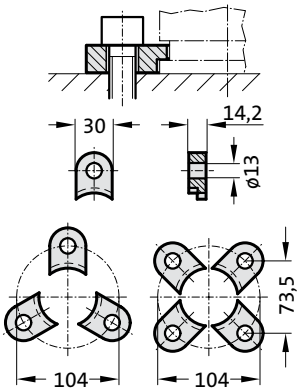


2480.008.01500 [3]

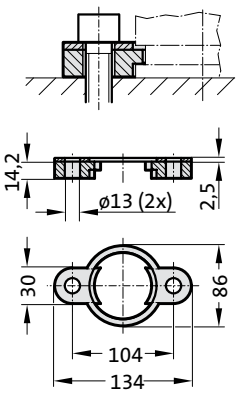


2480.010.01500.130 [3]
2480.010.01500.205* [3]

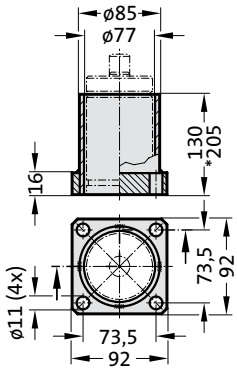


2480.011.01500

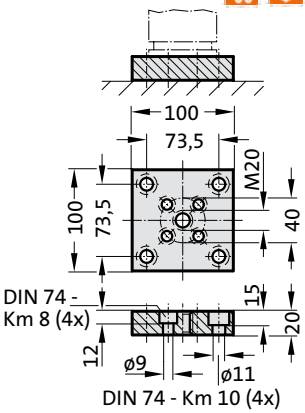


2480.011.01500.2

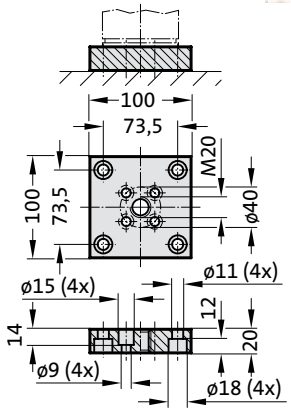


2480.022.01500

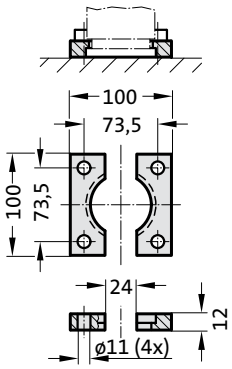


2480.044.01500 [2]

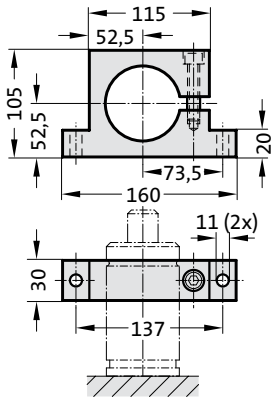


2480.044.03.01500 [2]

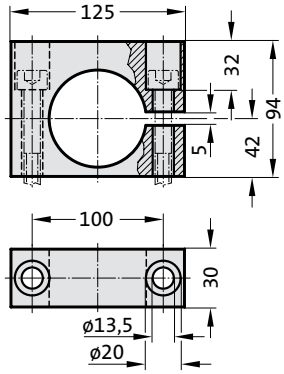


2480.045.01500 [2]

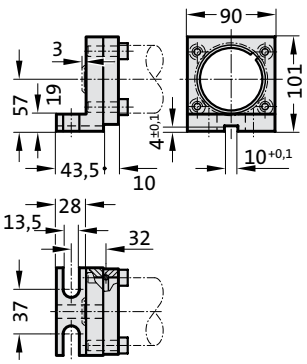


2480.047.01500 [2]

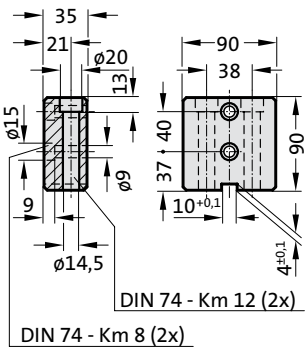


2480.055.01500

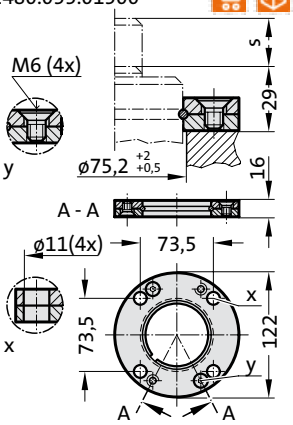


2480.057.01500

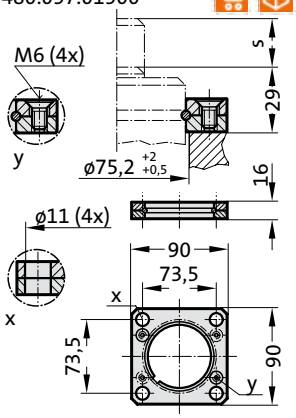


2480.064.01500 [4]

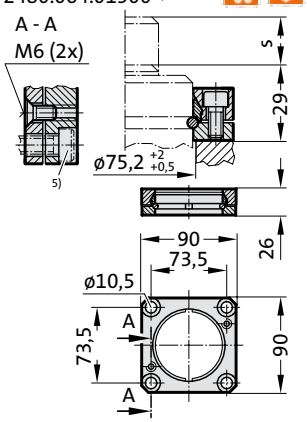


**Note:**

[2] Attention:
The spring force must be absorbed by the stop Surface!
[3] Not for use with composite connection.
[4] Square collar flange, non-rotating, fixing for composite connection.
[5] Machine screws with hexagonal socket (compact head recommended)

# GAS SPRING, STANDARD

**Note:**
Initial spring force at 150 bar = 1500 daN

Order No for spare parts kit: 2480.12.01500
Order No for spare parts kit: to Renault standard EM24.54.700 2480.12.01500.R

Gas spring without valve
Order No (example): 2480.13.01500. .P

Gas spring to Renault standard EM24.54.700
Order No (example): 2480.12.01500. .R
Gas spring to Renault standard EM24.54.700 without valve
Order No (example): 2480.13.01500. .R.P

1) Special stroke lengths
Not for gas springs to Renault Standard EM24.54.700.

Pressure medium: Nitrogen $N_2$
Max. filling pressure: 150 bar
Min. filling pressure: 25 bar
Working temperature: 0°C to +80°C
Temperature related force increase: ± 0.3%/°C
Max. recommended extensions per minute: approx. 15 to 40 (at 20°C)
Max. piston speed: 1.6 m/s
for 2480. ... .R: 2.0 m/s

## 2480.12.01500.

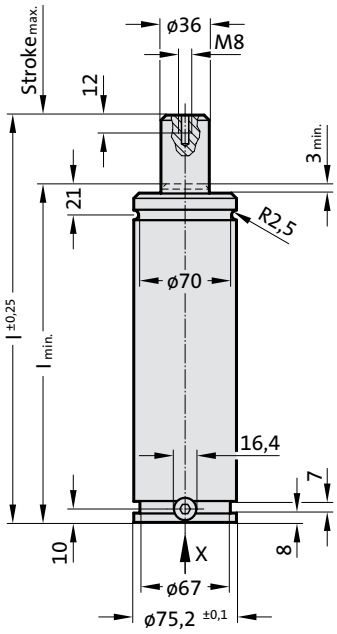


View X - Gas spring

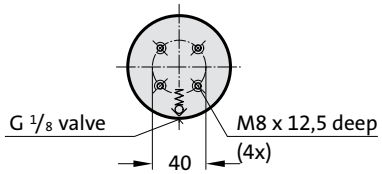

APPROVED PED 2014/68/EU | VDI | ISO

S>max | V>max | P>max | Flex Guide™

**2480.12.01500.**

**Gas spring, Standard**

| Order No | Stroke$_{max.}$ (s) | $l_{min.}$ | l |
|---|---|---|---|
| 2480.12.01500.013 1) | 12.7 | 122.3 | 135 |
| 2480.12.01500.025 | 25 | 135 | 160 |
| 2480.12.01500.038 | 38.1 | 148.1 | 186.2 |
| 2480.12.01500.050 | 50 | 160 | 210 |
| 2480.12.01500.063 | 63.5 | 173.5 | 237 |
| 2480.12.01500.075 1) | 75 | 185 | 260 |
| 2480.12.01500.080 | 80 | 190 | 270 |
| 2480.12.01500.088 1) | 87.5 | 197.5 | 285 |
| 2480.12.01500.100 | 100 | 210 | 310 |
| 2480.12.01500.113 1) | 112.5 | 222.5 | 335 |
| 2480.12.01500.125 | 125 | 235 | 360 |
| 2480.12.01500.138 1) | 137.5 | 247.5 | 385 |
| 2480.12.01500.150 1) | 150 | 260 | 410 |
| 2480.12.01500.160 | 160 | 270 | 430 |
| 2480.12.01500.175 1) | 175 | 285 | 460 |
| 2480.12.01500.200 | 200 | 310 | 510 |
| 2480.12.01500.225 1) | 225 | 335 | 560 |
| 2480.12.01500.250 | 250 | 360 | 610 |
| 2480.12.01500.275 | 275 | 385 | 660 |
| 2480.12.01500.300 | 300 | 410 | 710 |

Initial spring force
versus charge pressure

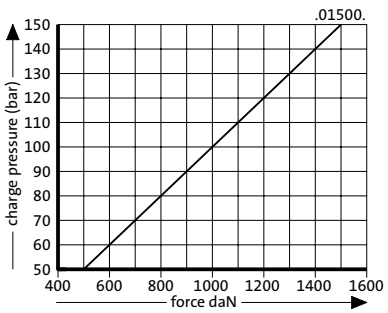


Spring force Diagram displacement versus stroke rise

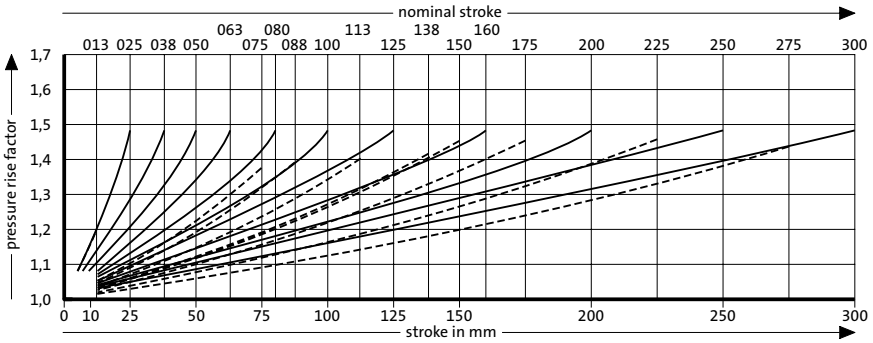


Pressure rise factor accounts for displacement but not external influences!

# GAS SPRING, STANDARD MOUNTING VARIATIONS

2480.007.03000

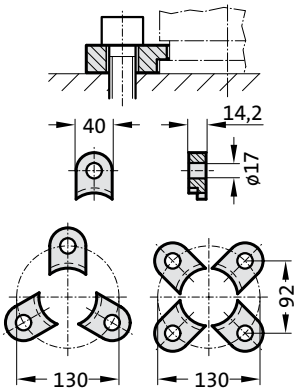


2480.008.03000 [3]

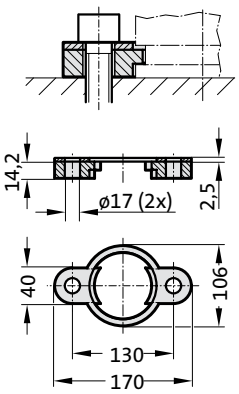


2480.010.03000.140 [3]
2480.010.03000.215* [3]

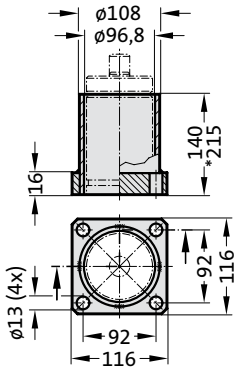


2480.011.03000

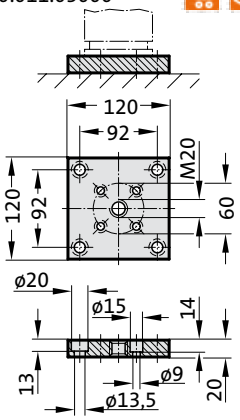


2480.011.03000.2

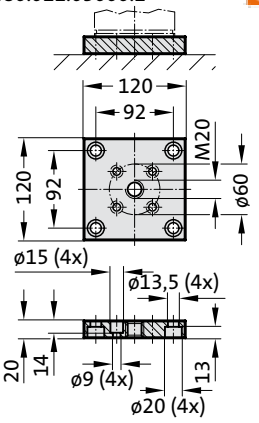


2480.022.03000

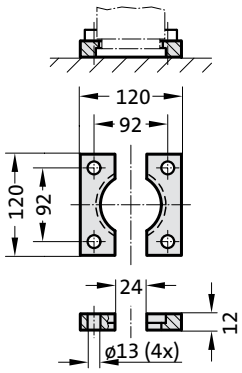


2480.044.03000 [2]

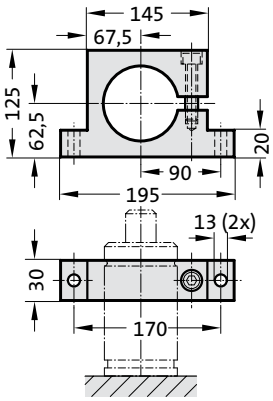


2480.044.03.03000 [2]

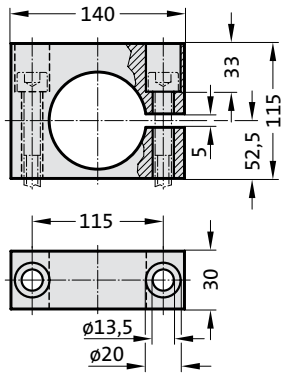


2480.045.03000 [2]

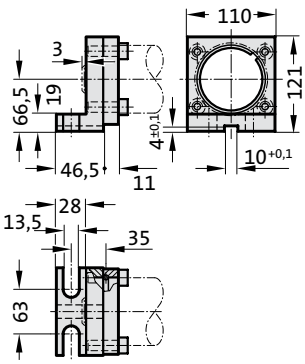


2480.047.03000 [2]

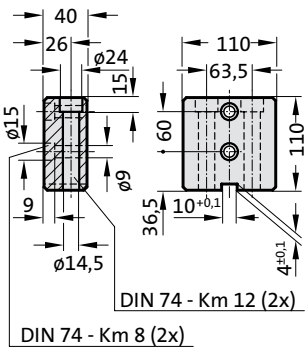


2480.055.03000

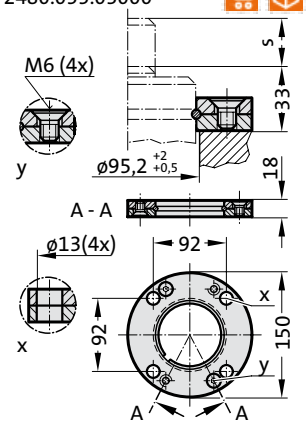


2480.057.03000

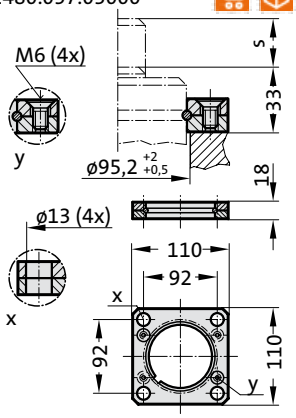


2480.064.03000 [4]

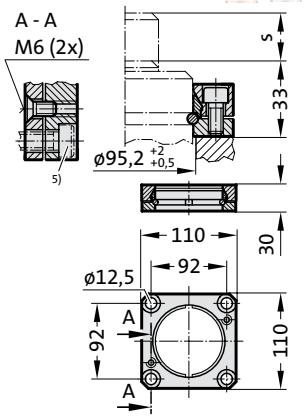


**Note:**

[2] Attention:
The spring force must be absorbed by the stop Surface!
[3] Not for use with composite connection.
[4] Square collar flange, non-rotating, fixing for composite connection.
[5] Machine screws with hexagonal socket (compact head recommended)

# GAS SPRING, STANDARD

**Note:**
Initial spring force at 150 bar = 3000 daN

Order No for spare parts kit: 2480.13.03000
Order No for spare parts kit: to Renault standard EM24.54.700 2480.13.03000.R

Gas spring without valve
Order No (example): 2480.13.03000. .P

Gas spring to Renault standard EM24.54.700
Order No (example): 2480.13.03000. .R
Gas spring to Renault standard EM24.54.700 without valve
Order No (example): 2480.13.03000. .R.P

1) Special stroke lengths
Not for gas springs to Renault Standard EM24.54.700.

Pressure medium: Nitrogen $N_2$
Max. filling pressure: 150 bar
Min. filling pressure: 25 bar
Working temperature: 0°C to +80°C
Temperature related force increase: ± 0.3%/°C
Max. recommended extensions per minute: approx. 15 to 40 (at 20°C)
Max. piston speed: 1.6 m/s
for 2480. ... .R: 2.0 m/s

## 2480.13.03000.

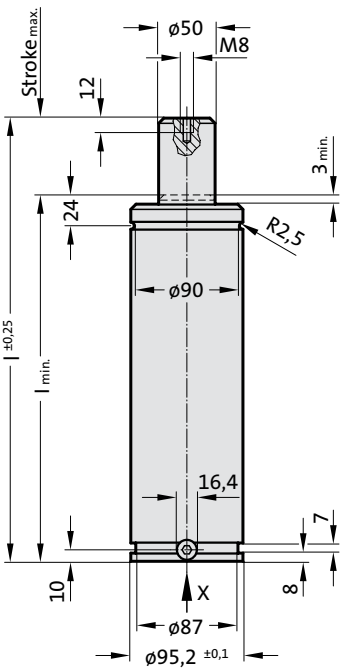


View X - Gas spring

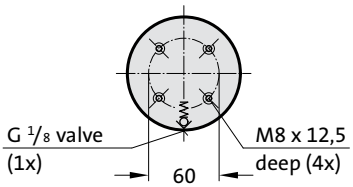

APPROVED PED 2014/68/EU | VDI | ISO

S>max | V>max | P>max | Flex Guide™

**2480.13.03000.**

**Gas spring, Standard**

| Order No | Stroke$_{max.}$ (s) | $l_{min.}$ | l |
|---|---|---|---|
| 2480.13.03000.013 1) | 12.7 | 132.3 | 145 |
| 2480.13.03000.025 | 25 | 145 | 170 |
| 2480.13.03000.038 | 38.1 | 158.1 | 196.2 |
| 2480.13.03000.050 | 50 | 170 | 220 |
| 2480.13.03000.063 | 63.5 | 183.5 | 247 |
| 2480.13.03000.075 1) | 75 | 195 | 270 |
| 2480.13.03000.080 | 80 | 200 | 280 |
| 2480.13.03000.088.11) | 87.5 | 207.5 | 295 |
| 2480.13.03000.100 | 100 | 220 | 320 |
| 2480.13.03000.113 1) | 112.5 | 232.5 | 345 |
| 2480.13.03000.125 | 125 | 245 | 370 |
| 2480.13.03000.138 1) | 137.5 | 257.5 | 395 |
| 2480.13.03000.150 1) | 150 | 270 | 420 |
| 2480.13.03000.160 | 160 | 280 | 440 |
| 2480.13.03000.175 1) | 175 | 295 | 470 |
| 2480.13.03000.200 | 200 | 320 | 520 |
| 2480.13.03000.225 1) | 225 | 345 | 570 |
| 2480.13.03000.250 | 250 | 370 | 620 |
| 2480.13.03000.275 1) | 275 | 395 | 670 |
| 2480.13.03000.300 | 300 | 420 | 720 |

Initial spring force versus charge pressure

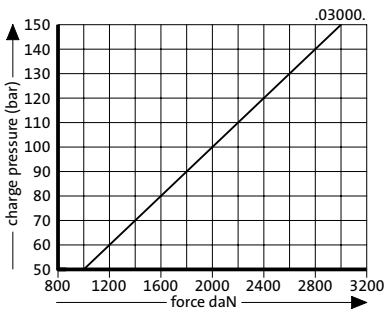


Spring force Diagram displacement versus stroke rise

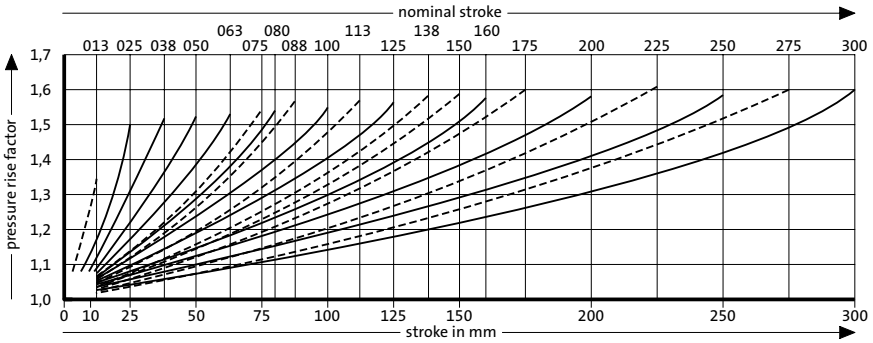


Pressure rise factor accounts for displacement but not external influences!

# GAS SPRING, STANDARD MOUNTING VARIATIONS

2480.007.05000

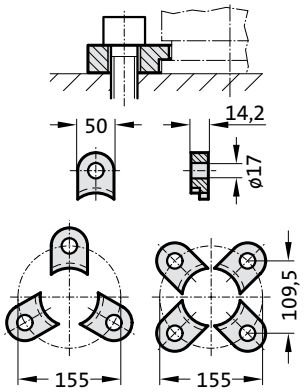


2480.008.05000 [3]

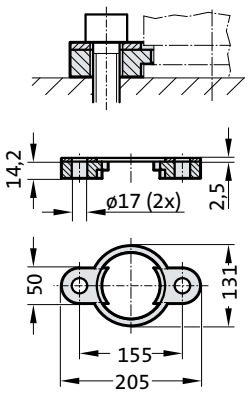


2480.010.05000.160 [3]

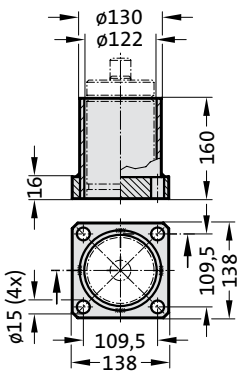


2480.011.05000

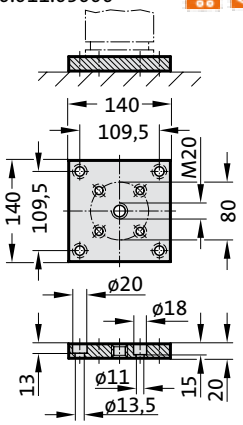


2480.011.05000.2

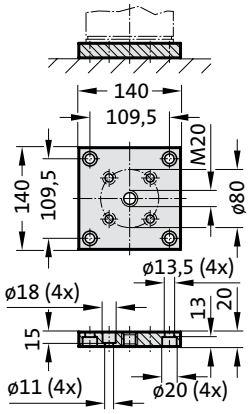


2480.022.05000

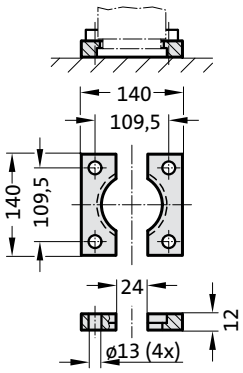


2480.044.05000 [2]

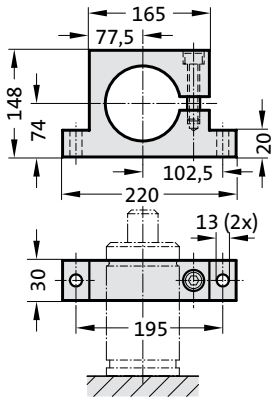


2480.044.03.05000 [2]

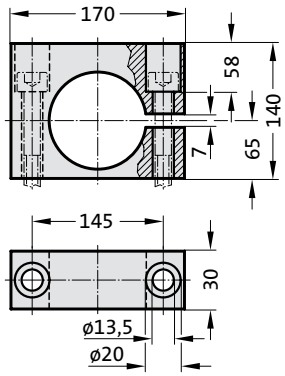


2480.045.05000 [2]

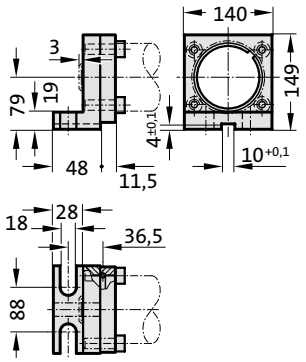


2480.047.05000 [2]

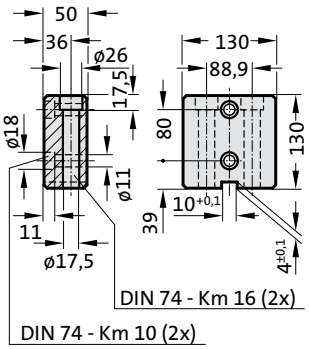


2480.055.05000

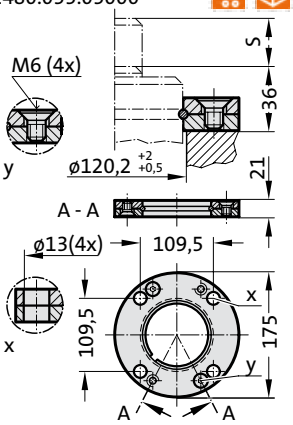


2480.057.05000

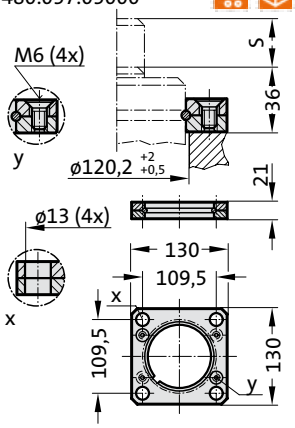


2480.064.05000 [4]

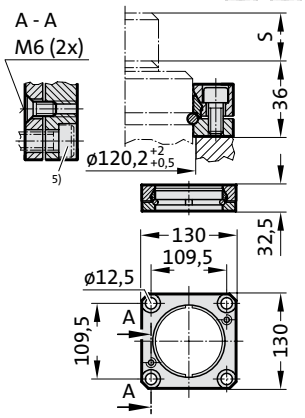


**Note:**

[2] Attention:
The spring force must be absorbed by the stop Surface!

[3] Not for use with composite connection.

[4] Square collar flange, non-rotating, fixing for composite connection.

[5] Machine screws with hexagonal socket (compact head recommended)

# GAS SPRING, STANDARD

**Note:**
Initial spring force at 150 bar = 5000 daN

Order No for spare parts kit: 2480.13.05000
Order No for spare parts kit: to Renault standard EM24.54.700 2480.13.05000.R

Gas spring without valve
Order No (example): 2480.13.05000. .P

Gas spring to Renault standard EM24.54.700
Order No (example): 2480.13.05000. .R
Gas spring to Renault standard EM24.54.700 without valve
Order No (example): 2480.13.05000. .R.P

1) Special stroke lengths
Not for gas springs to Renault Standard EM24.54.700.

Pressure medium: Nitrogen $N_2$
Max. filling pressure: 150 bar
Min. filling pressure: 25 bar
Working temperature: 0°C to +80°C
Temperature related force increase: ± 0.3%/°C
Max. recommended extensions per minute: approx. 15 to 40 (at 20°C)
Max. piston speed: 1.6 m/s
for 2480. ... .R: 2.0 m/s

## 2480.13.05000.

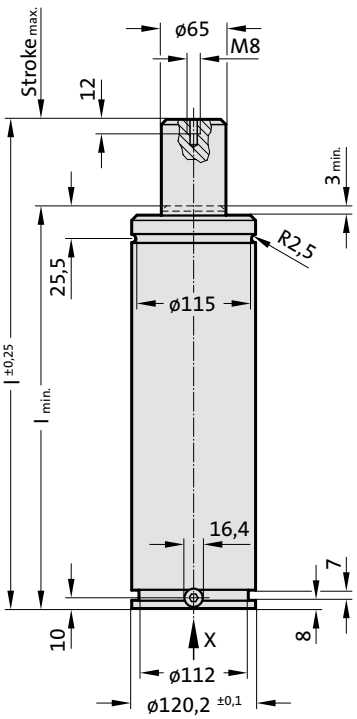


View X - Gas spring

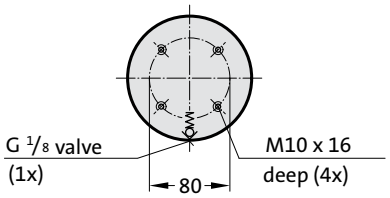

APPROVED PED 2014/68/EU | VDI | ISO

S>max | V>max | P>max | Flex Guide™

**2480.13.05000.**

**Gas spring, Standard**

| Order No | Stroke$_{max.}$ (s) | $l_{min.}$ | l |
|---|---|---|---|
| 2480.13.05000.025 | 25 | 165 | 190 |
| 2480.13.05000.038 | 38.1 | 178.1 | 216.2 |
| 2480.13.05000.050 | 50 | 190 | 240 |
| 2480.13.05000.063 | 63.5 | 203.5 | 267 |
| 2480.13.05000.075 1) | 75 | 215 | 290 |
| 2480.13.05000.080 | 80 | 220 | 300 |
| 2480.13.05000.088 1) | 87.5 | 227.5 | 315 |
| 2480.13.05000.100. | 100 | 240 | 340 |
| 2480.13.05000.113. 1) | 112.5 | 252.5 | 365 |
| 2480.13.05000.125. | 125 | 265 | 390 |
| 2480.13.05000.138. 1) | 137.5 | 277.5 | 415 |
| 2480.13.05000.150. 1) | 150 | 290 | 440 |
| 2480.13.05000.160. | 160 | 300 | 460 |
| 2480.13.05000.175. 1) | 175 | 315 | 490 |
| 2480.13.05000.200. | 200 | 340 | 540 |
| 2480.13.05000.225. 1) | 225 | 365 | 590 |
| 2480.13.05000.250. | 250 | 390 | 640 |
| 2480.13.05000.275. 1) | 275 | 415 | 690 |
| 2480.13.05000.300. | 300 | 440 | 740 |

Initial spring force
versus charge pressure

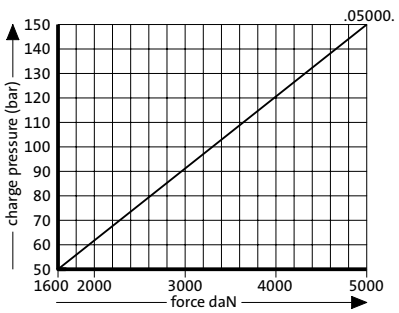


Spring force Diagram displacement versus stroke rise

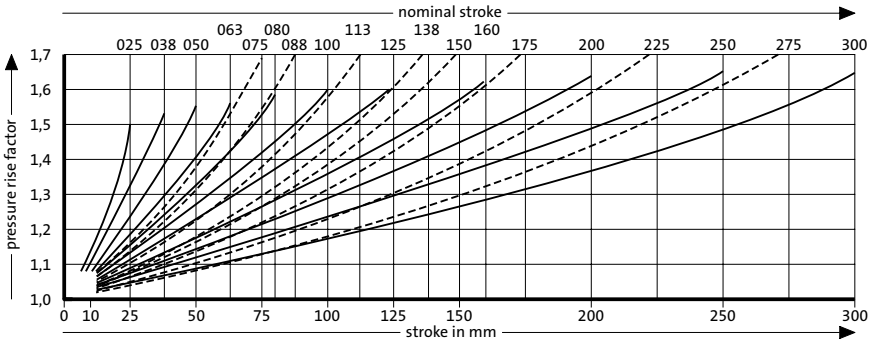


Pressure rise factor accounts for displacement but not external influences!

# GAS SPRING, STANDARD
# MOUNTING VARIATIONS

2480.007.07500

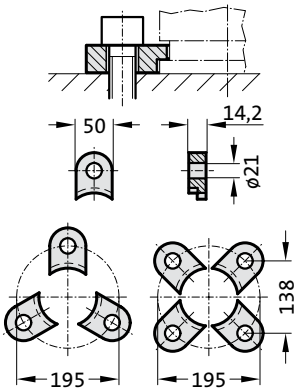


2480.008.07500 3)

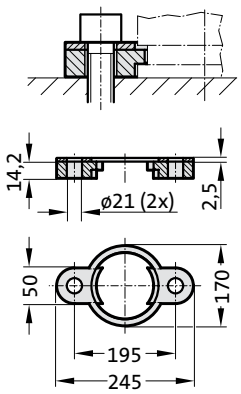


2480.011.07500

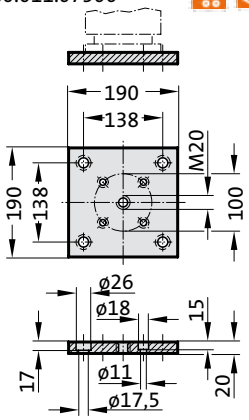


2480.011.07500.2

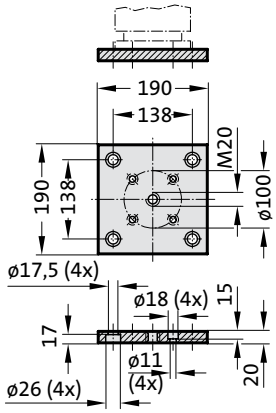


2480.011.03.07500

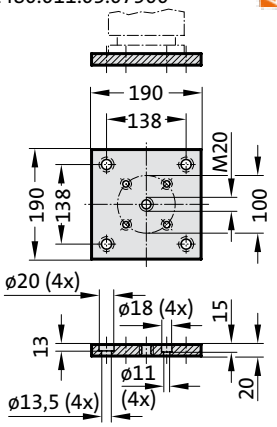


2480.011.03.07500.2

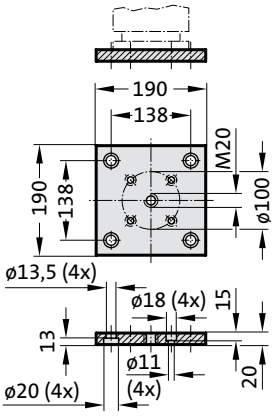


2480.022.07500

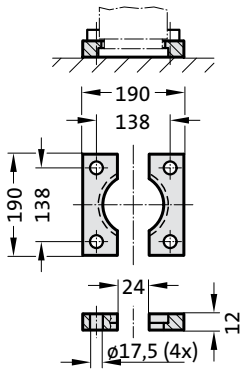


2480.044.07500 2)

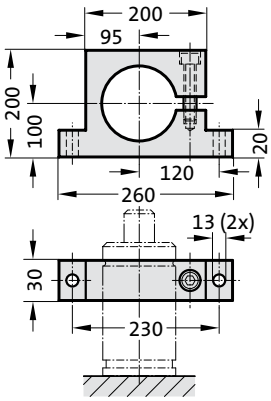


2480.044.03.07500 2)

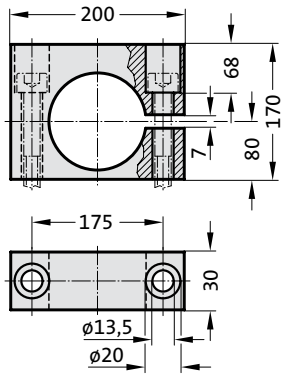


2480.055.07500

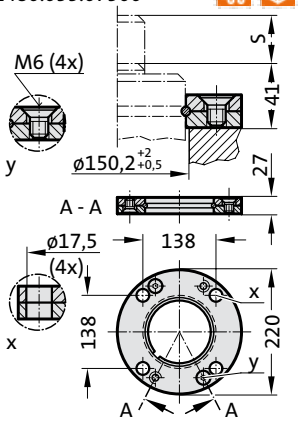


2480.057.07500

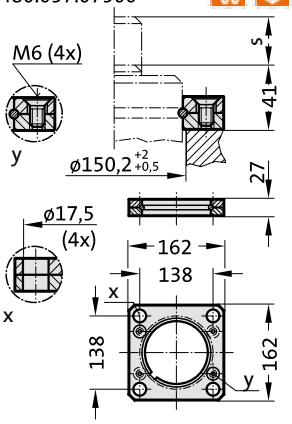


2480.064.07500 4)

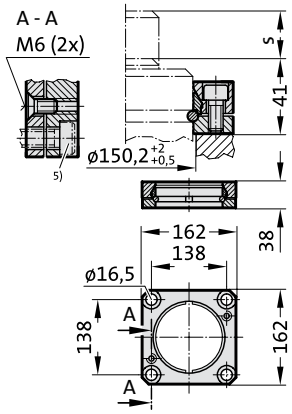


**Note:**

2) Attention:
The spring force must be absorbed by the stop Surface!

3) Not for use with composite connection.

4) Square collar flange, non-rotating, fixing for composite connection.

5) Machine screws with hexagonal socket (compact head recommended)

# GAS SPRING, STANDARD

**Note:**
Initial spring force at 150 bar = 7500 daN

Order No for spare parts kit: 2480.13.07500
Order No for spare parts kit: to Renault standard EM24.54.700 2480.13.07500.R

Gas spring without valve
Order No (example): 2480.13.07500. .P

Gas spring to Renault standard EM24.54.700
Order No (example): 2480.13.07500. .R
Gas spring to Renault standard EM24.54.700 without valve
Order No (example): 2480.13.07500. .R.P

1) Special stroke lengths
Not for gas springs to Renault Standard EM24.54.700.

Pressure medium: Nitrogen $N_2$
Max. filling pressure: 150 bar
Min. filling pressure: 25 bar
Working temperature: 0°C to +80°C
Temperature related force increase: ± 0.3%/°C
Max. recommended extensions per minute: approx. 15 to 40 (at 20°C)
Max. piston speed: 1.6 m/s
for 2480. ... .R: 2.0 m/s

## 2480.13.07500.

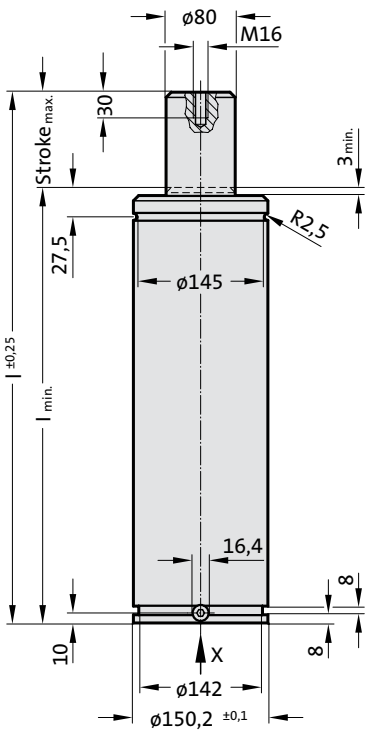


View X - Gas spring

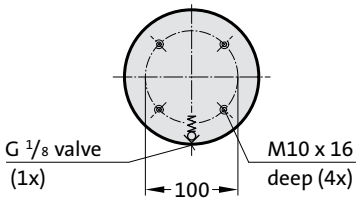

APPROVED PED 2014/68/EU | VDI | ISO

S>max | V>max | P>max | Flex Guide™

**2480.13.07500.**

**Gas spring, Standard**

| Order No | Stroke$_{max.}$ (s) | $l_{min.}$ | l |
|---|---|---|---|
| 2480.13.07500.025 | 25 | 180 | 205 |
| 2480.13.07500.038 | 38.1 | 193.1 | 231.2 |
| 2480.13.07500.050 | 50 | 205 | 255 |
| 2480.13.07500.063 | 63.5 | 218.5 | 282 |
| 2480.13.07500.075 1) | 75 | 230 | 305 |
| 2480.13.07500.080 | 80 | 235 | 315 |
| 2480.13.07500.088 1) | 87.5 | 242.5 | 330 |
| 2480.13.07500.100. | 100 | 255 | 355 |
| 2480.13.07500.113. 1) | 112.5 | 267.5 | 380 |
| 2480.13.07500.125. | 125 | 280 | 405 |
| 2480.13.07500.138. 1) | 137.5 | 292.5 | 430 |
| 2480.13.07500.150. 1) | 150 | 305 | 455 |
| 2480.13.07500.160. | 160 | 315 | 475 |
| 2480.13.07500.175. 1) | 175 | 330 | 505 |
| 2480.13.07500.200. | 200 | 355 | 555 |
| 2480.13.07500.225. 1) | 225 | 380 | 605 |
| 2480.13.07500.250. | 250 | 405 | 655 |
| 2480.13.07500.275. 1) | 275 | 430 | 705 |
| 2480.13.07500.300. | 300 | 455 | 755 |

Initial spring force
versus charge pressure

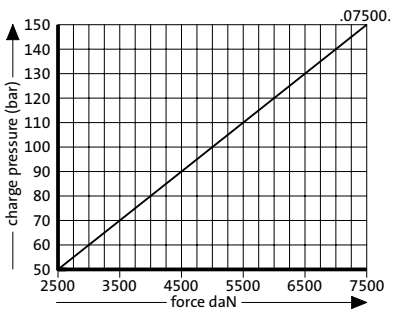


Spring force Diagram displacement versus stroke rise

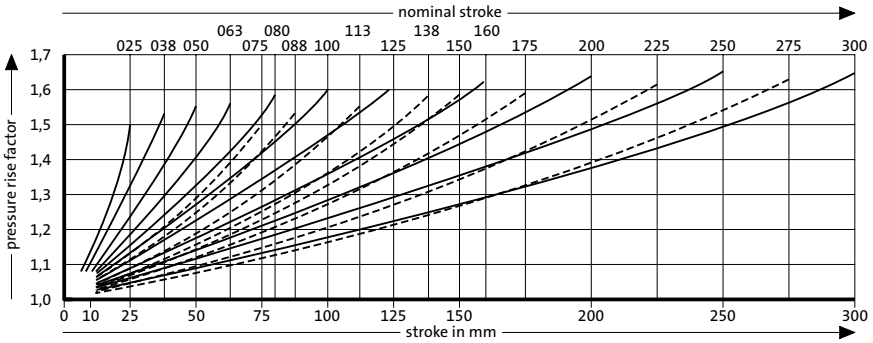


Pressure rise factor accounts for displacement but not external influences!

# GAS SPRING, STANDARD
# MOUNTING VARIATIONS

2480.007.10000

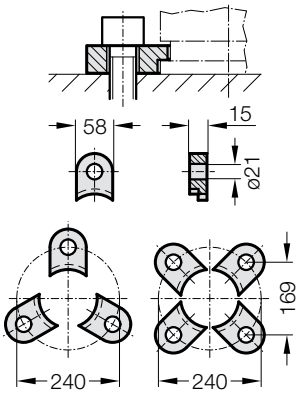


2480.011.10000

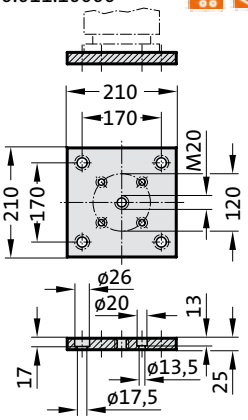


2480.011.10000.2

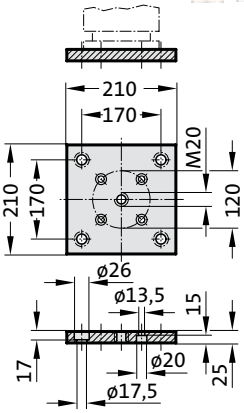


2480.022.10000

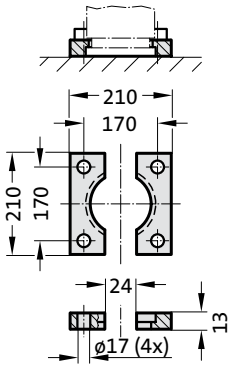


2480.057.10000

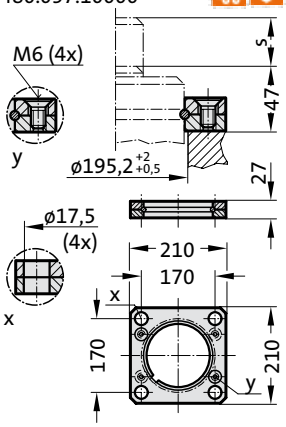




subject to alterations

# GAS SPRING, STANDARD

**Note:**
Initial spring force at 150 bar = 10000 daN

Order No for spare parts kit: 2480.12.10000

Gas spring without valve
Order No (example): 2480.12.10000. .P

Gas spring to Renault standard EM24.54.700
Order No (example): 2480.12.10000. .R
Gas spring to Renault standard EM24.54.700 without valve
Order No (example): 2480.12.10000. .R.P

Pressure medium: Nitrogen $N_2$
Max. filling pressure: 150 bar
Min. filling pressure: 25 bar
Working temperature: 0°C to +80°C
Temperature related force increase: ± 0.3%/°C
Max. recommended extensions per minute: approx. 15 to 40 (at 20°C)
Max. piston speed: 1.6 m/s

## 2480.12.10000.

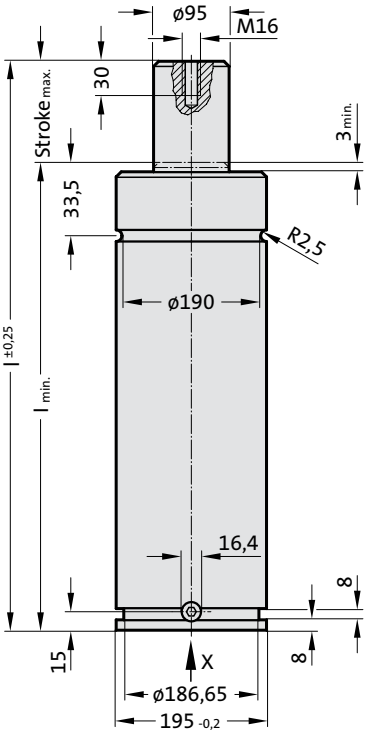


View X - Gas spring

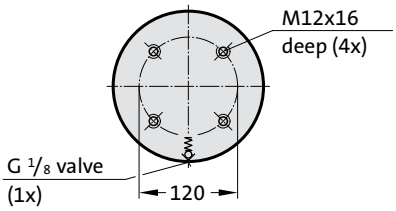

APPROVED PED 2014/68/EU | VDI | ISO

S>max | V>max | P>max | Flex Guide™

**2480.12.10000.**

**Gas spring, Standard**

| Order No | Stroke$_{max.}$ (s) | $l_{min.}$ | l |
|---|---|---|---|
| 2480.12.10000.025 | 25 | 185 | 210 |
| 2480.12.10000.038 | 38.1 | 198.1 | 236.2 |
| 2480.12.10000.050 | 50 | 210 | 260 |
| 2480.12.10000.063 | 63.5 | 223.5 | 287 |
| 2480.12.10000.080 | 80 | 240 | 320 |
| 2480.12.10000.100 | 100 | 260 | 360 |
| 2480.12.10000.125 | 125 | 285 | 410 |
| 2480.12.10000.160 | 160 | 320 | 480 |
| 2480.12.10000.200 | 200 | 360 | 560 |
| 2480.12.10000.250 | 250 | 410 | 660 |
| 2480.12.10000.300 | 300 | 460 | 760 |

Initial spring force
versus charge pressure

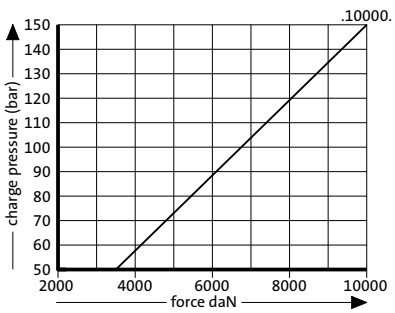


Spring force Diagram displacement versus stroke rise

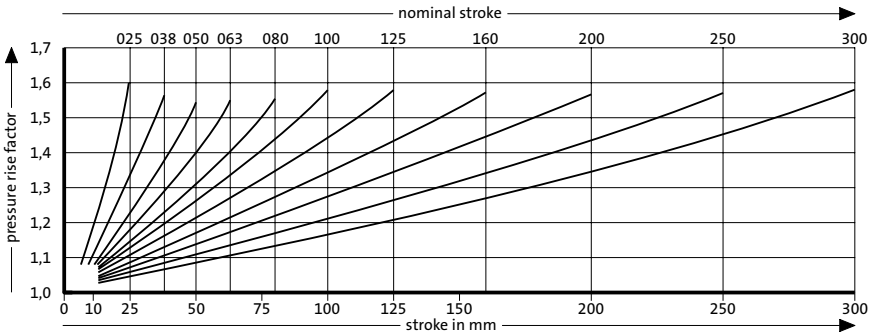


Pressure rise factor accounts for displacement but not external influences!

# GAS SPRINGS HEAVY DUTY

# GAS SPRING HEAVY DUTY
# MOUNTING VARIATIONS

2480.007.00500

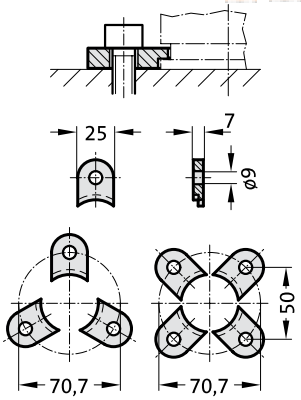


2480.008.00500 [3]

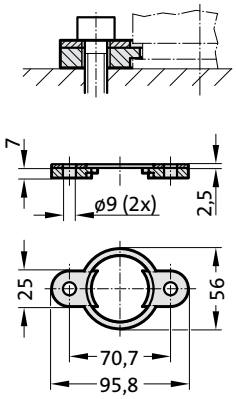


2480.010.00500.095 [3]
2480.010.00500.180* [3]

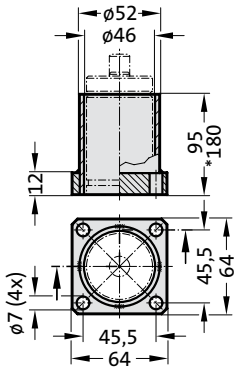


2480.011.00500

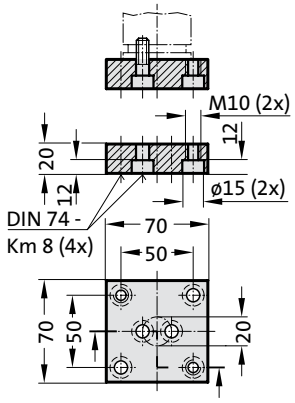


2480.011.00500.1

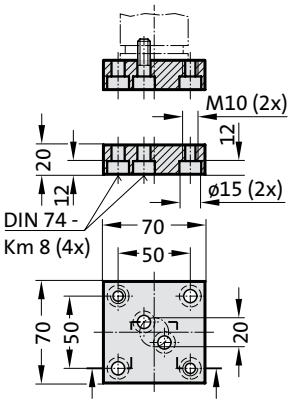


2480.011.00500.2

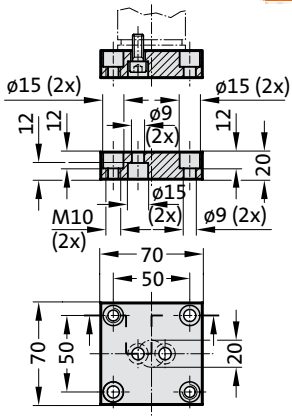


2480.022.00500

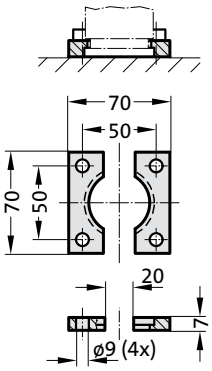


2480.044.00500 [2]

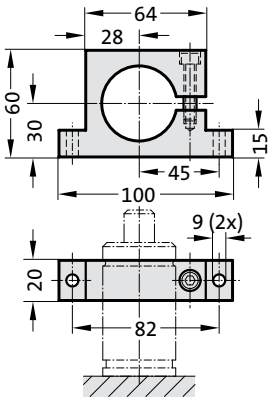


2480.044.03.00500 [2]

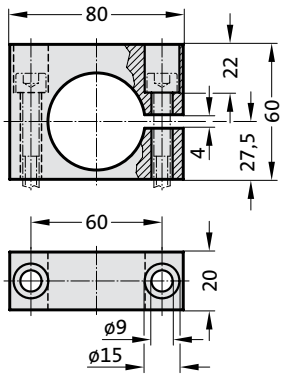


2480.055.00500

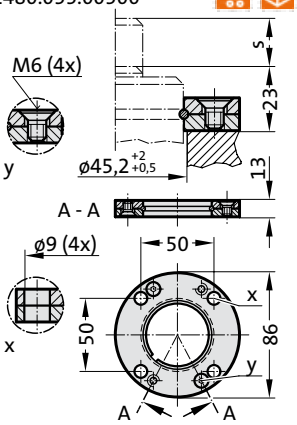


2480.057.00500

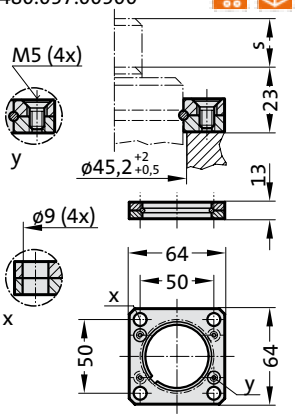


2480.064.00500 [4]

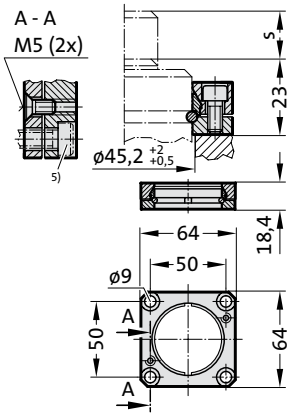


**Note:**

[2] Attention:
The spring force must be absorbed by the stop Surface!
[3] Not for use with composite connection.
[4] Square collar flange, non-rotating, fixing for composite connection.
[5] Machine screws with hexagonal socket (compact head recommended)

# GAS SPRING HEAVY DUTY

**Note:**
Initial spring force at 150 bar = 740 daN

Order No for spare parts kit: 2488.13.00750

Gas spring without valve
Order No (example): 2488.13.00750. .P

Pressure medium: Nitrogen $N_2$
Max. filling pressure: 150 bar
Min. filling pressure: 25 bar
Working temperature: 0°C to +80°C
Temperature related force increase: ± 0.3%/°C
Max. recommended extensions per minute:
approx. 15 to 100 (at 20°C)
Max. piston speed: 1.6 m/s

2488.13.00750.

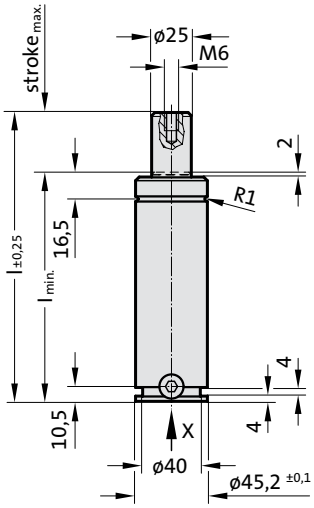

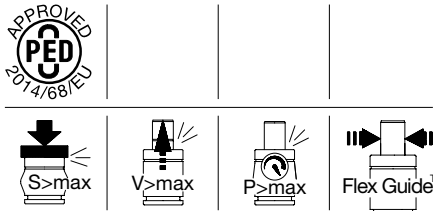


View X

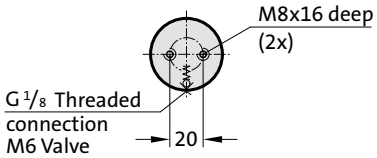


**2488.13.00750.**

**Gas spring HEAVY DUTY**

| Order No | $Stroke_{max.}$ (s) | $l_{min.}$ | l |
|---|---|---|---|
| 2488.13.00750.013 | 13 | 98 | 111 |
| 2488.13.00750.025 | 25 | 110 | 135 |
| 2488.13.00750.038 | 38 | 123 | 161 |
| 2488.13.00750.050 | 50 | 135 | 185 |
| 2488.13.00750.063 | 63 | 148 | 211 |
| 2488.13.00750.075 | 75 | 160 | 235 |
| 2488.13.00750.080 | 80 | 165 | 245 |
| 2488.13.00750.100. | 100 | 185 | 285 |
| 2488.13.00750.125. | 125 | 210 | 335 |
| 2488.13.00750.150. | 150 | 235 | 385 |
| 2488.13.00750.160. | 160 | 245 | 405 |
| 2488.13.00750.175. | 175 | 260 | 435 |
| 2488.13.00750.200. | 200 | 285 | 485 |

Initial spring force
versus charge pressure

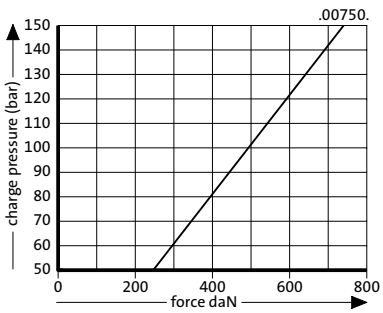


Spring force Diagram displacement versus stroke rise

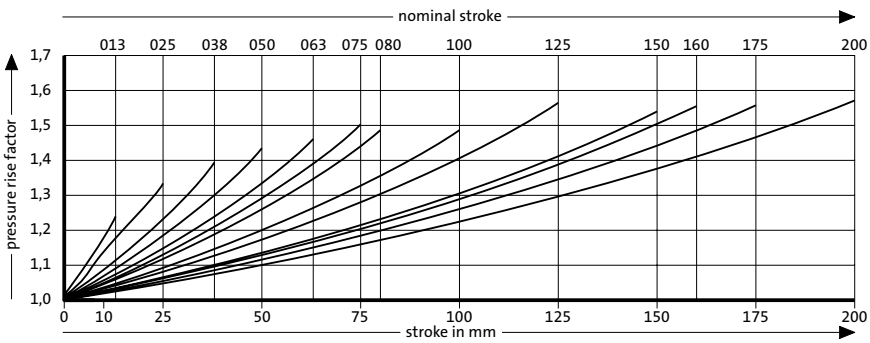


Pressure rise factor accounts for displacement but not external influences!

# GAS SPRING HEAVY DUTY
# MOUNTING VARIATIONS

2480.007.00750

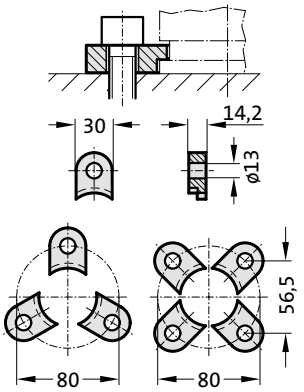


2480.008.00750 [3]

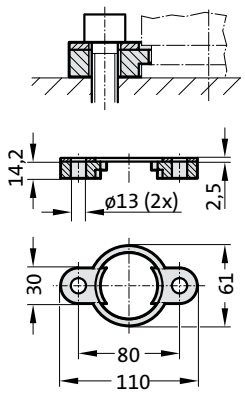


2480.010.00750.115 [3]
2480.010.00750.190* [3]

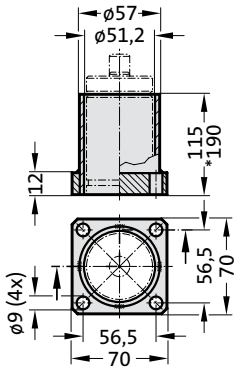


2480.011.00750

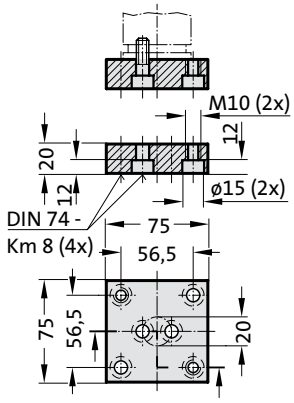


2480.011.00750.1

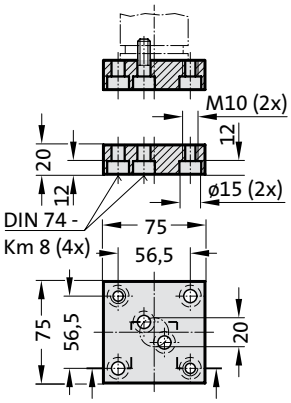


2480.011.00750.3

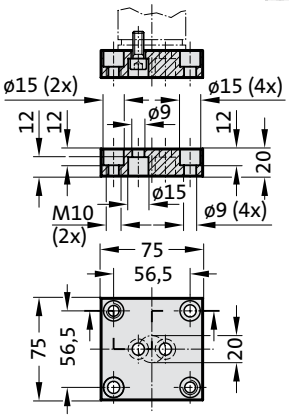


2480.022.00750

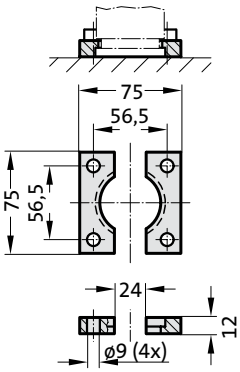


2480.044.00750 [2]

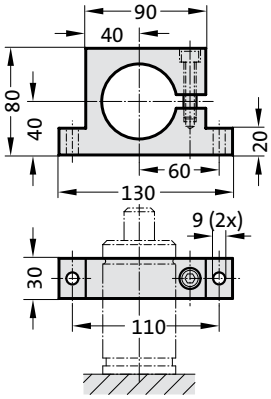


2480.044.03.00750 [2]

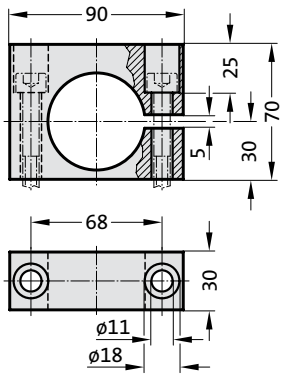


2480.045.00750 [2]

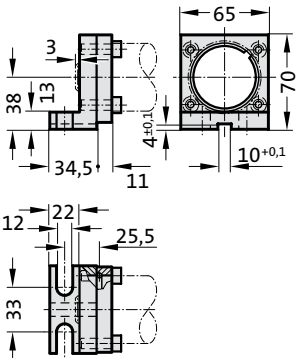


2480.047.00750 [2]

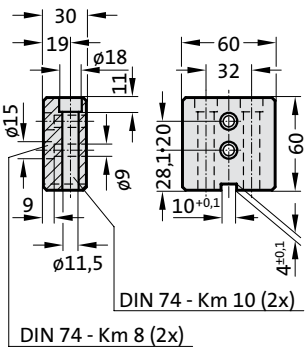


2480.055.00750

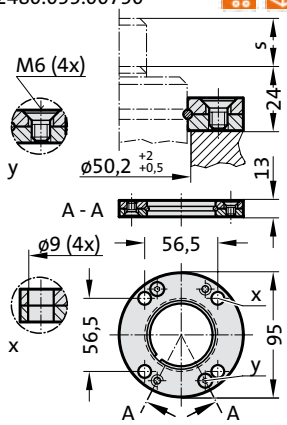


2480.057.00750

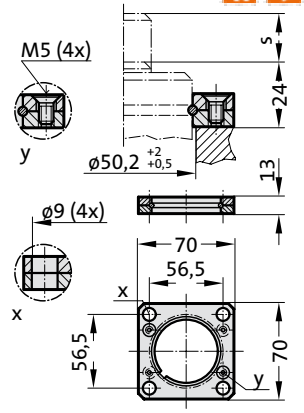


2480.064.00750 [4]

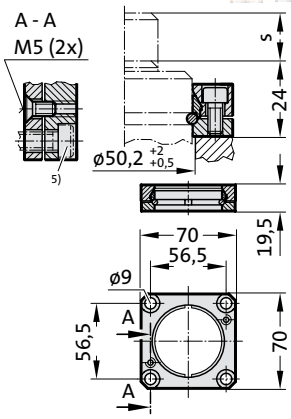


**Note:**

[2] Attention:
The spring force must be absorbed by the stop Surface!
[3] Not for use with composite connection.
[4] Square collar flange, non-rotating, fixing for composite connection.
[5] Machine screws with hexagonal socket (compact head recommended)

# GAS SPRING HEAVY DUTY

**Note:**
Initial spring force at 150 bar = 920 daN

Order No for spare parts kit: 2488.13.01000

Gas spring without valve
Order No (example): 2488.13.01000. .P

Pressure medium: Nitrogen $N_2$
Max. filling pressure: 150 bar
Min. filling pressure: 25 bar
Working temperature: 0°C to +80°C
Temperature related force increase: ± 0.3%/°C
Max. recommended extensions per minute:
approx. 15 to 100 (at 20°C)
Max. piston speed: 1.6 m/s

## 2488.13.01000.

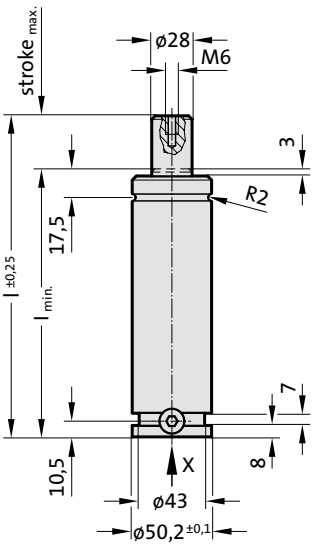


View X

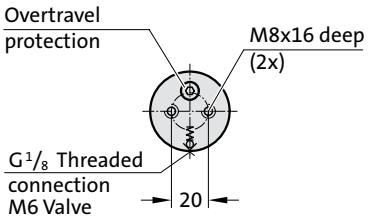

APPROVED PED 2014/68/EU | VDI | ISO

S>max | V>max | P>max | Flex Guide™

**2488.13.01000.**

**Gas spring HEAVY DUTY**

| Order No | Stroke$_{max.}$ (s) | $l_{min.}$ | l |
|---|---|---|---|
| 2488.13.01000.013 | 13 | 108 | 121 |
| 2488.13.01000.025 | 25 | 120 | 145 |
| 2488.13.01000.038 | 38 | 133 | 171 |
| 2488.13.01000.050 | 50 | 145 | 195 |
| 2488.13.01000.063 | 63 | 158 | 221 |
| 2488.13.01000.075 | 75 | 170 | 245 |
| 2488.13.01000.080 | 80 | 175 | 255 |
| 2488.13.01000.100 | 100 | 195 | 295 |
| 2488.13.01000.125 | 125 | 220 | 345 |
| 2488.13.01000.150 | 150 | 245 | 395 |
| 2488.13.01000.160 | 160 | 255 | 415 |
| 2488.13.01000.175 | 175 | 270 | 445 |
| 2488.13.01000.200 | 200 | 295 | 495 |
| 2488.13.01000.250 | 250 | 345 | 595 |
| 2488.13.01000.300 | 300 | 395 | 695 |

Initial spring force
versus charge pressure

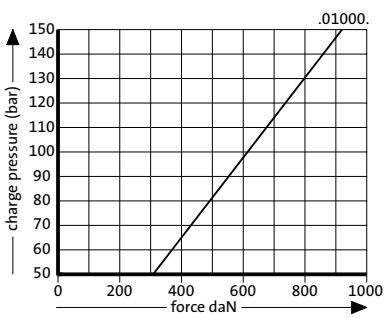


Spring force Diagram displacement versus stroke rise

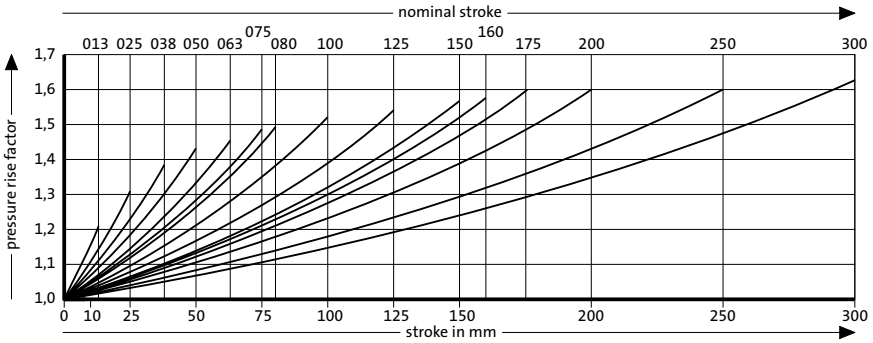


Pressure rise factor accounts for displacement but not external influences!

# GAS SPRING HEAVY DUTY
# MOUNTING VARIATIONS

2480.007.01000

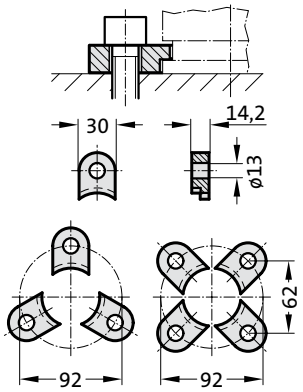


2480.011.01000

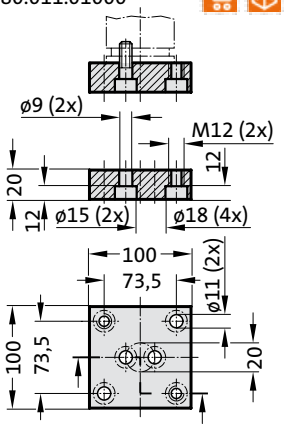


2480.011.01000.2

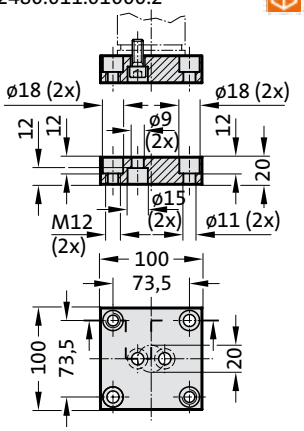


2480.022.01000

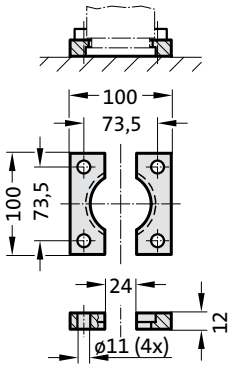


2480.044.03.01000 [2]

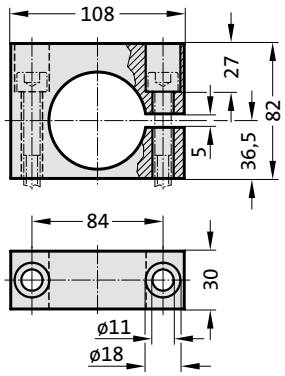


2480.057.01000

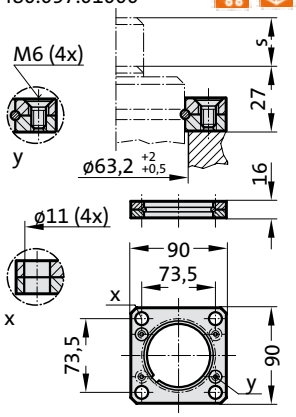


2480.057.03.01000

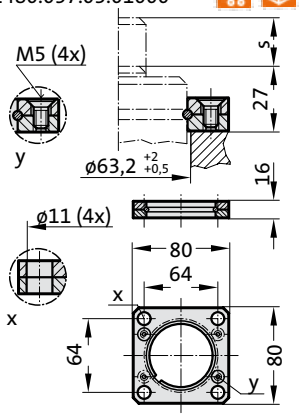


2480.064.01000 [4]

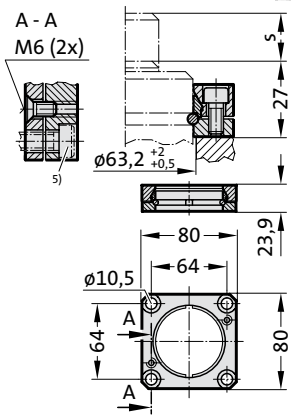


**Note:**

[2] Attention:
The spring force must be absorbed by the stop Surface!

[4] Square collar flange, non-rotating, fixing for composite connection.

[5] Machine screws with hexagonal socket (compact head recommended)

# GAS SPRING HEAVY DUTY

**Note:**
Initial spring force at 150 bar = 1500 daN

Order No for spare parts kit: 2488.13.01500

Gas spring without valve
Order No (example): 2488.13.01500. .P

Pressure medium: Nitrogen $N_2$
Max. filling pressure: 150 bar
Min. filling pressure: 25 bar
Working temperature: 0°C to +80°C
Temperature related force increase: ± 0.3%/°C
Max. recommended extensions per minute:
approx. 15 to 100 (at 20°C)
Max. piston speed: 1.6 m/s

## 2488.13.01500.

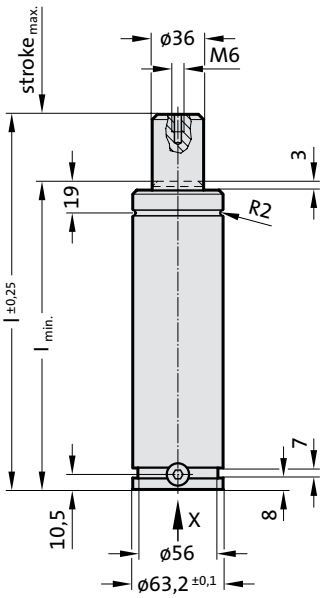


View X

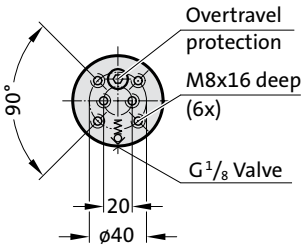

APPROVED PED 2014/68/EU

S>max | V>max | P>max | Flex Guide™

**2488.13.01500.**

**Gas spring HEAVY DUTY**

| Order No | $Stroke_{max.}$ (s) | $l_{min.}$ | l |
|---|---|---|---|
| 2488.13.01500.013 | 13 | 108 | 121 |
| 2488.13.01500.025 | 25 | 120 | 145 |
| 2488.13.01500.038 | 38 | 133 | 171 |
| 2488.13.01500.050 | 50 | 145 | 195 |
| 2488.13.01500.063 | 63 | 158 | 221 |
| 2488.13.01500.075 | 75 | 170 | 245 |
| 2488.13.01500.080 | 80 | 175 | 255 |
| 2488.13.01500.100 | 100 | 195 | 295 |
| 2488.13.01500.125 | 125 | 220 | 345 |
| 2488.13.01500.150 | 150 | 245 | 395 |
| 2488.13.01500.160 | 160 | 255 | 415 |
| 2488.13.01500.175 | 175 | 270 | 445 |
| 2488.13.01500.200 | 200 | 295 | 495 |
| 2488.13.01500.250 | 250 | 345 | 595 |
| 2488.13.01500.300 | 300 | 395 | 695 |

Initial spring force
versus charge pressure

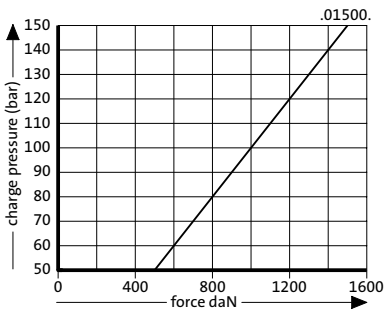


Spring force Diagram displacement versus stroke rise

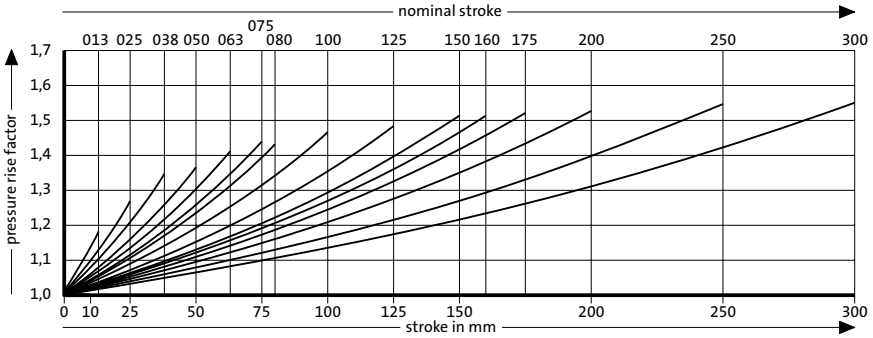


Pressure rise factor accounts for displacement but not external influences!

# GAS SPRING HEAVY DUTY
# MOUNTING VARIATIONS

2480.007.01500

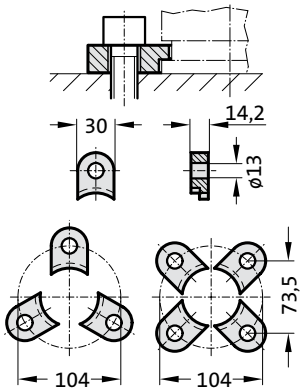


2480.008.01500 [3]

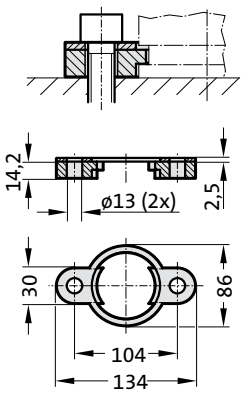


2480.010.01500.130 [3]
2480.010.01500.205* [3]

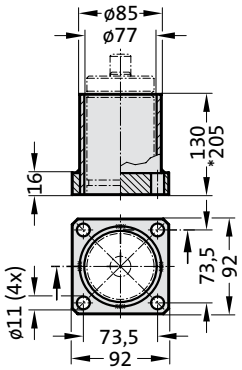


2480.011.01500

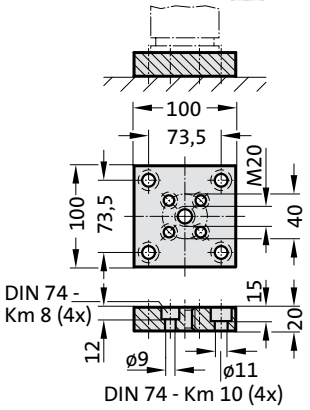


2480.011.01500.2

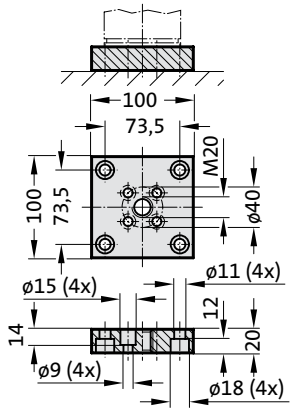


2480.022.01500

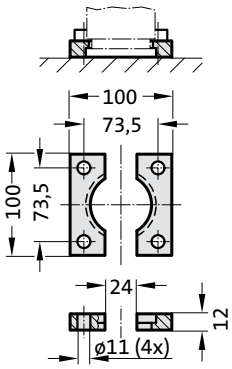


2480.044.01500 [2]

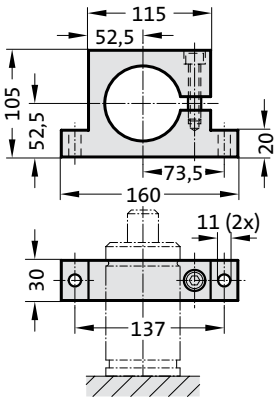


2480.044.03.01500 [2]

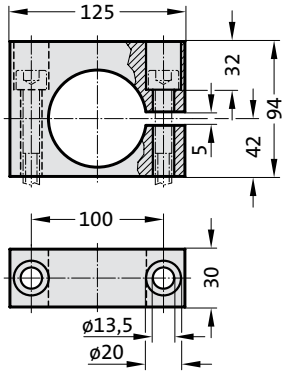


2480.045.01500 [2]

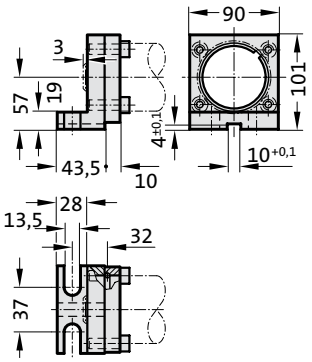


2480.047.01500 [2]

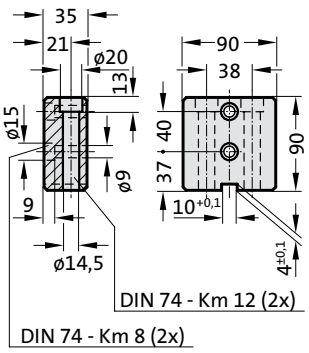


2480.055.01500

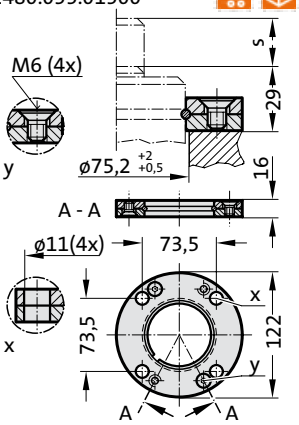


2480.057.01500

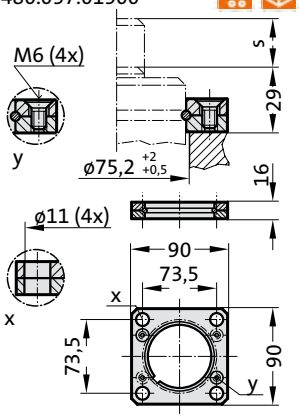


2480.064.01500 [4]

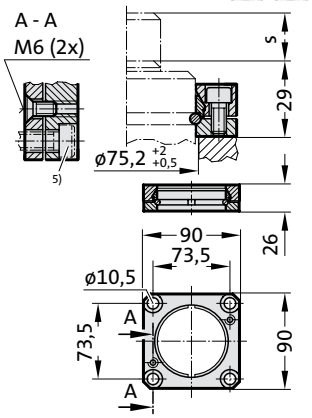


**Note:**

[2] Attention:
The spring force must be absorbed by the stop Surface!
[3] Not for use with composite connection.
[4] Square collar flange, non-rotating, fixing for composite connection.
[5] Machine screws with hexagonal socket (compact head recommended)

# GAS SPRING HEAVY DUTY

**Note:**
Initial spring force at 150 bar = 2400 daN

Order No for spare parts kit: 2488.13.02400

Gas spring without valve
Order No (example): 2488.13.02400. .P

Pressure medium: Nitrogen $N_2$
Max. filling pressure: 150 bar
Min. filling pressure: 25 bar
Working temperature: 0°C to +80°C
Temperature related force increase: ± 0.3%/°C
Max. recommended extensions per minute:
approx. 15 to 100 (at 20°C)
Max. piston speed: 1.6 m/s

**2488.13.02400.**

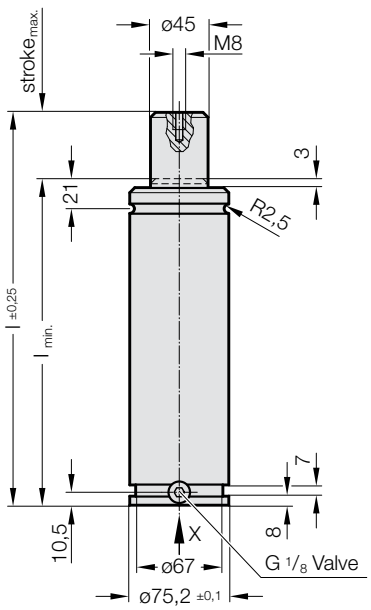


View X

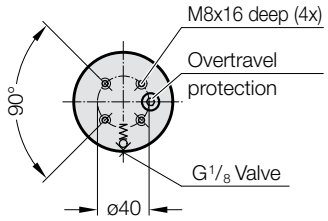

APPROVED PED 2014/68/EU | VDI | ISO

S>max | V>max | P>max | Flex Guide™

**2488.13.02400.**

**Gas spring HEAVY DUTY**

| Order No | Stroke$_{max.}$ (s) | $l_{min.}$ | l |
|---|---|---|---|
| 2488.13.02400.025 | 25 | 135 | 160 |
| 2488.13.02400.038 | 38 | 148 | 186 |
| 2488.13.02400.050 | 50 | 160 | 210 |
| 2488.13.02400.063 | 63 | 173 | 236 |
| 2488.13.02400.075 | 75 | 185 | 260 |
| 2488.13.02400.080 | 80 | 190 | 270 |
| 2488.13.02400.100 | 100 | 210 | 310 |
| 2488.13.02400.125 | 125 | 235 | 360 |
| 2488.13.02400.150 | 150 | 260 | 410 |
| 2488.13.02400.160 | 160 | 270 | 430 |
| 2488.13.02400.175 | 175 | 285 | 460 |
| 2488.13.02400.200 | 200 | 310 | 510 |
| 2488.13.02400.250 | 250 | 360 | 610 |
| 2488.13.02400.300 | 300 | 410 | 710 |

Initial spring force
versus charge pressure

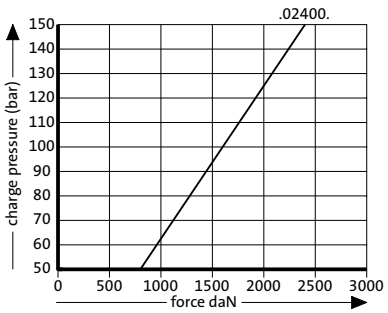


Spring force Diagram displacement versus stroke rise

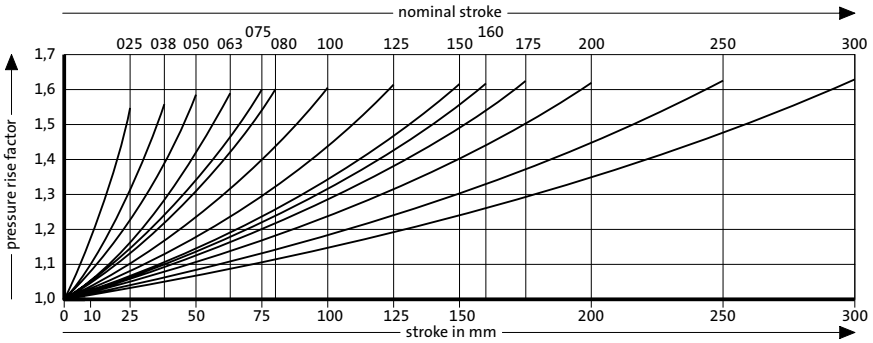


Pressure rise factor accounts for displacement but not external influences!

# GAS SPRING HEAVY DUTY
# MOUNTING VARIATIONS

2480.007.03000

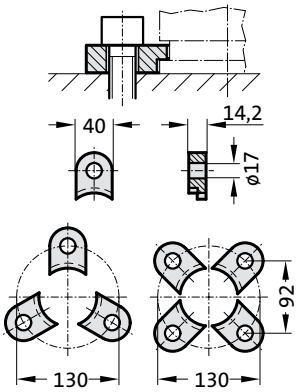


2480.008.03000 [3]

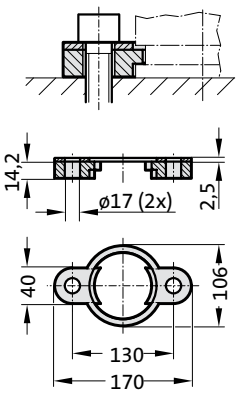


2480.010.03000.140 [3]
2480.010.03000.215* [3]

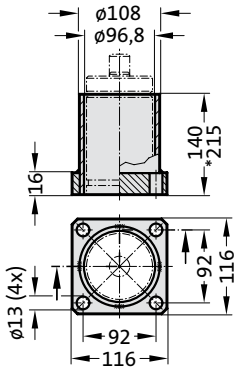


2480.011.03000

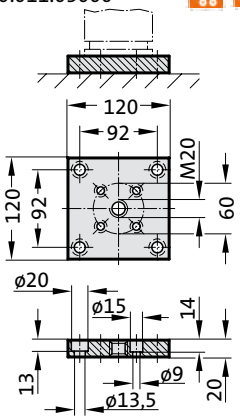


2480.011.03000.2

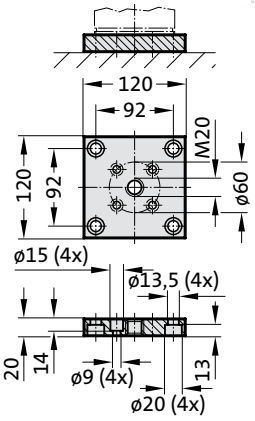


2480.022.03000

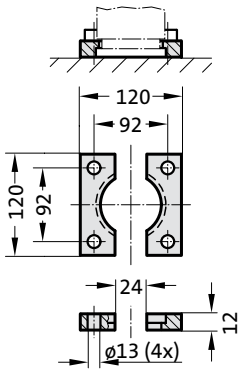


2480.044.03000 [2]

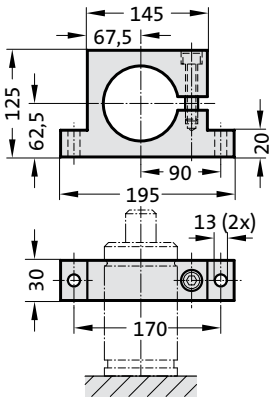


2480.044.03.03000 [2]

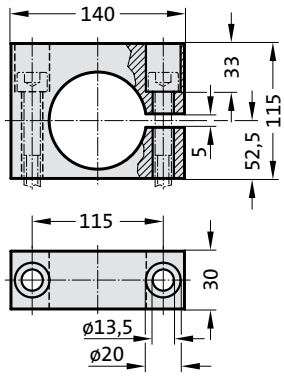


2480.045.03000 [2]

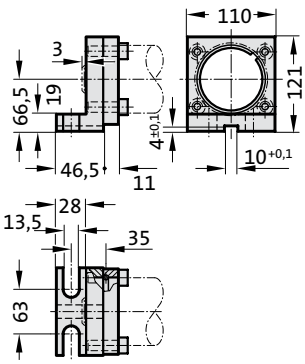


2480.047.03000 [2]

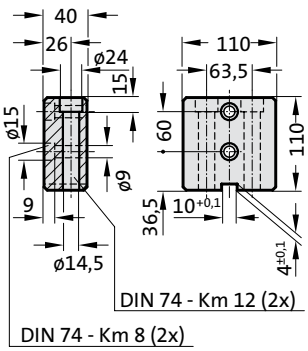


2480.055.03000

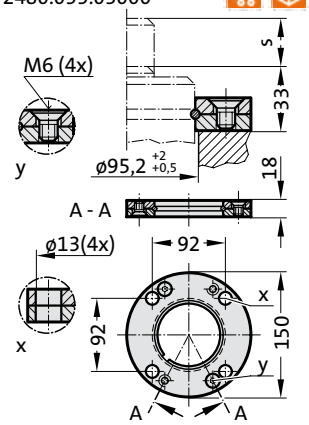


2480.057.03000

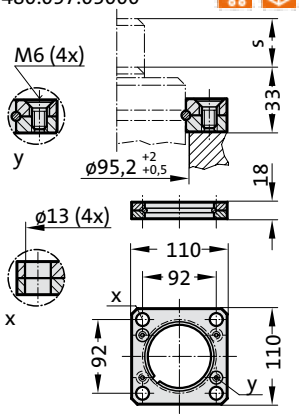


2480.064.03000 [4]

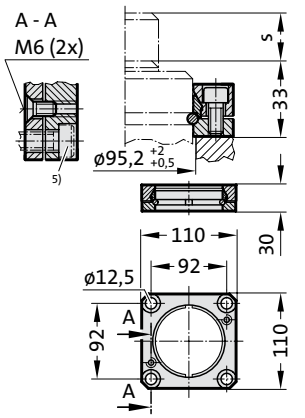


**Note:**

[2] Attention:
The spring force must be absorbed by the stop Surface!
[3] Not for use with composite connection.
[4] Square collar flange, non-rotating, fixing for composite connection.
[5] Machine screws with hexagonal socket (compact head recommended)

# GAS SPRING HEAVY DUTY

**Note:**
Initial spring force at 150 bar = 4200 daN

Order No for spare parts kit: 2488.13.04200

Gas spring without valve
Order No (example): 2488.13.04200. .P

Pressure medium: Nitrogen $N_2$
Max. filling pressure: 150 bar
Min. filling pressure: 25 bar
Working temperature: 0°C to +80°C
Temperature related force increase: ± 0.3%/°C
Max. recommended extensions per minute:
approx. 15 to 100 (at 20°C)
Max. piston speed: 1.6 m/s

## 2488.13.04200.

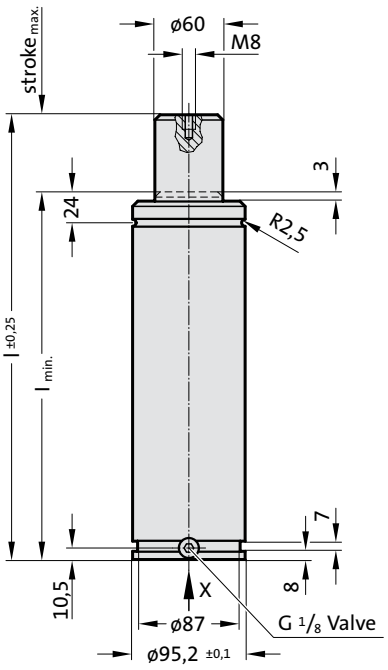


View X

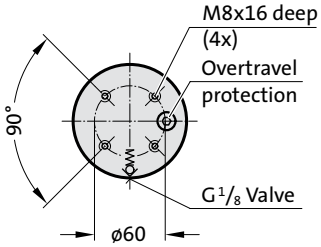

APPROVED PED 2014/68/EU | VDI | ISO

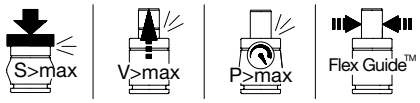


**2488.13.04200.**

**Gas spring HEAVY DUTY**

| Order No | Stroke max. (s) | l min. | l |
|---|---|---|---|
| 2488.13.04200.025 | 25 | 145 | 170 |
| 2488.13.04200.038 | 38 | 158 | 196 |
| 2488.13.04200.050 | 50 | 170 | 220 |
| 2488.13.04200.063 | 63 | 183 | 246 |
| 2488.13.04200.075 | 75 | 195 | 270 |
| 2488.13.04200.080 | 80 | 200 | 280 |
| 2488.13.04200.100 | 100 | 220 | 320 |
| 2488.13.04200.125 | 125 | 245 | 370 |
| 2488.13.04200.150 | 150 | 270 | 420 |
| 2488.13.04200.160 | 160 | 280 | 440 |
| 2488.13.04200.175 | 175 | 295 | 470 |
| 2488.13.04200.200 | 200 | 320 | 520 |
| 2488.13.04200.250 | 250 | 370 | 620 |
| 2488.13.04200.300 | 300 | 420 | 720 |

Initial spring force
versus charge pressure

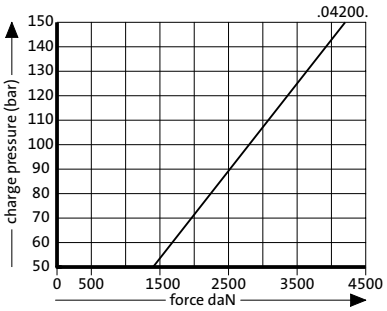


Spring force Diagram displacement versus stroke rise

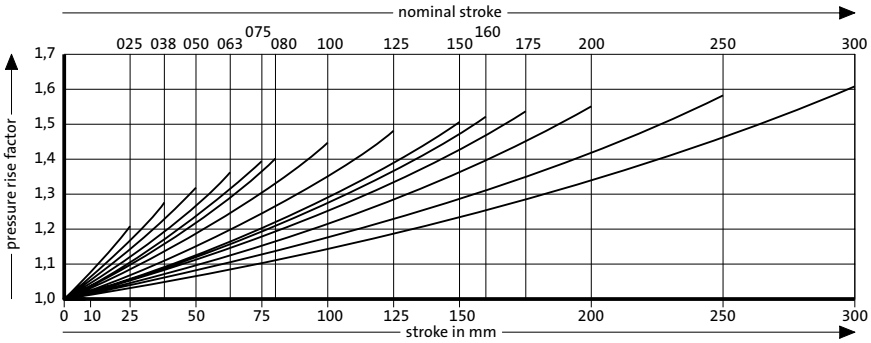


Pressure rise factor accounts for displacement but not external influences!

# GAS SPRING HEAVY DUTY
# MOUNTING VARIATIONS

2480.007.05000

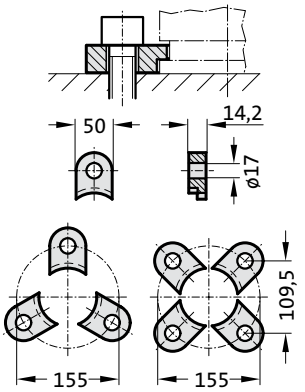


2480.008.05000 [3]

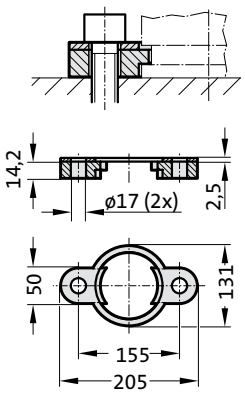


2480.010.05000.160 [3]

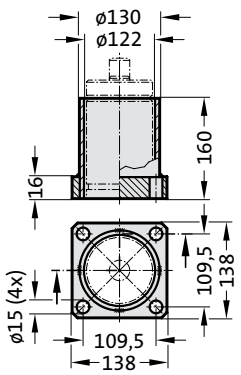


2480.011.05000

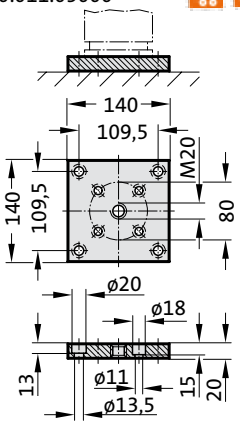


2480.011.05000.2

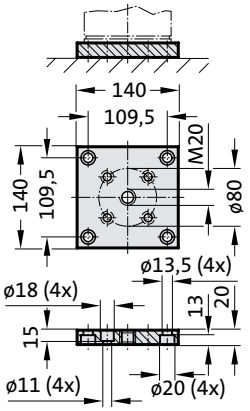


2480.022.05000

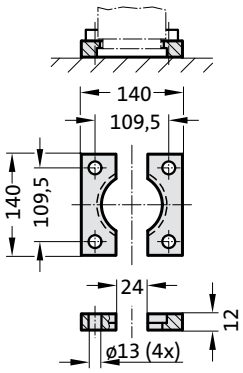


2480.044.05000 [2]

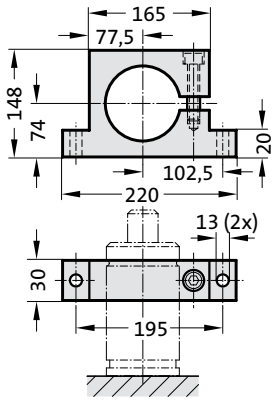


2480.044.03.05000 [2]

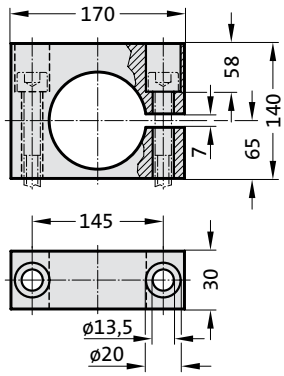


2480.045.05000 [2]

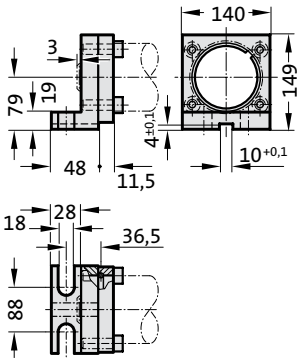


2480.047.05000 [2]

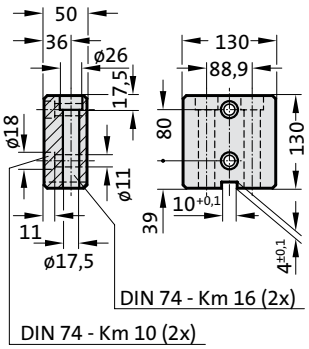


2480.055.05000

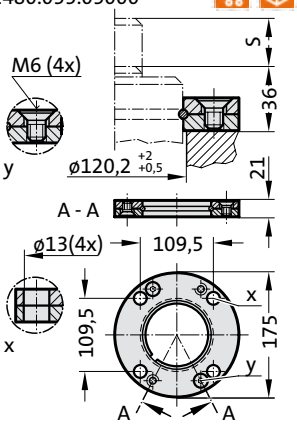


2480.057.05000

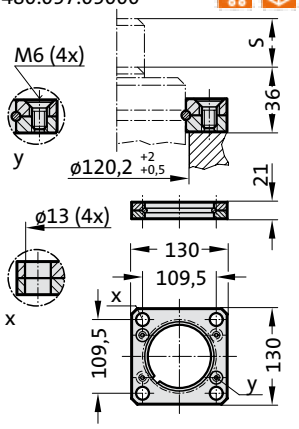


2480.064.05000 [4]

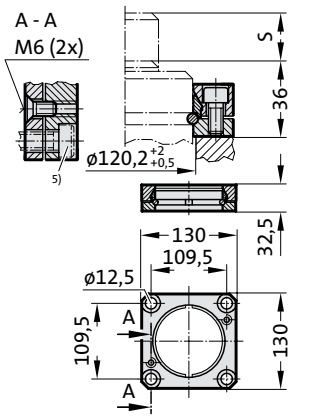


**Note:**

[2] Attention:
The spring force must be absorbed by the stop Surface!
[3] Not for use with composite connection.
[4] Square collar flange, non-rotating, fixing for composite connection.
[5] Machine screws with hexagonal socket (compact head recommended)

# GAS SPRING HEAVY DUTY

**Note:**
Initial spring force at 150 bar = 6600 daN

Order No for spare parts kit: 2488.13.06600

Gas spring without valve
Order No (example): 2488.13.06600. .P

Pressure medium: Nitrogen $N_2$
Max. filling pressure: 150 bar
Min. filling pressure: 25 bar
Working temperature: 0°C to +80°C
Temperature related force increase: ± 0.3%/°C
Max. recommended extensions per minute:
approx. 15 to 100 (at 20°C)
Max. piston speed: 1.6 m/s

## 2488.13.06600.

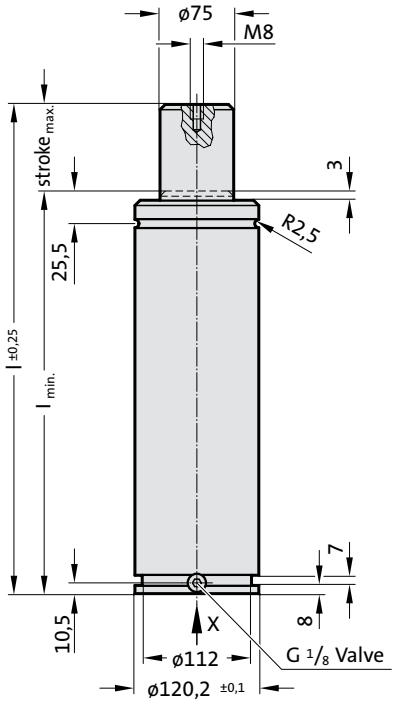


View X

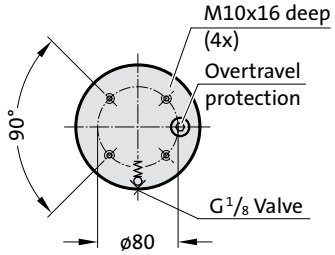

APPROVED PED 2014/68/EU | VDI | ISO

S>max | V>max | P>max | Flex Guide™

**2488.13.06600.**

**Gas spring HEAVY DUTY**

| Order No | Stroke$_{max.}$ (s) | $l_{min.}$ | l |
|---|---|---|---|
| 2488.13.06600.025 | 25 | 165 | 190 |
| 2488.13.06600.038 | 38 | 178 | 216 |
| 2488.13.06600.050 | 50 | 190 | 240 |
| 2488.13.06600.063 | 63 | 203 | 266 |
| 2488.13.06600.075 | 75 | 215 | 290 |
| 2488.13.06600.080 | 80 | 220 | 300 |
| 2488.13.06600.100 | 100 | 240 | 340 |
| 2488.13.06600.125 | 125 | 265 | 390 |
| 2488.13.06600.150 | 150 | 290 | 440 |
| 2488.13.06600.160 | 160 | 300 | 460 |
| 2488.13.06600.175 | 175 | 315 | 490 |
| 2488.13.06600.200 | 200 | 340 | 540 |
| 2488.13.06600.250 | 250 | 390 | 640 |
| 2488.13.06600.300 | 300 | 440 | 740 |

Initial spring force
versus charge pressure

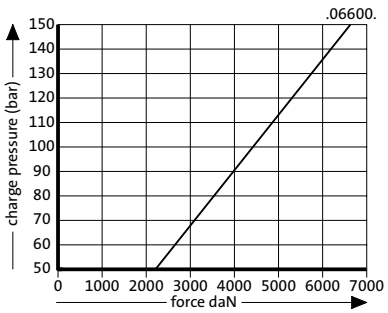


Spring force Diagram displacement versus stroke rise

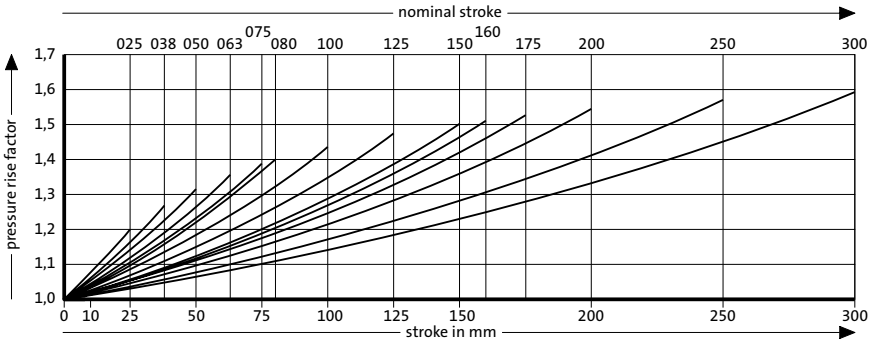


Pressure rise factor accounts for displacement but not external influences!

# GAS SPRING HEAVY DUTY
# MOUNTING VARIATIONS

2480.007.07500

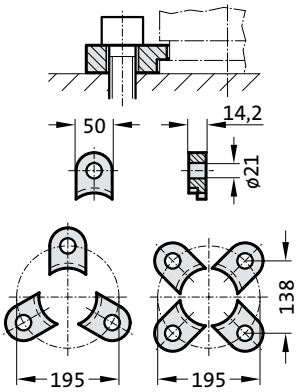


2480.008.07500 [3]

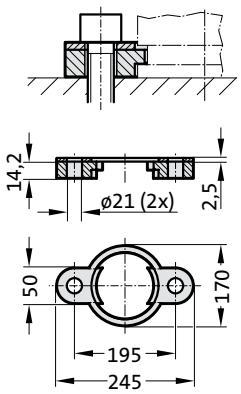


2480.011.07500

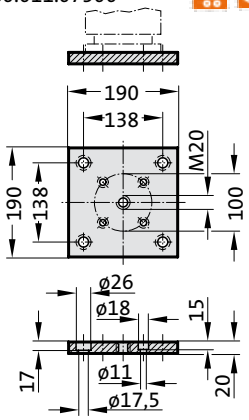


2480.011.07500.2

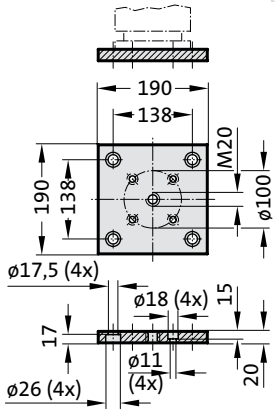


2480.011.03.07500

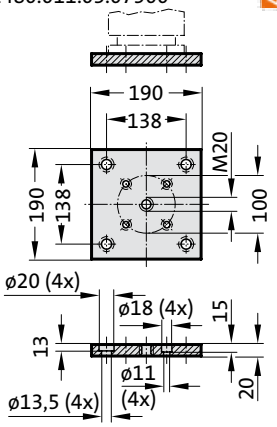


2480.011.03.07500.2

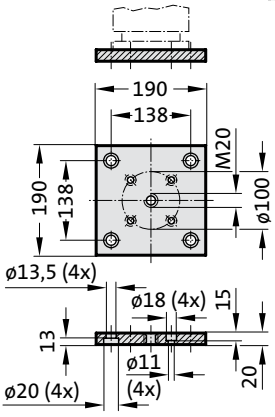


2480.022.07500

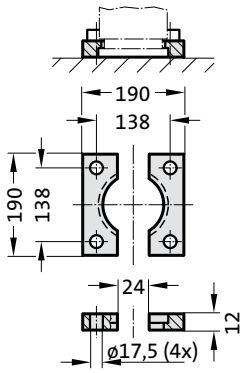


2480.044.07500 [2]

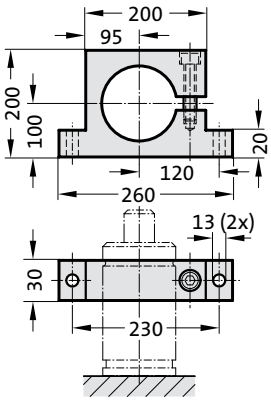


2480.044.03.07500 [2]

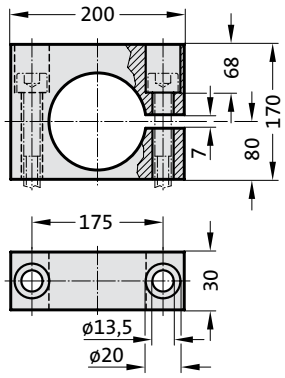


2480.055.07500

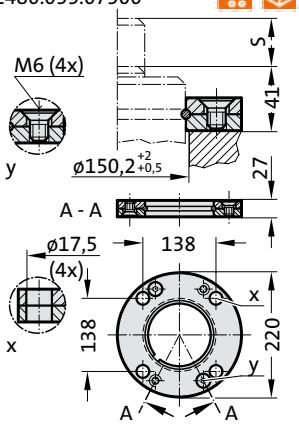


2480.057.07500

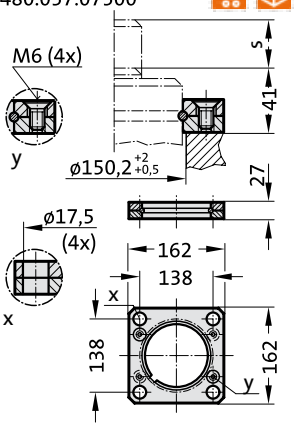


2480.064.07500 [4]

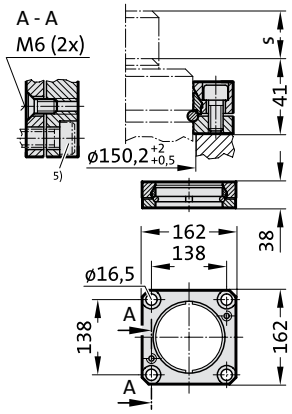


**Note:**

[2] Attention:
The spring force must be absorbed by the stop Surface!

[3] Not for use with composite connection.

[4] Square collar flange, non-rotating, fixing for composite connection.

[5] Machine screws with hexagonal socket (compact head recommended)

# GAS SPRING HEAVY DUTY

**Note:**
Initial spring force at 150 bar = 9500 daN

Order No for spare parts kit: 2488.13.09500

Gas spring without valve
Order No (example): 2488.13.09500. .P

Pressure medium: Nitrogen $N_2$
Max. filling pressure: 150 bar
Min. filling pressure: 25 bar
Working temperature: 0°C to +80°C
Temperature related force increase: ± 0.3%/°C
Max. recommended extensions per minute:
approx. 15 to 100 (at 20°C)
Max. piston speed: 1.6 m/s

## 2488.13.09500.

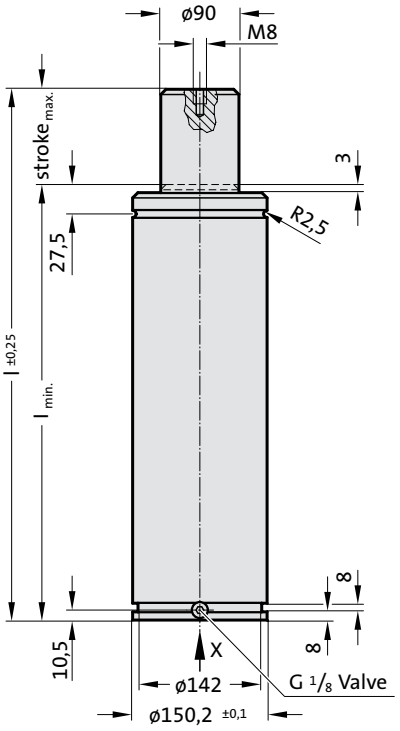

APPROVED PED 2014/68/EU | VDI | ISO

S>max | V>max | P>max | Flex Guide™

**2488.13.09500.**

**Gas spring HEAVY DUTY**

| Order No | Stroke$_{max.}$ (s) | $l_{min.}$ | l |
|---|---|---|---|
| 2488.13.09500.025 | 25 | 180 | 205 |
| 2488.13.09500.038 | 38 | 193 | 231 |
| 2488.13.09500.050 | 50 | 205 | 255 |
| 2488.13.09500.063 | 63 | 218 | 281 |
| 2488.13.09500.075 | 75 | 230 | 305 |
| 2488.13.09500.080 | 80 | 235 | 315 |
| 2488.13.09500.100 | 100 | 255 | 355 |
| 2488.13.09500.125 | 125 | 280 | 405 |
| 2488.13.09500.150 | 150 | 305 | 455 |
| 2488.13.09500.160 | 160 | 315 | 475 |
| 2488.13.09500.175 | 175 | 330 | 505 |
| 2488.13.09500.200 | 200 | 355 | 555 |
| 2488.13.09500.250 | 250 | 405 | 655 |
| 2488.13.09500.300 | 300 | 455 | 755 |

Initial spring force
versus charge pressure

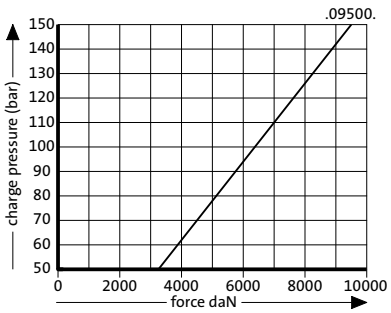


Spring force Diagram displacement versus stroke rise

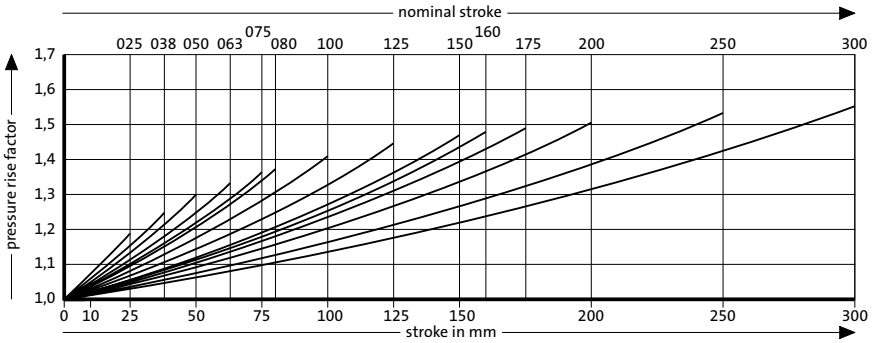


Pressure rise factor accounts for displacement but not external influences!

# GAS SPRING HEAVY DUTY
# MOUNTING VARIATIONS

2480.007.10000

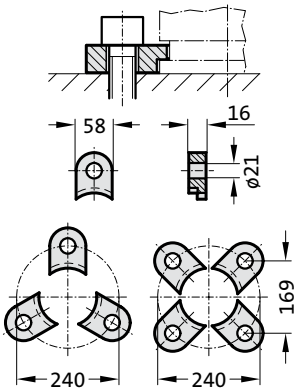


2480.011.10000

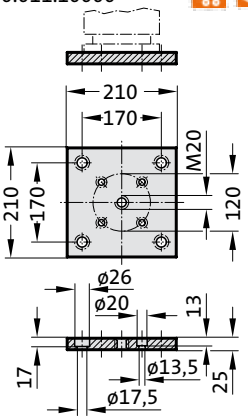


2480.011.10000.2

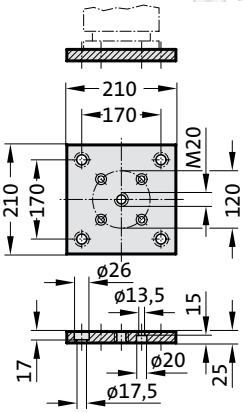


2480.022.10000

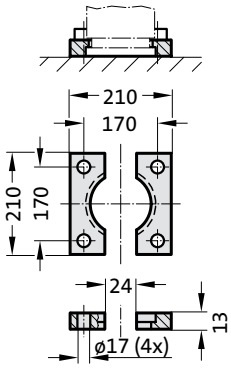


2480.057.10000

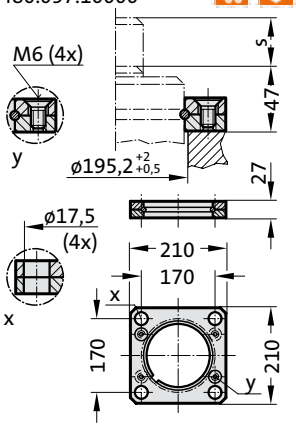

# GAS SPRING HEAVY DUTY

**Note:**
Initial spring force at 150 bar = 20000 daN

Order No for spare parts kit: 2488.13.20000

Gas spring without valve
Order No (example): 2488.13.20000. .P

Pressure medium: Nitrogen $N_2$
Max. filling pressure: 150 bar
Min. filling pressure: 25 bar
Working temperature: 0°C to +80°C
Temperature related force increase: ± 0.3%/°C
Max. recommended extensions per minute:
approx. 15 to 100 (at 20°C)
Max. piston speed: 1.6 m/s

## 2488.13.20000.

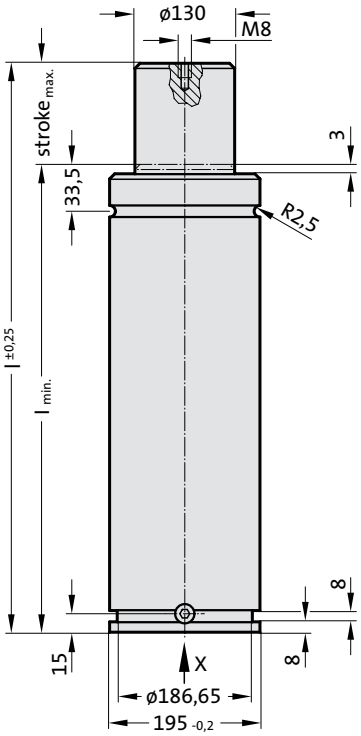


View X

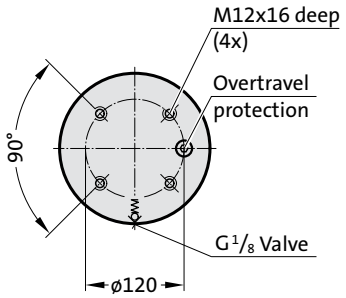

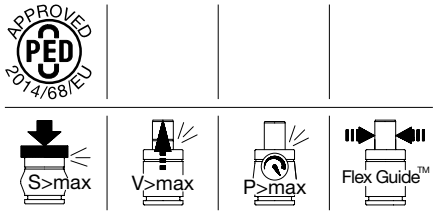


**2488.13.20000.**

**Gas spring HEAVY DUTY**

| Order No | Stroke$_{max.}$ (s) | $l_{min.}$ | l |
|---|---|---|---|
| 2488.13.20000.025 | 25 | 185 | 210 |
| 2488.13.20000.038 | 38 | 198 | 236 |
| 2488.13.20000.050 | 50 | 210 | 260 |
| 2488.13.20000.063 | 63 | 223 | 286 |
| 2488.13.20000.075 | 75 | 235 | 310 |
| 2488.13.20000.080 | 80 | 240 | 320 |
| 2488.13.20000.100 | 100 | 260 | 360 |
| 2488.13.20000.125 | 125 | 285 | 410 |
| 2488.13.20000.150 | 150 | 310 | 460 |
| 2488.13.20000.160 | 160 | 320 | 480 |
| 2488.13.20000.175 | 175 | 335 | 510 |
| 2488.13.20000.200 | 200 | 360 | 560 |
| 2488.13.20000.250 | 250 | 410 | 660 |
| 2488.13.20000.300 | 300 | 460 | 760 |

Initial spring force
versus charge pressure

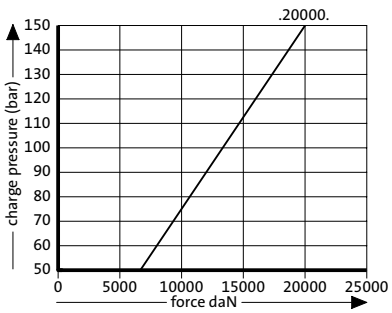


Spring force Diagram displacement versus stroke rise

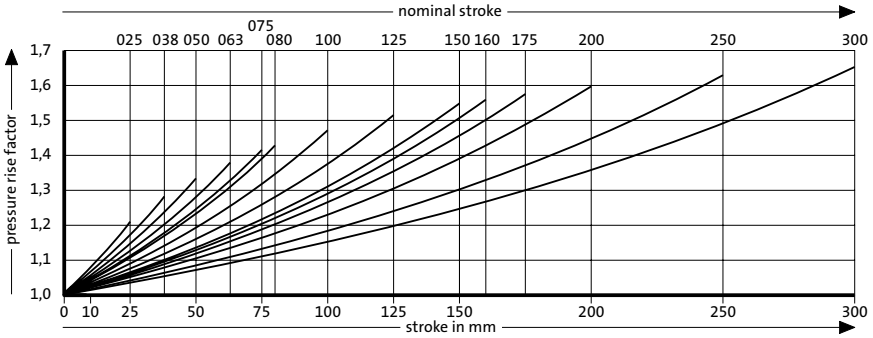


Pressure rise factor accounts for displacement but not external influences!

# GAS SPRING WITH THROUGH BORE PASSAGE

# GAS SPRING WITH THROUGH BORE PASSAGE
# MOUNTING VARIATIONS

2480.055.00250

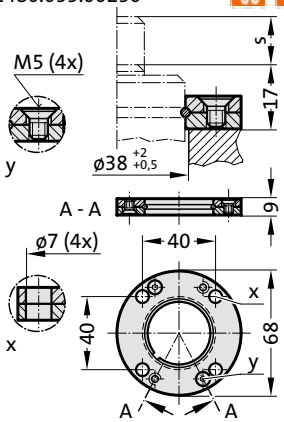


2480.057.00250

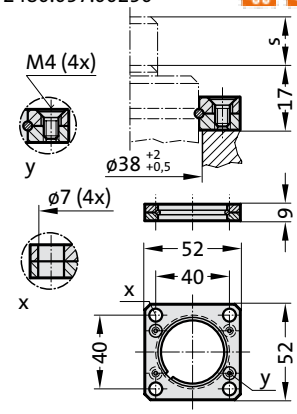


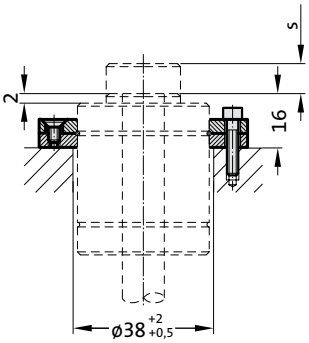


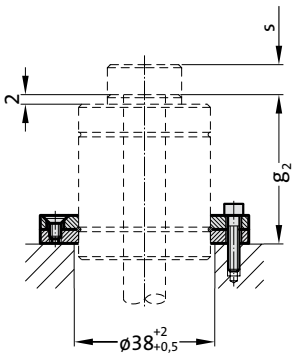


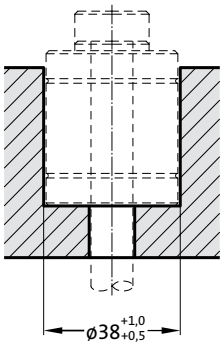

# GAS SPRING WITH THROUGH BORE PASSAGE

**Note:**
Initial spring force at 150 bar = 270 daN

Order No for spare parts kit: 2496.12.00270

Pressure medium: Nitrogen $N_2$
Max. filling pressure: 150 bar
Min. filling pressure: 50 bar
Working temperature: 0°C to +80°C
Temperature related force increase: ± 0.3%/°C
Max. recommended extensions per minute:
approx. 15 to 40 (at 20°C)
Max. piston speed: 0.5 m/s

2496.12.00270.

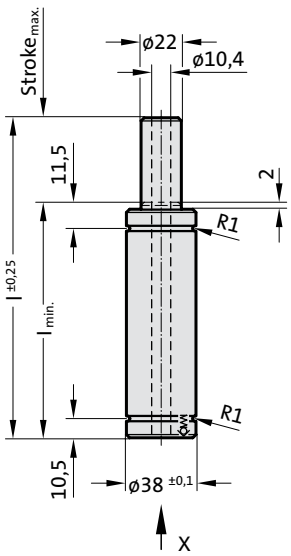


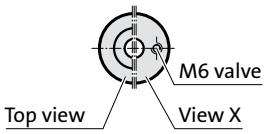

APPROVED PED 2014/68/EU

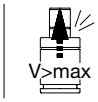


**2496.12.00270.**

**Gas spring with through bore passage**

| Order No | Stroke$_{max.}$ (s) | $l_{min.}$ | l | $g_2$* |
|---|---|---|---|---|
| 2496.12.00270.016 | 16 | 92 | 108 | 86 |
| 2496.12.00270.025 | 25 | 101 | 126 | 95 |
| 2496.12.00270.050 | 50 | 126 | 176 | 120 |
| 2496.12.00270.080 | 80 | 156 | 236 | 150 |

see mounting example

Initial spring force
versus charge pressure

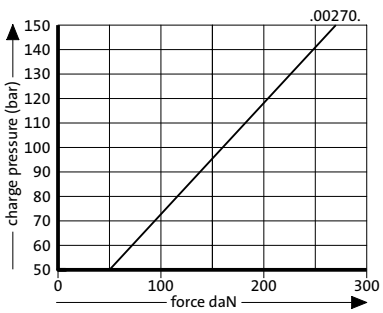


Spring force Diagram displacement versus stroke rise

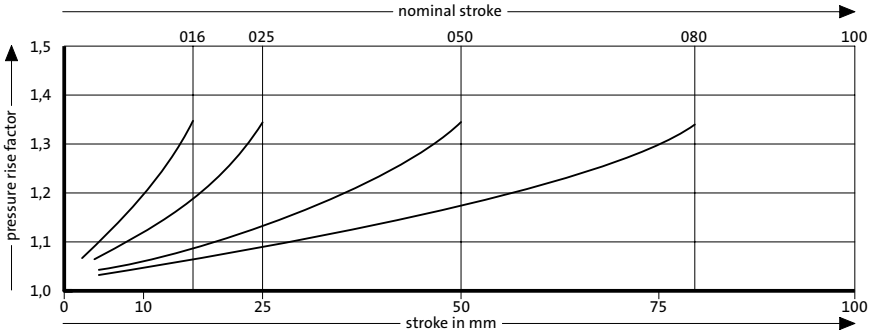


Pressure rise factor accounts for displacement but not external influences!

# GAS SPRING WITH THROUGH BORE PASSAGE
# MOUNTING VARIATIONS

2480.055.00750

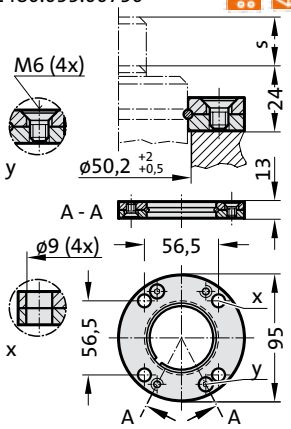


2480.057.00750

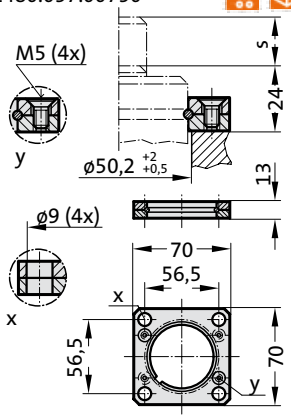


2480.064.00750 [4]

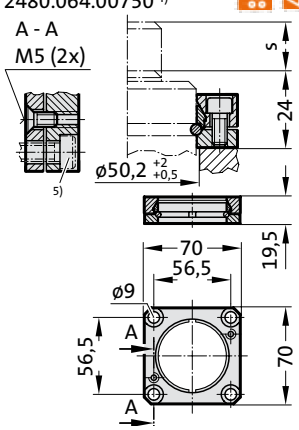


**Note:**

[4] Square collar flange, non-rotating, fixing for composite connection.

[5] Machine screws with hexagonal socket (compact head recommended)

**Mounting examples:**

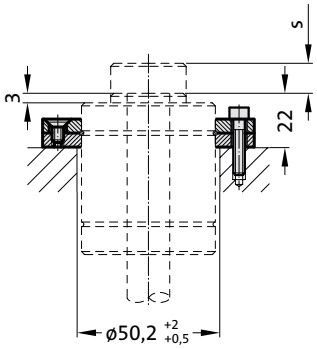


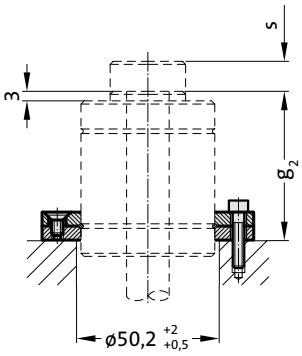


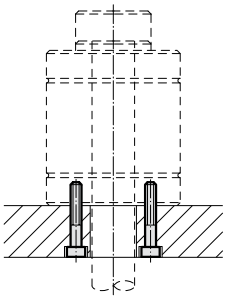

**see Note!**

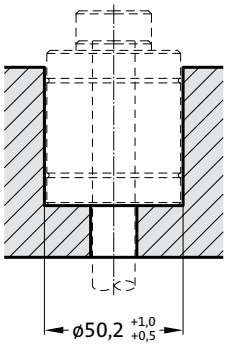

# GAS SPRING WITH THROUGH BORE PASSAGE

**Note:**
Initial spring force at 150 bar = 490 daN

When mounting to floor, contact over the entire floor of the cylinder tube must be ensured!

Order No for spare parts kit: 2496.12.00490

Pressure medium: Nitrogen $N_2$
Max. filling pressure: 150 bar
Min. filling pressure: 50 bar
Working temperature: 0°C to +80°C
Temperature related force increase: ± 0.3%/°C
Max. recommended extensions per minute: approx. 15 to 40 (at 20°C)
Max. piston speed: 0.5 m/s

2496.12.00490.

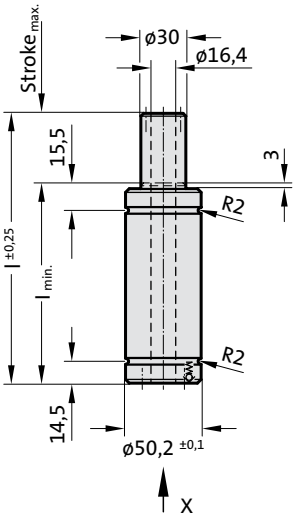


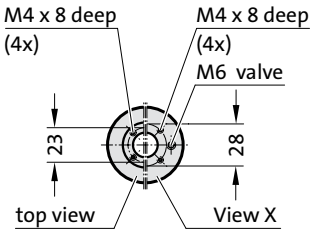

APPROVED PED 2014/68/EU

V>max

**2496.12.00490.**

**Gas spring with through bore passage**

| Order No | Stroke$_{max.}$ (s) | $l_{min.}$ | l | $g_2$* |
|---|---|---|---|---|
| 2496.12.00490.016 | 16 | 96 | 112 | 88 |
| 2496.12.00490.025 | 25 | 105 | 130 | 97 |
| 2496.12.00490.050 | 50 | 130 | 180 | 122 |
| 2496.12.00490.080 | 80 | 160 | 240 | 152 |

see mounting example

Initial spring force
versus charge pressure

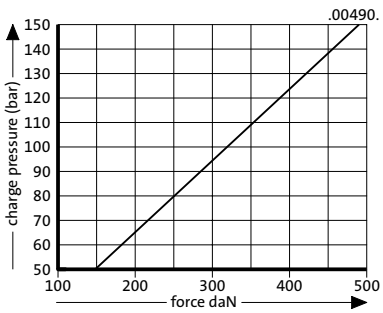


Spring force Diagram displacement versus stroke rise

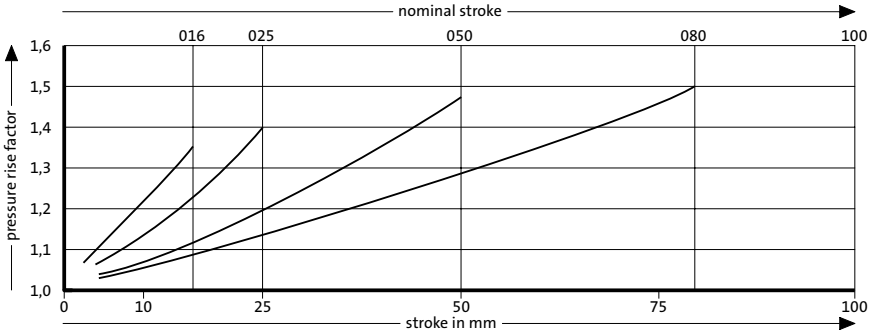


Pressure rise factor accounts for displacement but not external influences!

# GAS SPRING WITH THROUGH BORE PASSAGE
# MOUNTING VARIATIONS

2480.055.01500

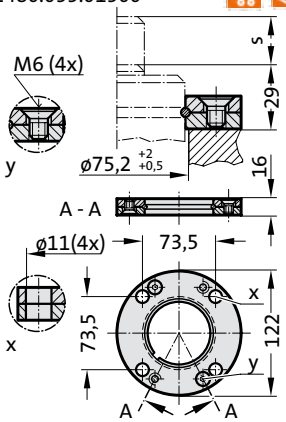


2480.057.01500

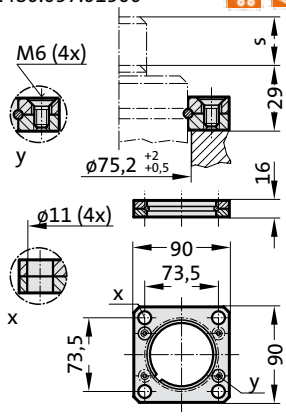


2480.064.01500 [4]

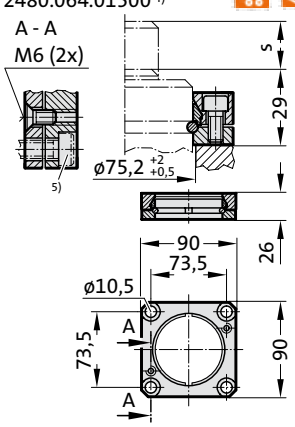


**Note:**

[4] Square collar flange, non-rotating, fixing for composite connection.

[5] Machine screws with hexagonal socket (compact head recommended)

**Mounting examples:**

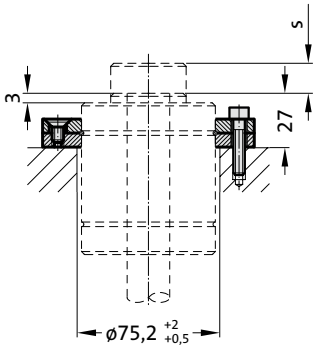


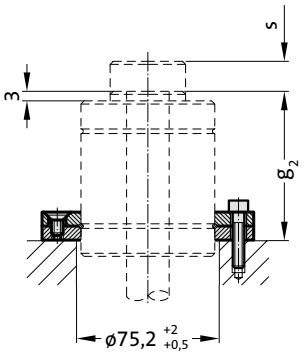


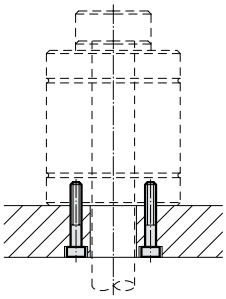

**see Note!**

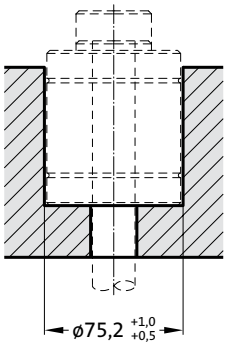

# GAS SPRING WITH THROUGH BORE PASSAGE

**Note:**
Initial spring force at 150 bar = 1060 daN

When mounting to floor, contact over the entire floor of the cylinder tube must be ensured!

Order No for spare parts kit: 2496.12.01060

Pressure medium: Nitrogen $N_2$
Max. filling pressure: 150 bar
Min. filling pressure: 50 bar
Working temperature: 0°C to +80°C
Temperature related force increase: ± 0.3%/°C
Max. recommended extensions per minute:
approx. 15 to 40 (at 20°C)
Max. piston speed: 0.5 m/s

2496.12.01060.

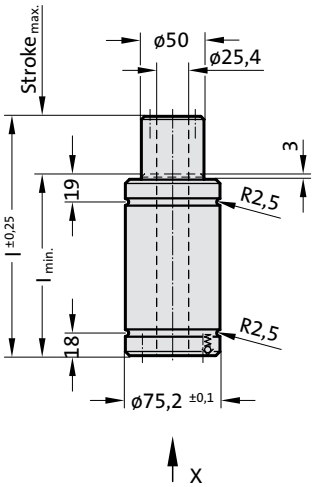


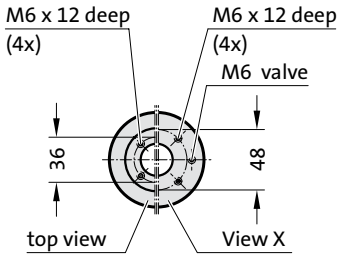

APPROVED PED 2014/68/EU

V>max

**2496.12.01060.**

**Gas spring with through bore passage**

| Order No | Stroke$_{max.}$ (s) | $l_{min.}$ | l | $g_2$* |
|---|---|---|---|---|
| 2496.12.01060.016 | 16 | 106 | 122 | 96 |
| 2496.12.01060.025 | 25 | 115 | 140 | 105 |
| 2496.12.01060.050 | 50 | 140 | 190 | 130 |
| 2496.12.01060.080 | 80 | 170 | 250 | 160 |
| 2496.12.01060.100 | 100 | 190 | 290 | 180 |

see mounting example

Initial spring force
versus charge pressure

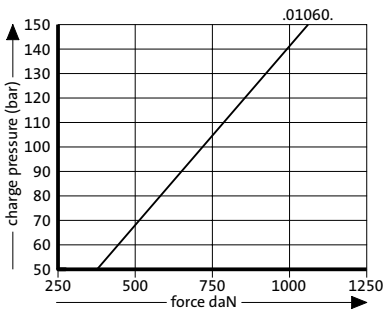


Spring force Diagram displacement versus stroke rise

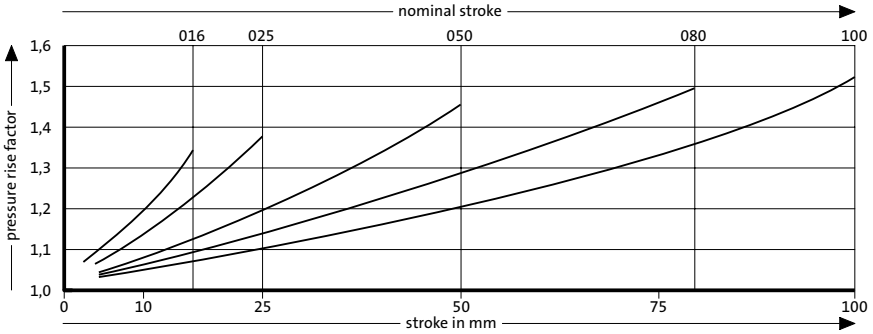


Pressure rise factor accounts for displacement but not external influences!

# GAS SPRINGS
# POWERLINE

# GAS SPRING POWERLINE
# MOUNTING VARIATIONS

2480.051.03.00030

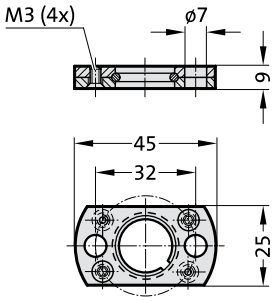


2480.052.00030

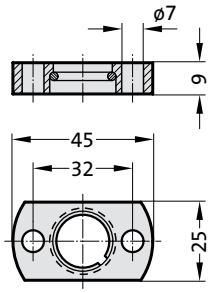


**Mounting examples:**

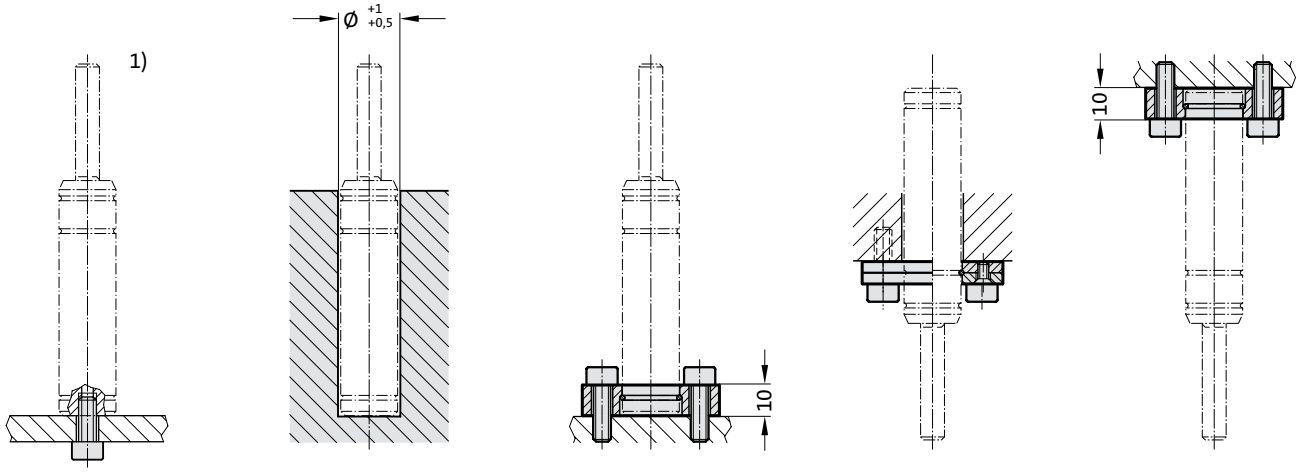

# GAS SPRING POWERLINE

**Note:**
Initial spring force at 180 bar = 170 daN

Worn gas springs cannot be repaired, they have to be replaced completely.

1) Fixing at bottom thread only recommanded for stroke length up to 25 mm.

Pressure medium: Nitrogen $N_2$
Max. filling pressure: 180 bar
Min. filling pressure: 25 bar
Working temperature: 0°C to +80°C
Temperature related force increase: ± 0.3%/°C
Max. recommended extensions per minute: approx. 40 to 100 (at 20°C)
Max. piston speed: 1.6 m/s

**2487.12.00170.**

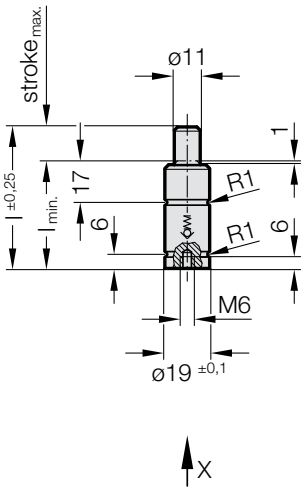


View X

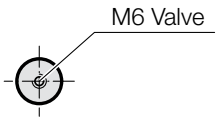

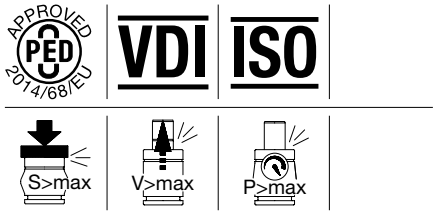


**2487.12.00170.**

**Gas spring POWERLINE**

| Order No | Stroke$_{max.}$ (s) | $l_{min.}$ | l |
|---|---|---|---|
| 2487.12.00170.007 | 7 | 37 | 44 |
| 2487.12.00170.010 | 10 | 40 | 50 |
| 2487.12.00170.015 | 15 | 45 | 60 |
| 2487.12.00170.019 | 19 | 49 | 68 |
| 2487.12.00170.025 | 25 | 55 | 80 |
| 2487.12.00170.038 | 38 | 68 | 106 |
| 2487.12.00170.050 | 50 | 80 | 130 |
| 2487.12.00170.063 | 63 | 93 | 156 |
| 2487.12.00170.075 | 75 | 110 | 185 |
| 2487.12.00170.080 | 80 | 115 | 195 |
| 2487.12.00170.100 | 100 | 135 | 235 |
| 2487.12.00170.125 | 125 | 160 | 285 |

Initial spring force
versus charge pressure

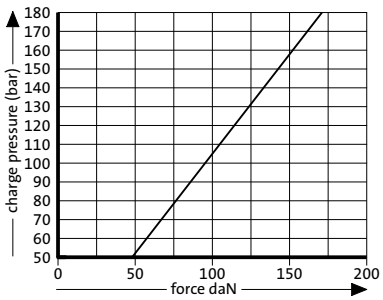


Spring force Diagram displacement versus stroke rise

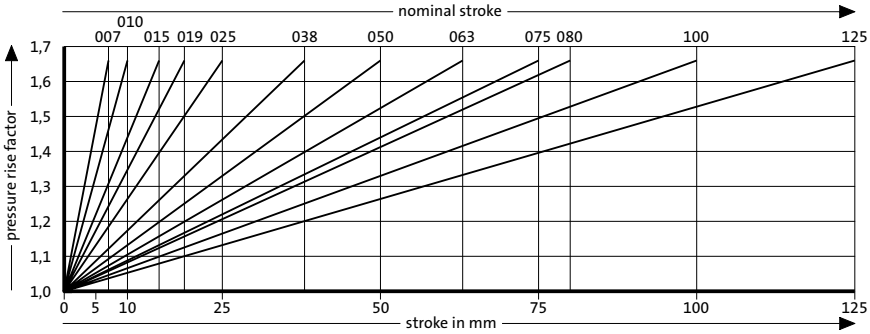


Pressure rise factor accounts for displacement but not external influences!

# GAS SPRING POWERLINE
# MOUNTING VARIATIONS

## 2480.051.00150

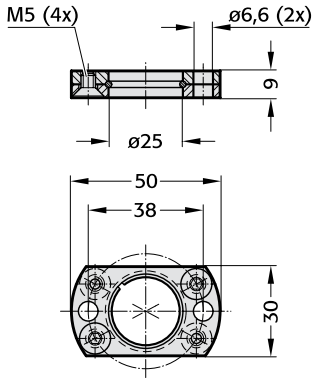


## 2480.053.00150

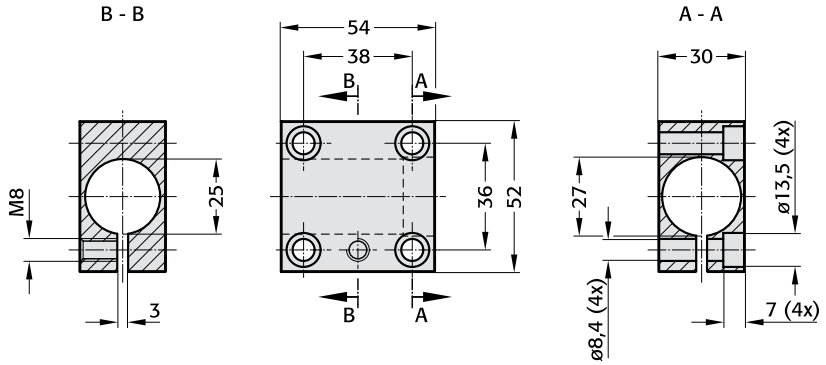


## 2480.054.00150

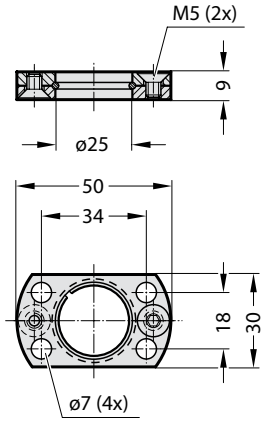


**Mounting examples:**

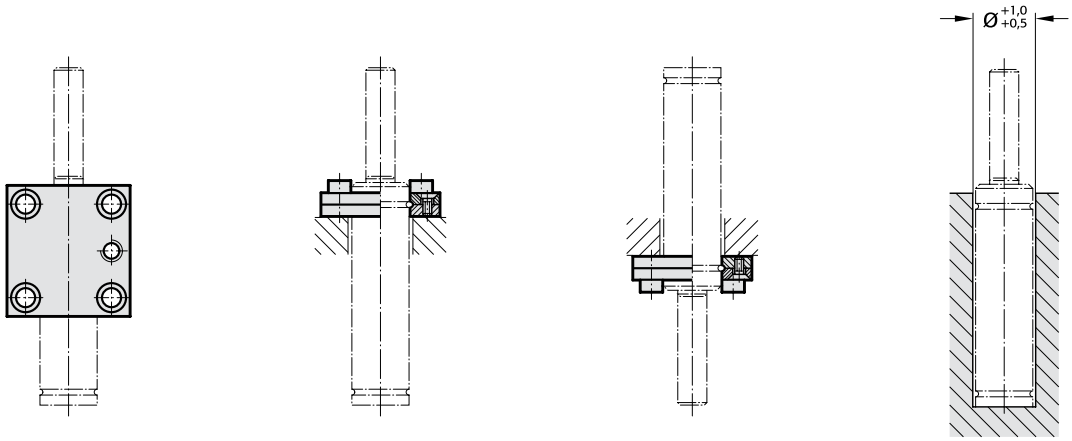

# GAS SPRING POWERLINE

**Note:**
Initial spring force at 180 bar = 320 daN

Worn gas springs cannot be repaired, they have to be replaced completely.

Pressure medium: Nitrogen $N_2$
Max. filling pressure: 180 bar
Min. filling pressure: 25 bar
Working temperature: 0°C to +80°C
Temperature related force increase: ± 0.3%/°C
Max. recommended extensions per minute: approx. 40 to 100 (at 20°C)
Max. piston speed: 1.6 m/s

**2487.12.00320.**

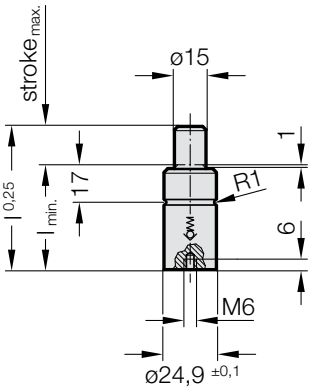


View X

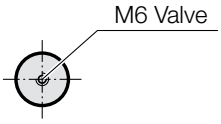

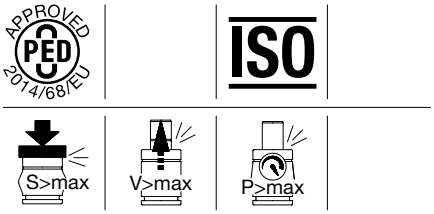


**2487.12.00320.**

**Gas spring POWERLINE**

| Order No | Stroke$_{max.}$ (s) | $l_{min.}$ | l |
|---|---|---|---|
| 2487.12.00320.007 | 7 | 37 | 44 |
| 2487.12.00320.010 | 10 | 40 | 50 |
| 2487.12.00320.015 | 15 | 45 | 60 |
| 2487.12.00320.019 | 19 | 49 | 68 |
| 2487.12.00320.025 | 25 | 55 | 80 |
| 2487.12.00320.038 | 38 | 68 | 106 |
| 2487.12.00320.050 | 50 | 80 | 130 |
| 2487.12.00320.063 | 63 | 93 | 156 |
| 2487.12.00320.075 | 75 | 110 | 185 |
| 2487.12.00320.080 | 80 | 115 | 195 |
| 2487.12.00320.100 | 100 | 135 | 235 |
| 2487.12.00320.125 | 125 | 160 | 285 |

Initial spring force
versus charge pressure

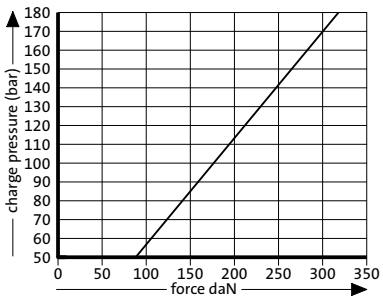


Spring force Diagram displacement versus stroke rise

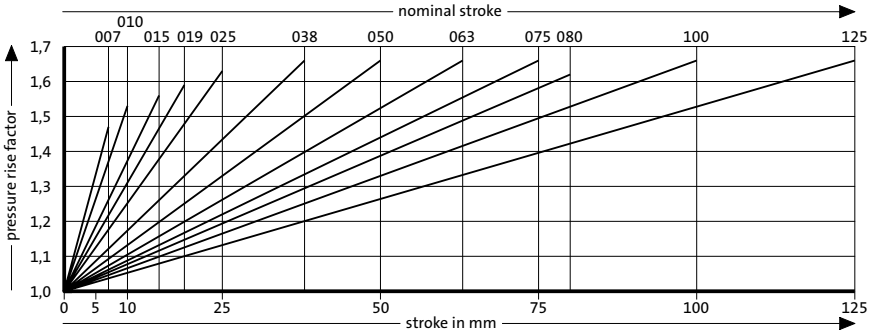


Pressure rise factor accounts for displacement but not external influences!

# GAS SPRING POWERLINE
# MOUNTING VARIATIONS

2480.022.00150

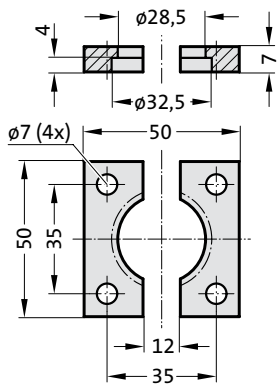


2480.044.00150[2)]

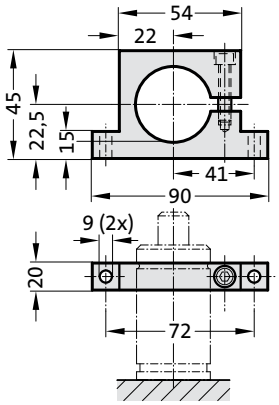


2480.044.03.00150[2)]

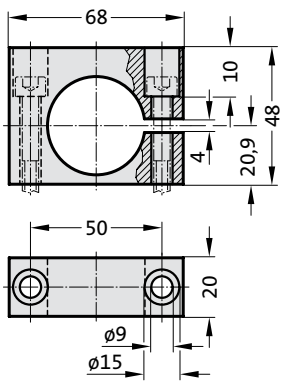


2480.055.00150

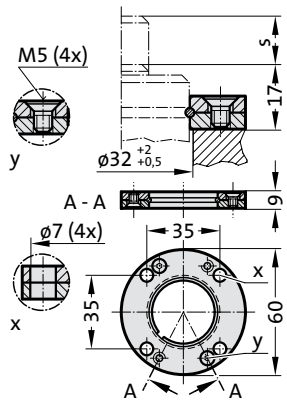


2480.057.00150

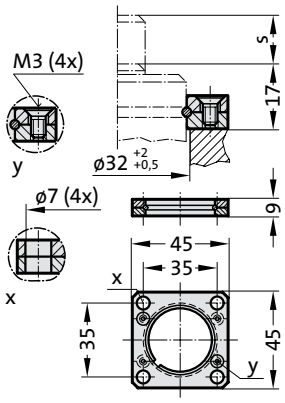


**Note:**

[2)] Attention:
The spring force must be absorbed by the stop Surface!

**Mounting examples:**

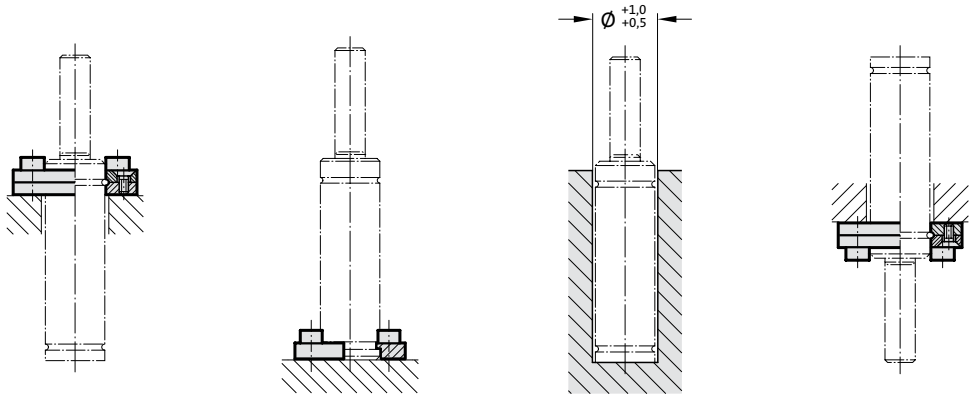

# GAS SPRING POWERLINE

**Note:**
Initial spring force at 180 bar = 350 daN

Order No for spare parts kit: 2487.12.00350

Gas spring without valve
Order No (example): 2487.12.00350. .P

Pressure medium: Nitrogen $N_2$
Max. filling pressure: 180 bar
Min. filling pressure: 25 bar
Working temperature: 0°C to +80°C
Temperature related force increase: ± 0.3%/°C
Max. recommended extensions per minute:
approx. 20 to 100 (at 20°C)
Max. piston speed: 1.6 m/s

2487.12.00350.

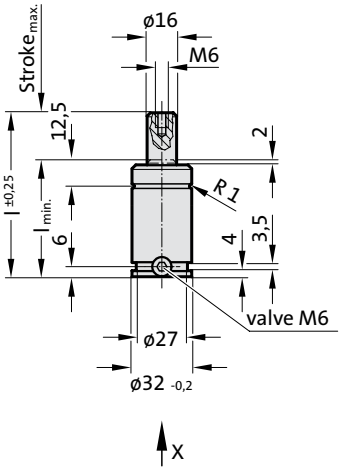

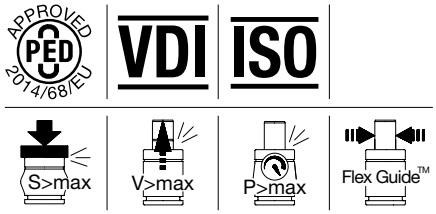


View X

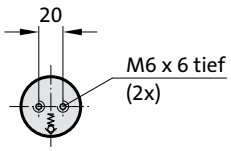


**2487.12.00350.**

**Gas spring POWERLINE**

| Order No | Stroke max. (s) | l min. | l |
|---|---|---|---|
| 2487.12.00350.010 | 10 | 40 | 50 |
| 2487.12.00350.013 | 13 | 43 | 56 |
| 2487.12.00350.016 | 16 | 46 | 62 |
| 2487.12.00350.019 | 19 | 49 | 68 |
| 2487.12.00350.025 | 25 | 55 | 80 |
| 2487.12.00350.032 | 32 | 62 | 94 |
| 2487.12.00350.038 | 38 | 68 | 106 |
| 2487.12.00350.050 | 50 | 80 | 130 |
| 2487.12.00350.063 | 63 | 93 | 156 |
| 2487.12.00350.075 | 75 | 105 | 180 |
| 2487.12.00350.080 | 80 | 110 | 190 |
| 2487.12.00350.100 | 100 | 130 | 230 |
| 2487.12.00350.125 | 125 | 155 | 280 |

Initial spring force
versus charge pressure

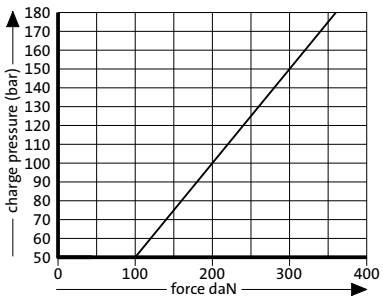


Spring force Diagram displacement versus stroke rise

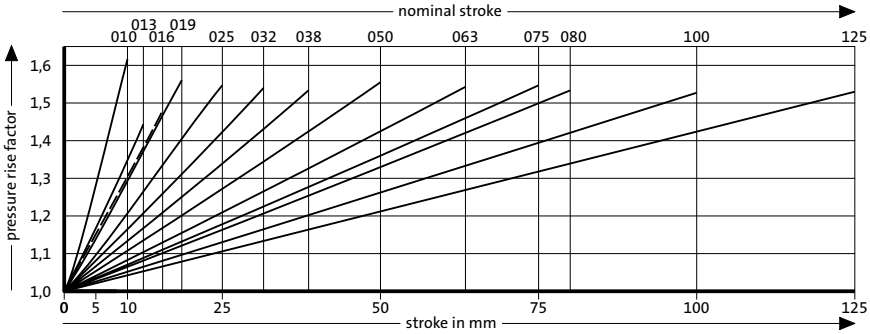


Pressure rise factor accounts for displacement but not external influences!

# GAS SPRING POWERLINE
# MOUNTING VARIATIONS

2480.007.00250

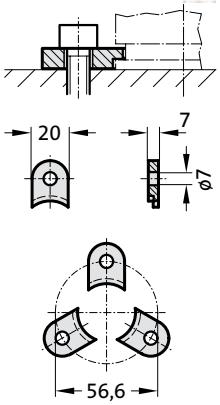


2480.008.00250 [3]

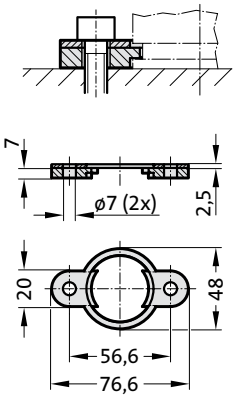


2480.010.00250.055 [3]
2480.010.00250.095* [3]

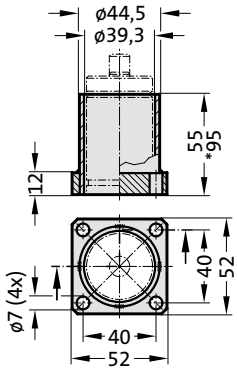


2480.022.00250

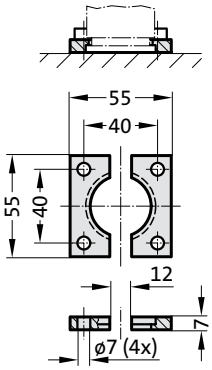


2480.044.00250 [2]

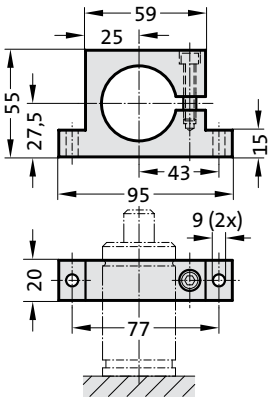


2480.044.03.00250 [2]

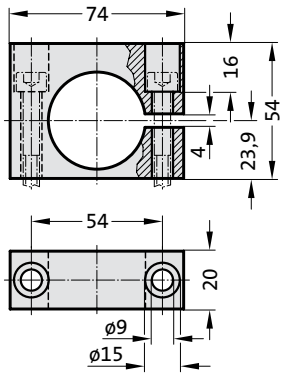


2480.055.00250

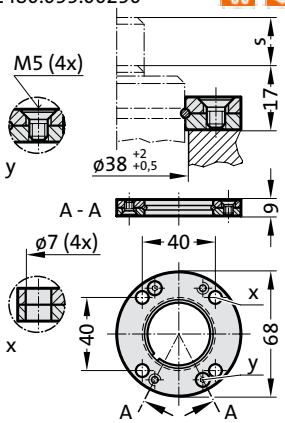


2480.057.00250

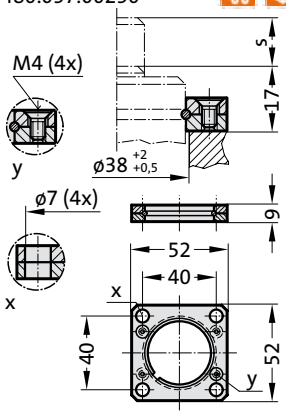


**Note:**

[2] Attention:
The spring force must be absorbed by the stop Surface!
[3] Not for use with composite connection.

# GAS SPRING POWERLINE

**Note:**
Initial spring force at 150 bar = 470 daN

Order No for spare parts kit: 2487.12.00500

Gas spring without valve
Order No (example): 2487.12.00500. .P

Pressure medium: Nitrogen $N_2$
Max. filling pressure: 150 bar
Min. filling pressure: 25 bar
Working temperature: 0°C to +80°C
Temperature related force increase: ± 0.3%/°C
Max. recommended extensions per minute:
approx. 20 to 100 (at 20°C)
Max. piston speed: 1.6 m/s

**2487.12.00500.**

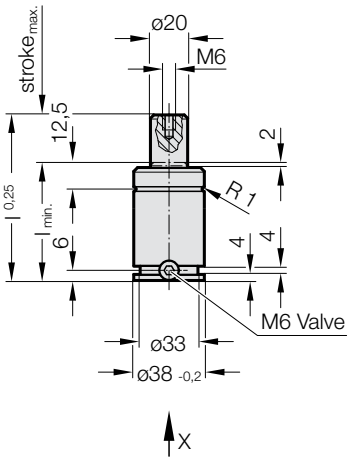


View X

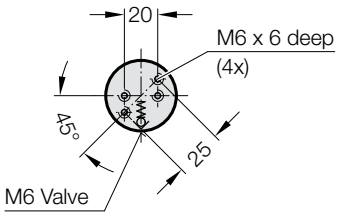

APPROVED PED 2014/68/EU | VDI | ISO

S>max | V>max | P>max | Flex Guide™

**2487.12.00500.**

**Gas spring POWERLINE**

| Order No | Stroke$_{max.}$ (s) | $l_{min.}$ | l |
|---|---|---|---|
| 2487.12.00500.010 | 10 | 40 | 50 |
| 2487.12.00500.013 | 13 | 43 | 56 |
| 2487.12.00500.016 | 16 | 46 | 62 |
| 2487.12.00500.019 | 19 | 49 | 68 |
| 2487.12.00500.025 | 25 | 55 | 80 |
| 2487.12.00500.032 | 32 | 62 | 94 |
| 2487.12.00500.038 | 38 | 68 | 106 |
| 2487.12.00500.050 | 50 | 80 | 130 |
| 2487.12.00500.063 | 63 | 93 | 156 |
| 2487.12.00500.075 | 75 | 105 | 180 |
| 2487.12.00500.080 | 80 | 110 | 190 |
| 2487.12.00500.100 | 100 | 130 | 230 |
| 2487.12.00500.125 | 125 | 155 | 280 |

Initial spring force
versus charge pressure

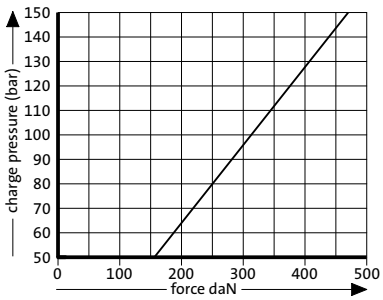


Spring force Diagram displacement versus stroke rise

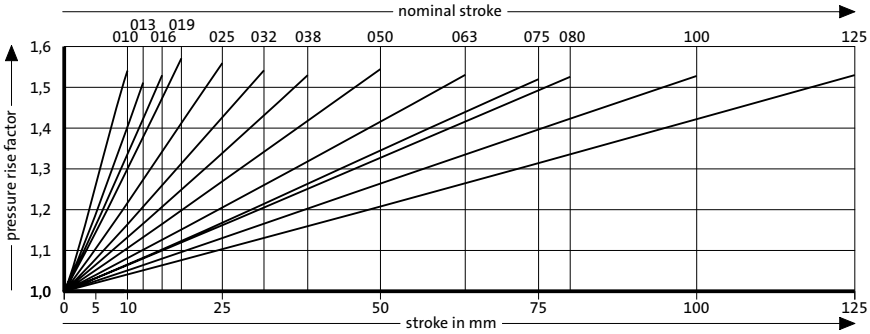


Pressure rise factor accounts for displacement but not external influences!

# GAS SPRING POWERLINE
# MOUNTING VARIATIONS

2480.007.00500

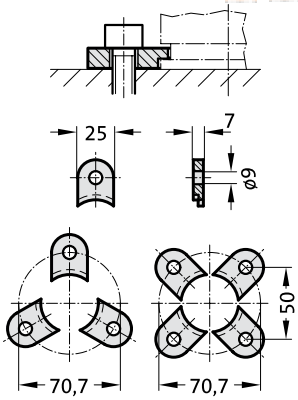


2480.008.00500 [3]

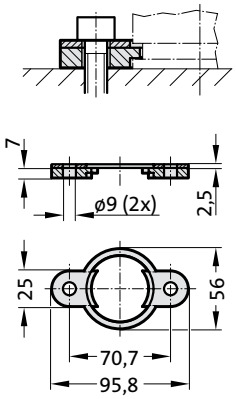


2480.010.00500.095 [3]
2480.010.00500.180* [3]

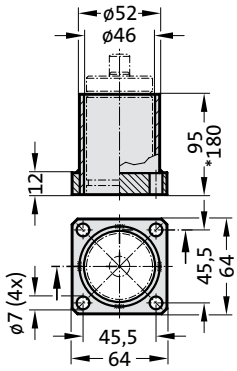


2480.022.00500

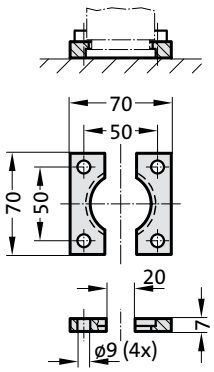


2480.044.00500 [2]

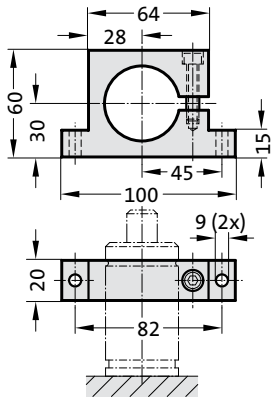


2480.044.03.00500 [2]

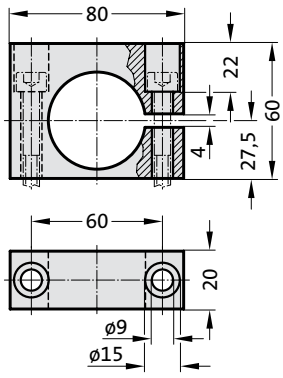


2480.055.00500

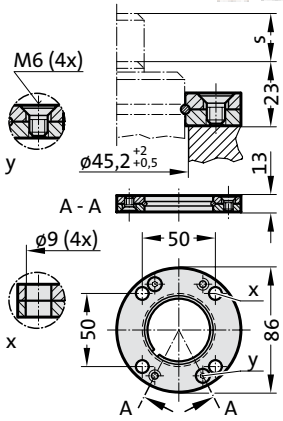


2480.057.00500

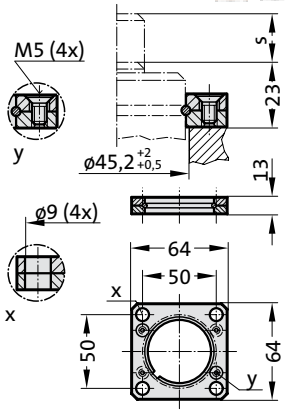


2480.064.00500 [4]

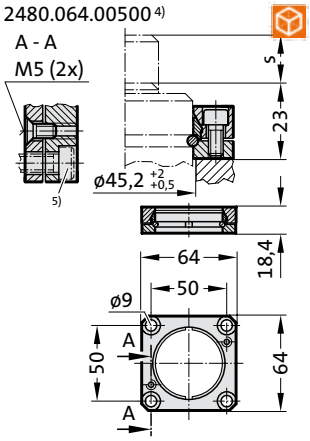


**Note:**

[2] Attention:
The spring force must be absorbed by the stop Surface!
[3] Not for use with composite connection.
[4] Square collar flange, non-rotating, fixing for composite connection.
[5] Machine screws with hexagonal socket (compact head recommended)

# GAS SPRING POWERLINE

**Note:**
Initial spring force at 150 bar = 750 daN

Order No for spare parts kit: 2487.12.00750

Gas spring without valve
Order No (example): 2487.12.00750. .1.P

Pressure medium: Nitrogen $N_2$
Max. filling pressure: 150 bar
Min. filling pressure: 25 bar
Working temperature: 0°C to +80°C
Temperature related force increase: ± 0.3%/°C
Max. recommended extensions per minute:
approx. 20 to 100 (at 20°C)
Max. piston speed: 1.6 m/s

2487.12.00750. .1

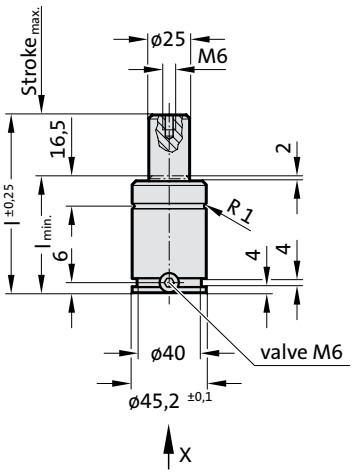


View X

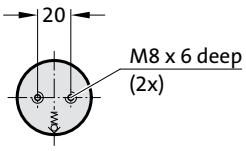

APPROVED PED 2014/68/EU | VDI | ISO

S>max | V>max | P>max | Flex Guide™

**2487.12.00750. .1**

**Gas spring POWERLINE**

| Order No | Stroke$_{max.}$ (s) | $l_{min.}$ | l |
|---|---|---|---|
| 2487.12.00750.010.1 | 10 | 42 | 52 |
| 2487.12.00750.013.1 | 13 | 45 | 58 |
| 2487.12.00750.016.1 | 16 | 48 | 64 |
| 2487.12.00750.019.1 | 19 | 51 | 70 |
| 2487.12.00750.025.1 | 25 | 57 | 82 |
| 2487.12.00750.032.1 | 32 | 64 | 96 |
| 2487.12.00750.038.1 | 38 | 70 | 108 |
| 2487.12.00750.050.1 | 50 | 82 | 132 |
| 2487.12.00750.063.1 | 63 | 95 | 158 |
| 2487.12.00750.075.1 | 75 | 107 | 182 |
| 2487.12.00750.080.1 | 80 | 112 | 192 |
| 2487.12.00750.100.1 | 100 | 132 | 232 |
| 2487.12.00750.125.1 | 125 | 157 | 282 |

Initial spring force
versus charge pressure

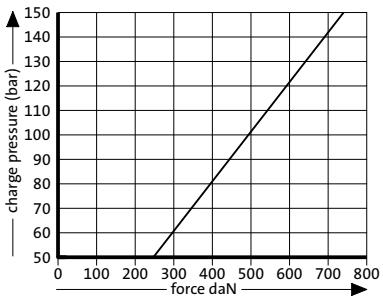


Spring force Diagram displacement versus stroke rise

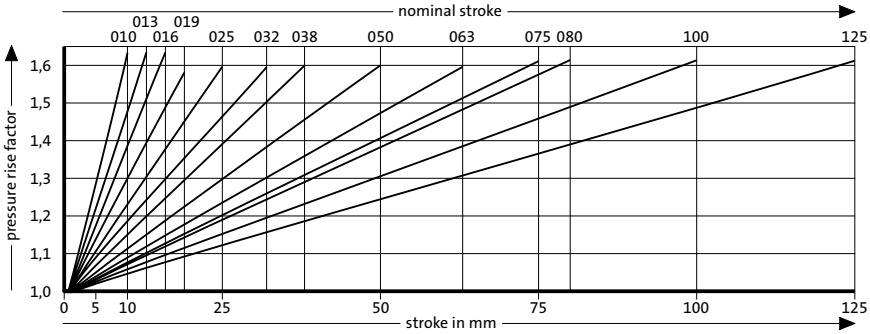


Pressure rise factor accounts for displacement but not external influences!

# GAS SPRING POWERLINE
# MOUNTING VARIATIONS

2480.007.00750

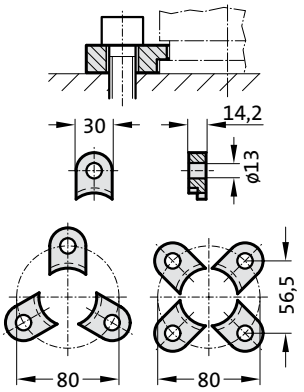


2480.008.00750 [3]

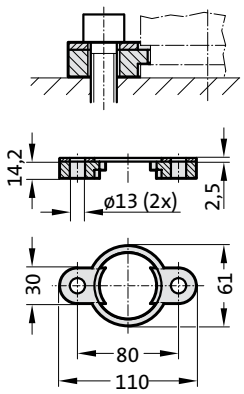


2480.010.00750.115 [3]
2480.010.00750.190* [3]

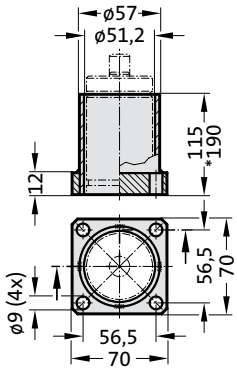


2480.022.00750

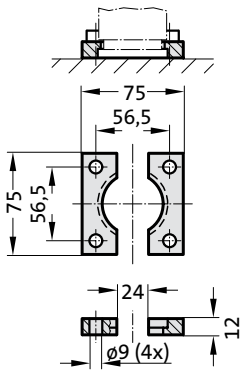


2480.044.00750 [2]

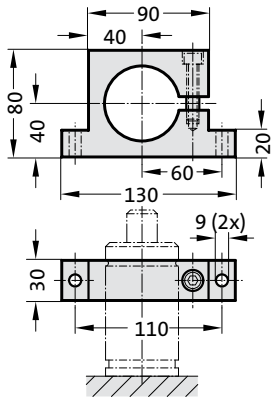


2480.044.03.00750 [2]

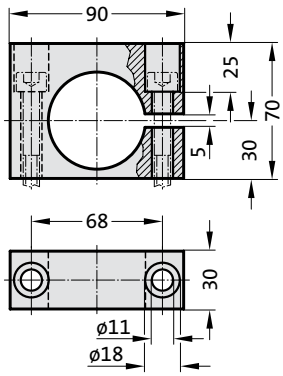


2480.045.00750 [2]

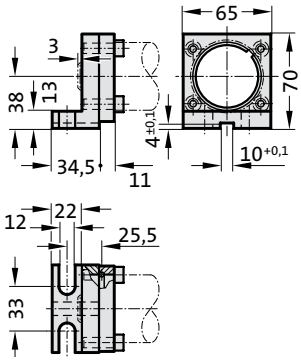


2480.047.00750 [2]

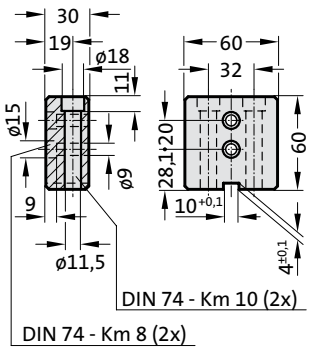


2480.055.00750

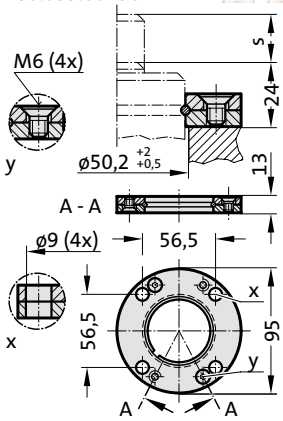


2480.057.00750

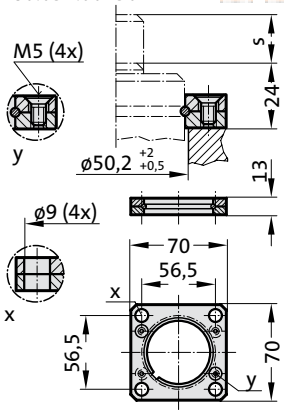


2480.064.00750 [4]

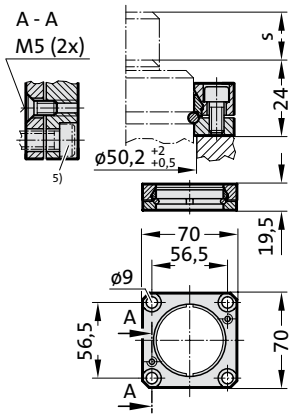


**Note:**

[2] Attention:
The spring force must be absorbed by the stop Surface!
[3] Not for use with composite connection.
[4] Square collar flange, non-rotating, fixing for composite connection.
[5] Machine screws with hexagonal socket (compact head recommended)

# GAS SPRING POWERLINE

**Note:**
Initial spring force at 150 bar = 920 daN

Order No for spare parts kit: 2487.12.01000

Gas spring without valve
Order No (example): 2487.12.01000. .1.P

Pressure medium: Nitrogen $N_2$
Max. filling pressure: 150 bar
Min. filling pressure: 25 bar
Working temperature: 0°C to +80°C
Temperature related force increase: ± 0.3%/°C
Max. recommended extensions per minute:
approx. 20 to 100 (at 20°C)
Max. piston speed: 1.6 m/s

## 2487.12.01000. .1

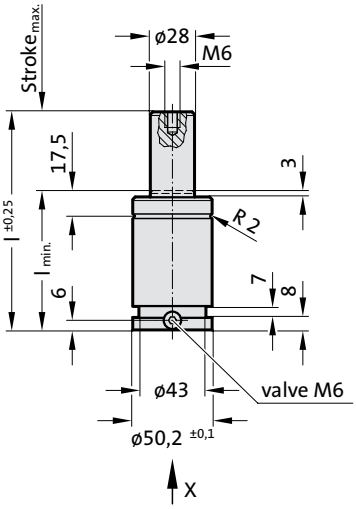

APPROVED PED 2014/68/EU | VDI | ISO

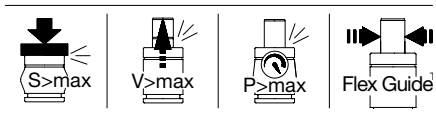


View X

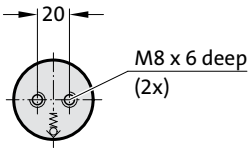


**2487.12.01000. .1**

**Gas spring POWERLINE**

| Order No | Stroke max. (s) | l min. | l |
|---|---|---|---|
| 2487.12.01000.013.1 | 13 | 51 | 64 |
| 2487.12.01000.016.1 | 16 | 54 | 70 |
| 2487.12.01000.019.1 | 19 | 57 | 76 |
| 2487.12.01000.025.1 | 25 | 63 | 88 |
| 2487.12.01000.032.1 | 32 | 70 | 102 |
| 2487.12.01000.038.1 | 38 | 76 | 114 |
| 2487.12.01000.050.1 | 50 | 88 | 138 |
| 2487.12.01000.063.1 | 63 | 101 | 164 |
| 2487.12.01000.075.1 | 75 | 113 | 188 |
| 2487.12.01000.080.1 | 80 | 118 | 198 |
| 2487.12.01000.100.1 | 100 | 138 | 238 |
| 2487.12.01000.125.1 | 125 | 163 | 288 |

Initial spring force
versus charge pressure

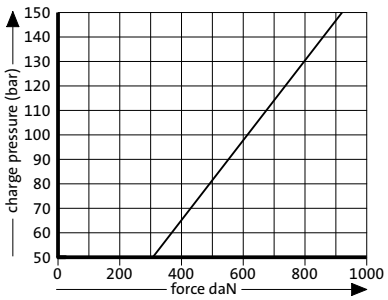


Spring force Diagram displacement versus stroke rise

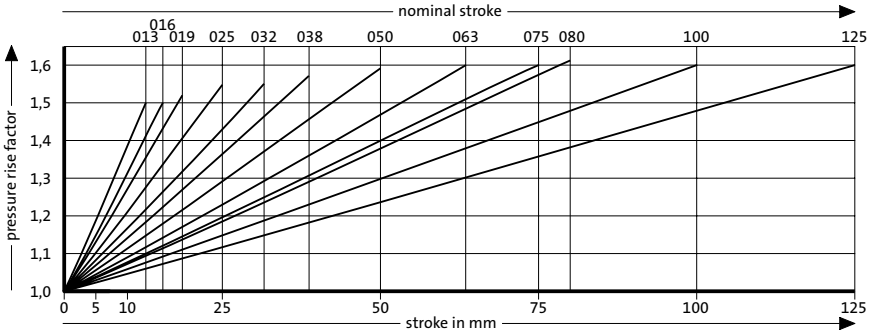


Pressure rise factor accounts for displacement but not external influences!

# GAS SPRING POWERLINE
# MOUNTING VARIATIONS

2480.007.01000

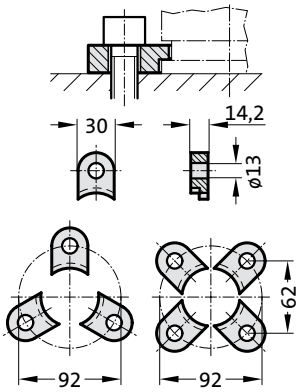


2480.022.01000

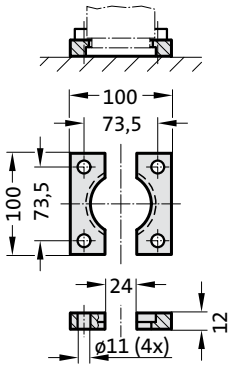


2480.044.03.01000 [2]

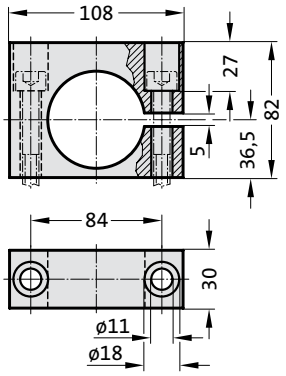


2480.057.01000

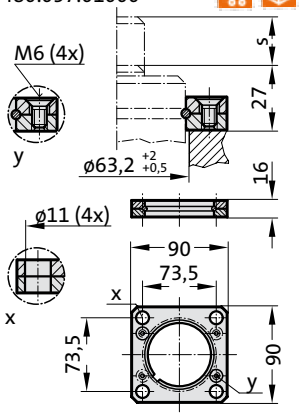


2480.057.03.01000

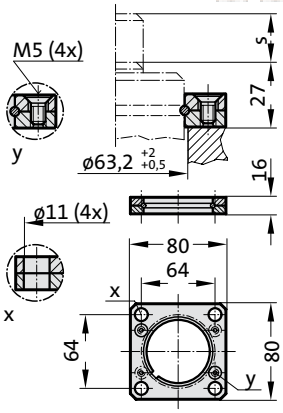


2480.064.01000 [4]

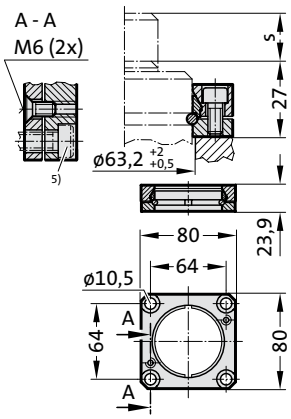


**Note:**

[2] Attention:
The spring force must be absorbed by the stop Surface!
[4] Square collar flange, non-rotating, fixing for composite connection.
[5] Machine screws with hexagonal socket (compact head recommended)

# GAS SPRING POWERLINE

**Note:**
Initial spring force at 150 bar = 1500 daN

Order No for spare parts kit: 2487.12.01500

Gas spring without valve
Order No (example): 2487.12.01500. .P

Pressure medium: Nitrogen $N_2$
Max. filling pressure: 150 bar
Min. filling pressure: 25 bar
Working temperature: 0°C to +80°C
Temperature related force increase: ± 0.3%/°C
Max. recommended extensions per minute:
approx. 50 to 100 (at 20°C)
Max. piston speed: 1.6 m/s

**2487.12.01500.**

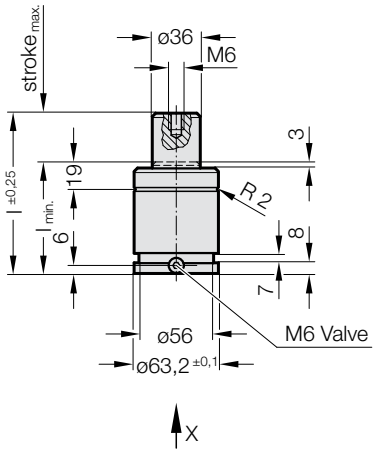


View X

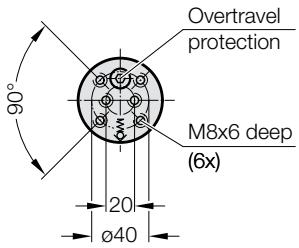

APPROVED PED 2014/68/EU | VDI | ISO

S>max | V>max | P>max | Flex Guide™

**2487.12.01500.**

**Gas spring POWERLINE**

| Order No | Stroke$_{max.}$ (s) | $l_{min.}$ | l |
|---|---|---|---|
| 2487.12.01500.013 | 13 | 57 | 70 |
| 2487.12.01500.016 | 16 | 60 | 76 |
| 2487.12.01500.019 | 19 | 63 | 82 |
| 2487.12.01500.025 | 25 | 69 | 94 |
| 2487.12.01500.032 | 32 | 76 | 108 |
| 2487.12.01500.038 | 38 | 82 | 120 |
| 2487.12.01500.050 | 50 | 94 | 144 |
| 2487.12.01500.063 | 63 | 107 | 170 |
| 2487.12.01500.075 | 75 | 119 | 194 |
| 2487.12.01500.080 | 80 | 124 | 204 |
| 2487.12.01500.100 | 100 | 144 | 244 |
| 2487.12.01500.125 | 125 | 169 | 294 |

Initial spring force
versus charge pressure

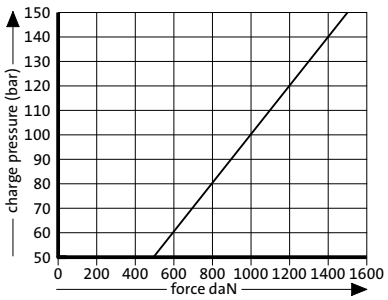


Spring force Diagram displacement versus stroke rise

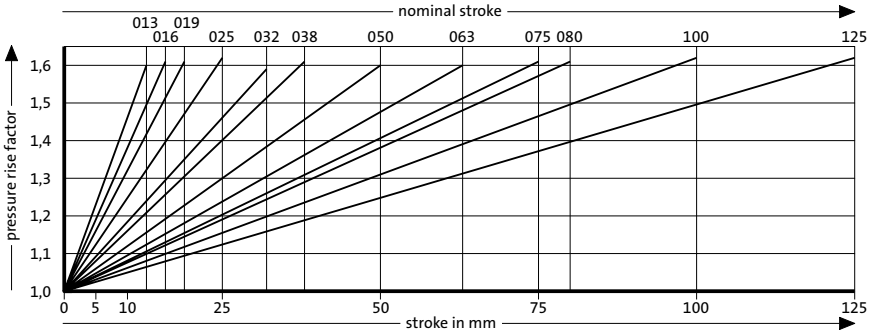


Pressure rise factor accounts for displacement but not external influences!

# GAS SPRING POWERLINE
# MOUNTING VARIATIONS

2480.007.01500

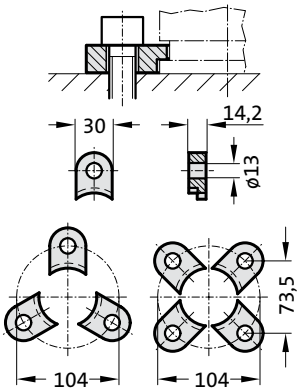


2480.008.01500 [3]

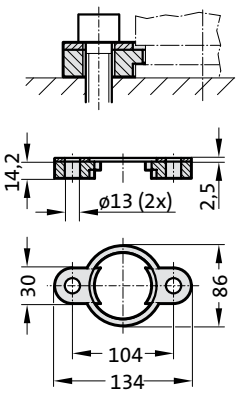


2480.010.01500.130 [3]
2480.010.01500.205* [3]

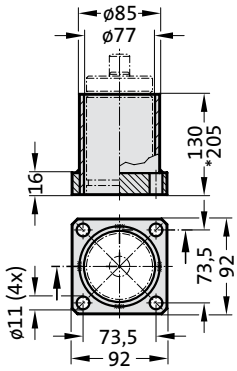


2480.022.01500

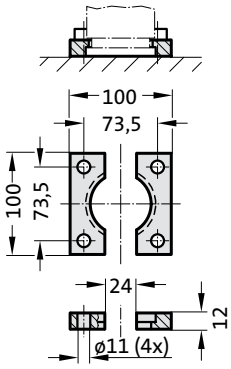


2480.044.01500 [2]

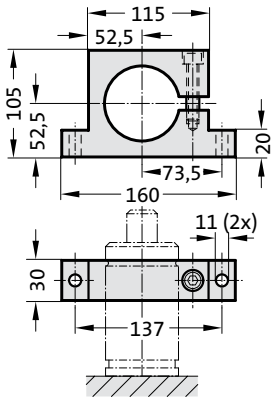


2480.044.03.01500 [2]

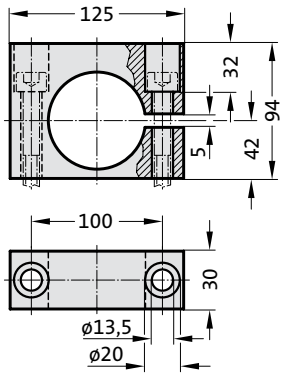


2480.045.01500 [2]

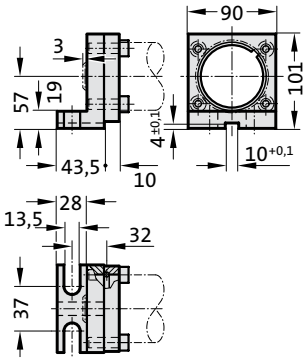


2480.047.01500 [2]

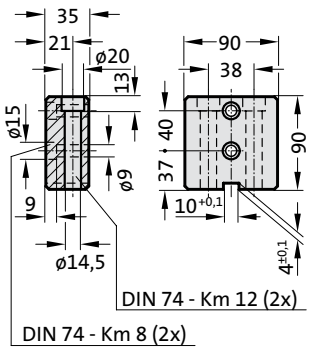


2480.055.01500

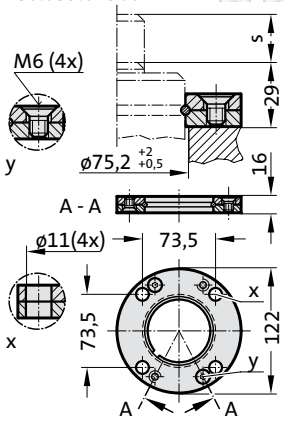


2480.057.01500

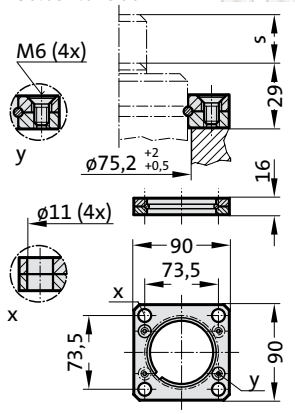


2480.064.01500 [4]

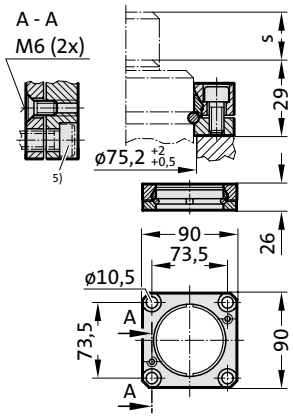


**Note:**

[2] Attention:
The spring force must be absorbed by the stop Surface!
[3] Not for use with composite connection.
[4] Square collar flange, non-rotating, fixing for composite connection.
[5] Machine screws with hexagonal socket (compact head recommended)

# GAS SPRING POWERLINE

**Note:**
Initial spring force at 150 bar = 2400 daN

Order No for spare parts kit: 2487.12.02400

Gas spring without valve
Order No (example): 2487.12.02400. .P

Pressure medium: Nitrogen $N_2$
Max. filling pressure: 150 bar
Min. filling pressure: 25 bar
Working temperature: 0°C to +80°C
Temperature related force increase: ± 0.3%/°C
Max. recommended extensions per minute:
approx. 20 to 100 (at 20°C)
Max. piston speed: 1.6 m/s

2487.12.02400.

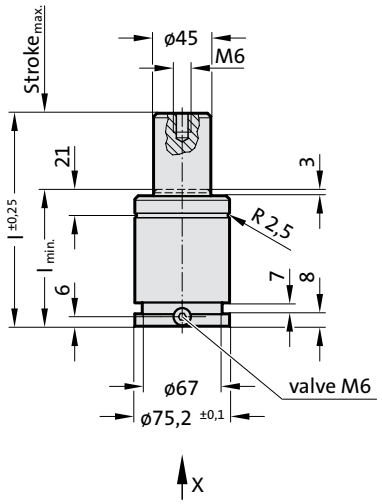

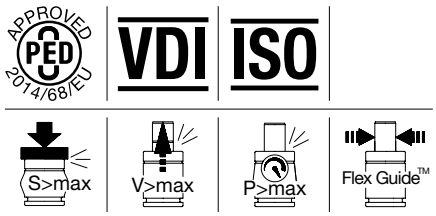


View X

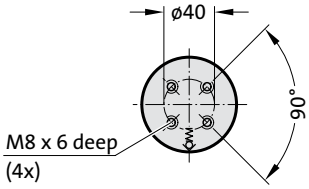


**2487.12.02400.**

**Gas spring POWERLINE**

| Order No | Stroke$_{max.}$ (s) | $l_{min.}$ | l |
|---|---|---|---|
| 2487.12.02400.016 | 16 | 61 | 77 |
| 2487.12.02400.019 | 19 | 64 | 83 |
| 2487.12.02400.025 | 25 | 70 | 95 |
| 2487.12.02400.032 | 32 | 77 | 109 |
| 2487.12.02400.038 | 38 | 83 | 121 |
| 2487.12.02400.050 | 50 | 95 | 145 |
| 2487.12.02400.063 | 63 | 108 | 171 |
| 2487.12.02400.075 | 75 | 120 | 195 |
| 2487.12.02400.080 | 80 | 125 | 205 |
| 2487.12.02400.100 | 100 | 145 | 245 |
| 2487.12.02400.125 | 125 | 170 | 295 |

Initial spring force
versus charge pressure

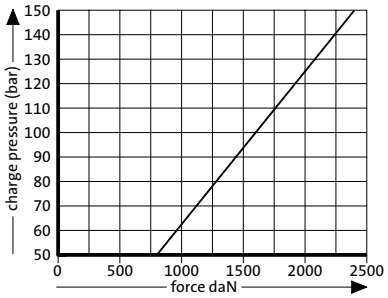


Spring force Diagram displacement versus stroke rise

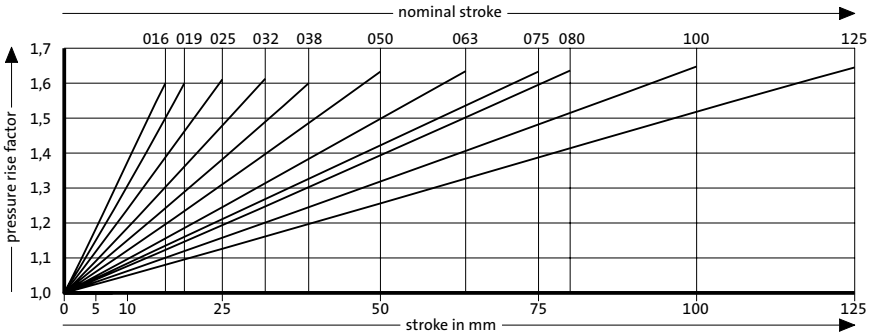


Pressure rise factor accounts for displacement but not external influences!

# GAS SPRING POWERLINE
# MOUNTING VARIATIONS

2480.007.03000

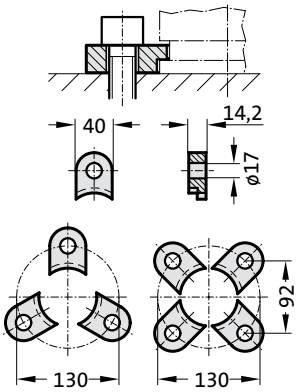


2480.008.03000 [3]

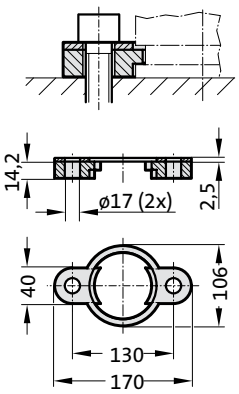


2480.010.03000.140 [3]
2480.010.03000.215* [3]

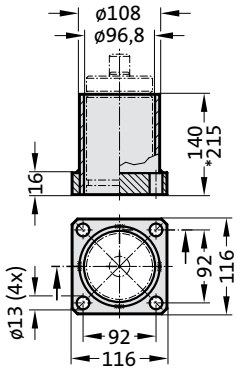


2480.011.03000

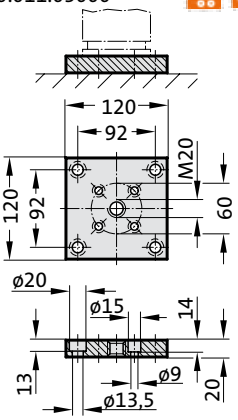


2480.011.03000.2

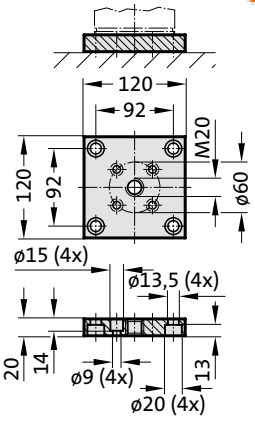


2480.022.03000

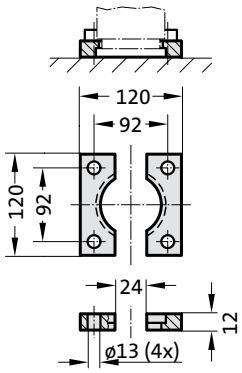


2480.044.03000 [2]

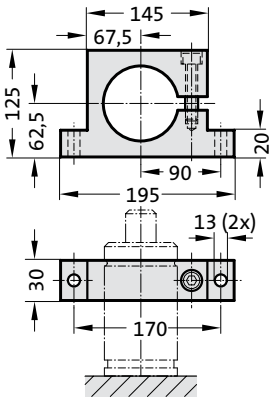


2480.044.03.03000 [2]

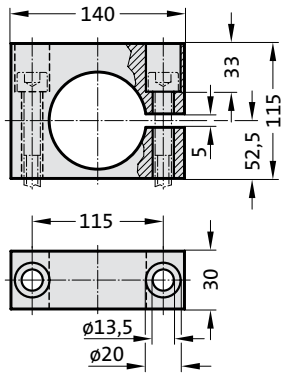


2480.045.03000 [2]

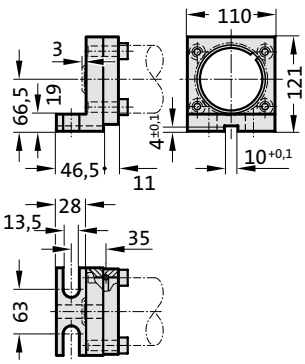


2480.047.03000 [2]

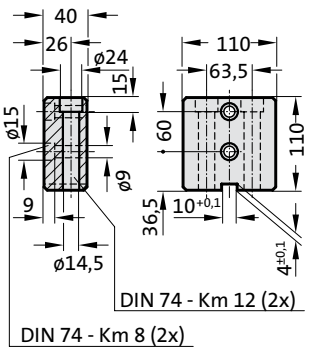


2480.055.03000

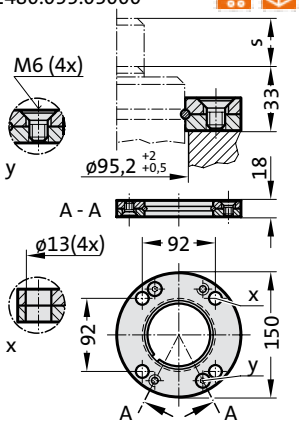


2480.057.03000

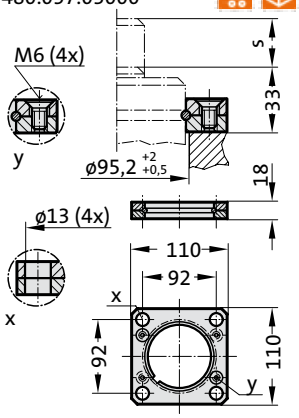


2480.064.03000 [4]

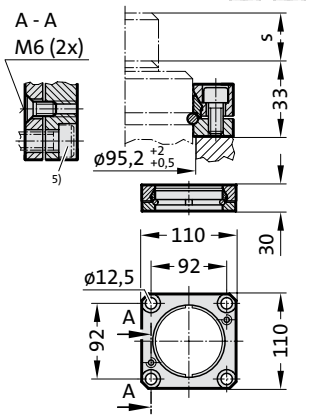


**Note:**

[2] Attention:
The spring force must be absorbed by the stop Surface!
[3] Not for use with composite connection.
[4] Square collar flange, non-rotating, fixing for composite connection.
[5] Machine screws with hexagonal socket (compact head recommended)

# GAS SPRING POWERLINE

**Note:**
Initial spring force at 150 bar = 4200 daN

Order No for spare parts kit: 2487.12.04200

Gas spring without valve
Order No (example): 2487.12.04200. .P

Pressure medium: Nitrogen $N_2$
Max. filling pressure: 150 bar
Min. filling pressure: 25 bar
Working temperature: 0°C to +80°C
Temperature related force increase: ± 0.3%/°C
Max. recommended extensions per minute:
approx. 20 to 100 (at 20°C)
Max. piston speed: 1.6 m/s

## 2487.12.04200.

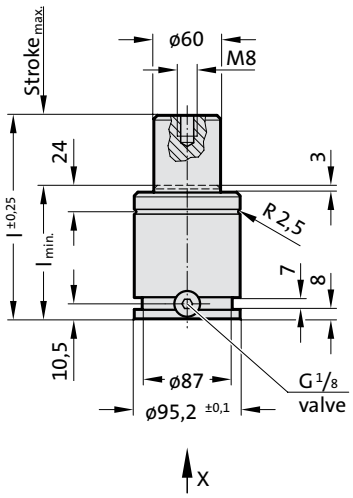

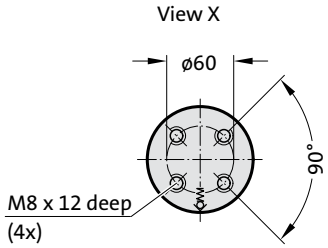


**2487.12.04200.**

**Gas spring POWERLINE**

| Order No | Stroke$_{max.}$ (s) | $l_{min.}$ | l |
|---|---|---|---|
| 2487.12.04200.016 | 16 | 74 | 90 |
| 2487.12.04200.019 | 19 | 77 | 96 |
| 2487.12.04200.025 | 25 | 83 | 108 |
| 2487.12.04200.032 | 32 | 90 | 122 |
| 2487.12.04200.038 | 38 | 96 | 134 |
| 2487.12.04200.050 | 50 | 108 | 158 |
| 2487.12.04200.063 | 63 | 121 | 184 |
| 2487.12.04200.075 | 75 | 133 | 208 |
| 2487.12.04200.080 | 80 | 138 | 218 |
| 2487.12.04200.100 | 100 | 158 | 258 |
| 2487.12.04200.125 | 125 | 183 | 308 |

Initial spring force
versus charge pressure

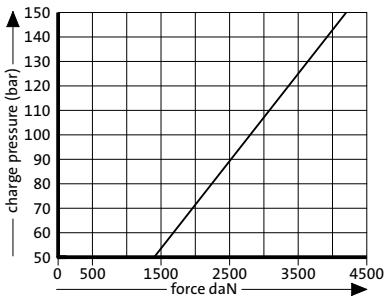


Spring force Diagram displacement versus stroke rise

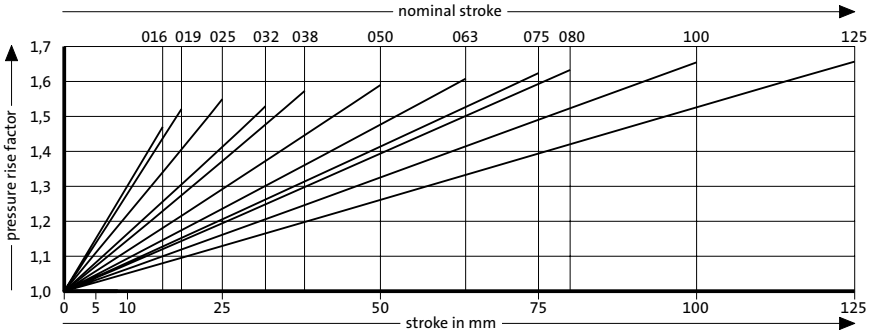


Pressure rise factor accounts for displacement but not external influences!

# GAS SPRING POWERLINE
# MOUNTING VARIATIONS

2480.007.05000

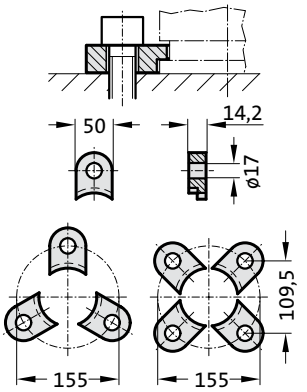


2480.008.05000 [3]

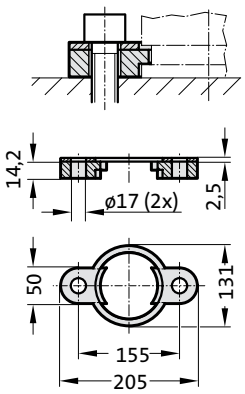


2480.010.05000.160 [3]

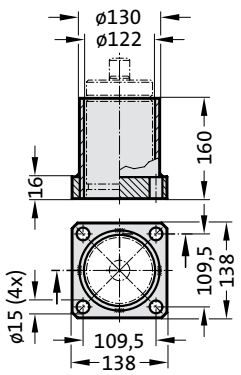


2480.011.05000

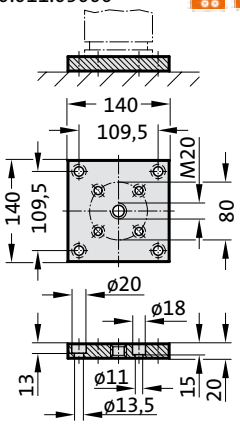


2480.011.05000.2

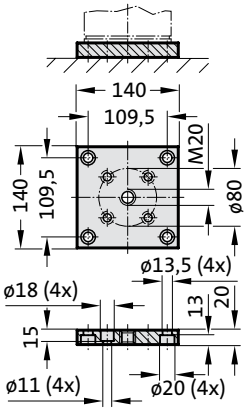


2480.022.05000

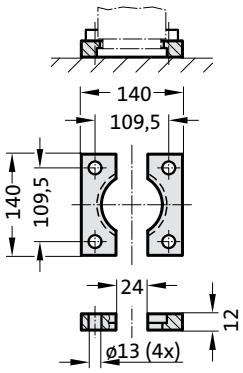


2480.044.05000 [2]

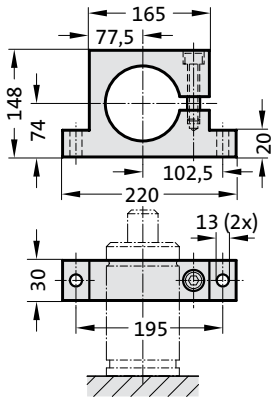


2480.044.03.05000 [2]

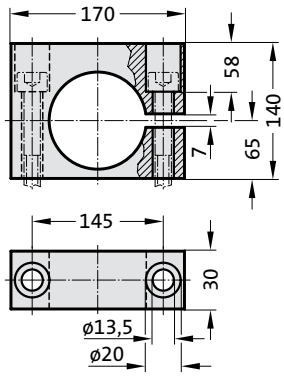


2480.045.05000 [2]

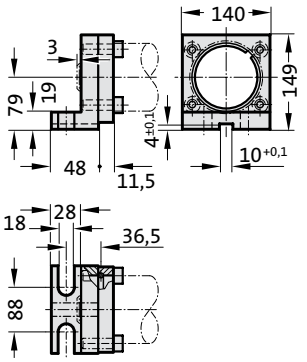


2480.047.05000 [2]

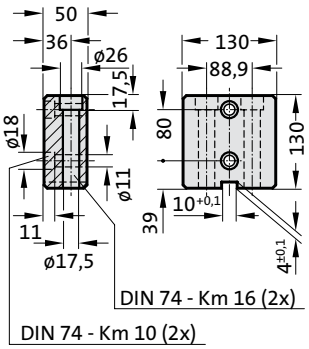


2480.055.05000

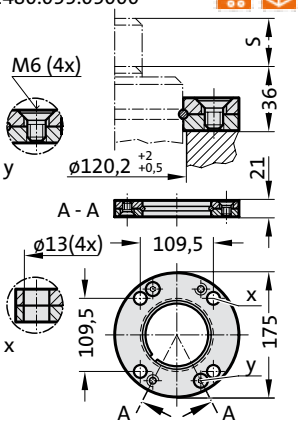


2480.057.05000

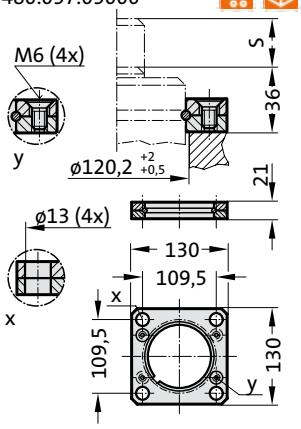


2480.064.05000 [4]

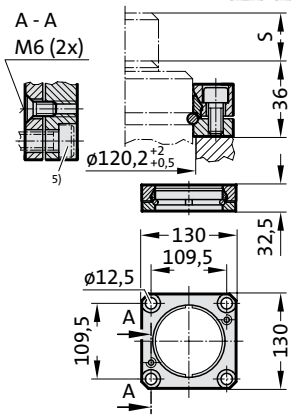


**Note:**

[2] Attention:
The spring force must be absorbed by the stop Surface!
[3] Not for use with composite connection.
[4] Square collar flange, non-rotating, fixing for composite connection.
[5] Machine screws with hexagonal socket (compact head recommended)

# GAS SPRING POWERLINE

**Note:**
Initial spring force at 150 bar = 6630 daN

Order No for spare parts kit: 2487.12.06600

Gas spring without valve
Order No (example): 2487.12.06600. .P

Pressure medium: Nitrogen $N_2$
Max. filling pressure: 150 bar
Min. filling pressure: 25 bar
Working temperature: 0°C to +80°C
Temperature related force increase: ± 0.3%/°C
Max. recommended extensions per minute:
approx. 20 to 100 (at 20°C)
Max. piston speed: 1.6 m/s

## 2487.12.06600.

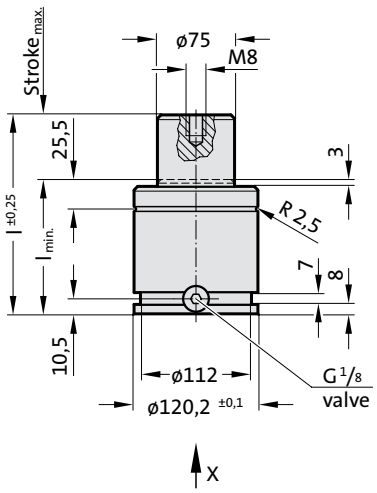

APPROVED PED 2014/68/EU | VDI | ISO

S>max | V>max | P>max | Flex Guide™

View X

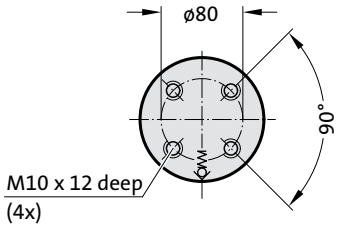


**2487.12.06600.**

**Gas spring POWERLINE**

| Order No | Stroke$_{max.}$ (s) | $l_{min.}$ | l |
|---|---|---|---|
| 2487.12.06600.016 | 16 | 84 | 100 |
| 2487.12.06600.019 | 19 | 87 | 106 |
| 2487.12.06600.025 | 25 | 93 | 118 |
| 2487.12.06600.032 | 32 | 100 | 132 |
| 2487.12.06600.038 | 38 | 106 | 144 |
| 2487.12.06600.050 | 50 | 118 | 168 |
| 2487.12.06600.063 | 63 | 131 | 194 |
| 2487.12.06600.075 | 75 | 143 | 218 |
| 2487.12.06600.080 | 80 | 148 | 228 |
| 2487.12.06600.100 | 100 | 168 | 268 |
| 2487.12.06600.125 | 125 | 193 | 318 |

Initial spring force
versus charge pressure

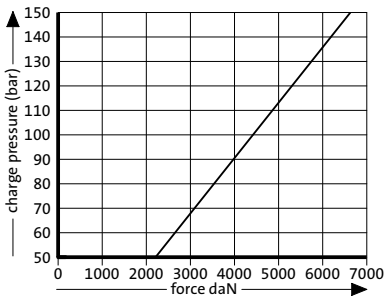


Spring force Diagram displacement versus stroke rise

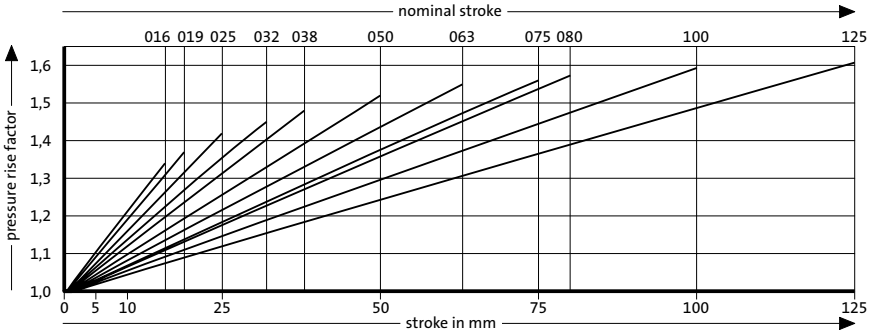


Pressure rise factor accounts for displacement but not external influences!

# GAS SPRING POWERLINE
# MOUNTING VARIATIONS

2480.007.07500

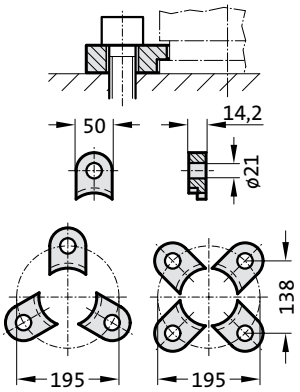


2480.008.07500 3)

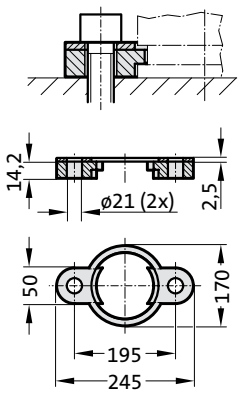


2480.011.07500

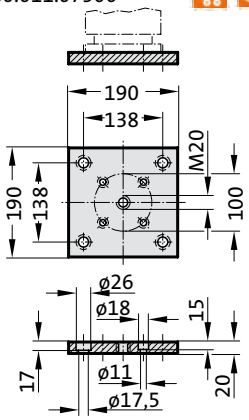


2480.011.07500.2

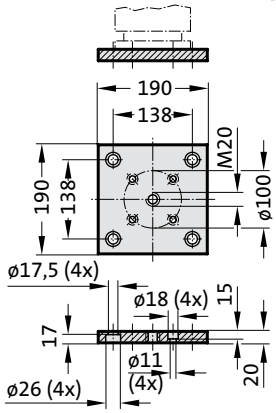


2480.011.03.07500

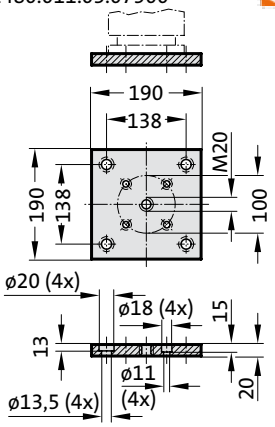


2480.011.03.07500.2

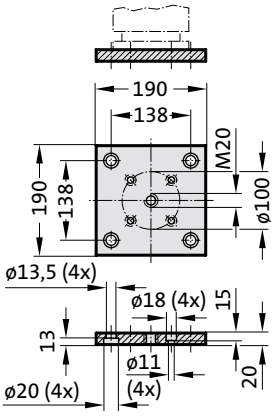


2480.022.07500

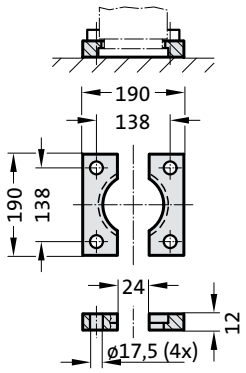


2480.044.07500 2)

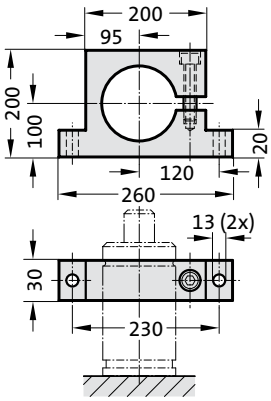


2480.044.03.07500 2)

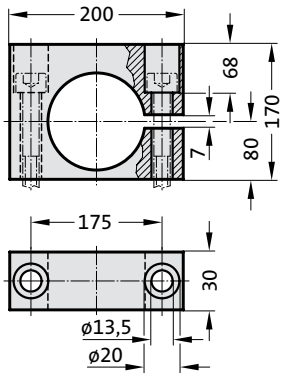


2480.055.07500

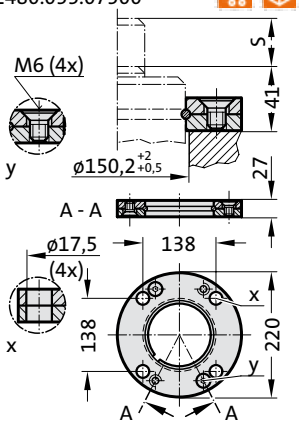


2480.057.07500

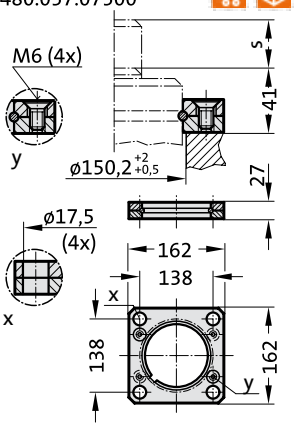


2480.064.07500 4)

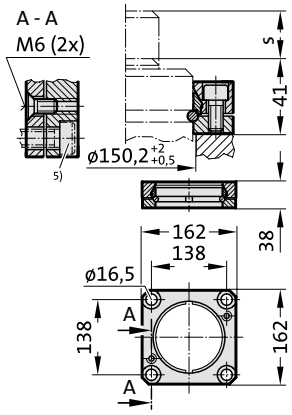


**Note:**

2) Attention:
The spring force must be absorbed by the stop Surface!

3) Not for use with composite connection.

4) Square collar flange, non-rotating, fixing for composite connection.

5) Machine screws with hexagonal socket (compact head recommended)

# GAS SPRING POWERLINE

**Note:**
Initial spring force at 150 bar = 9500 daN

Order No for spare parts kit: 2487.12.09500

Gas spring without valve
Order No (example): 2487.12.09500. .P

Pressure medium: Nitrogen $N_2$
Max. filling pressure: 150 bar
Min. filling pressure: 25 bar
Working temperature: 0°C to +80°C
Temperature related force increase: ± 0.3%/°C
Max. recommended extensions per minute:
approx. 20 to 100 (at 20°C)
Max. piston speed: 1.6 m/s

**2487.12.09500.**

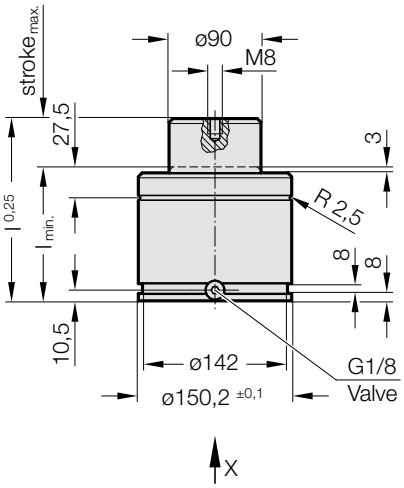


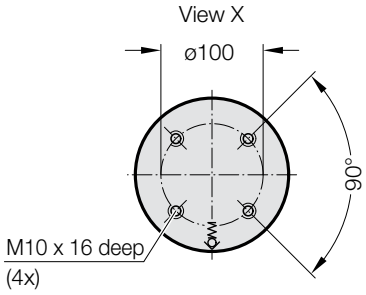

APPROVED PED 2014/68/EU | VDI | ISO

S>max | V>max | P>max | Flex Guide™

**2487.12.09500.**

**Gas spring POWERLINE**

| Order No | Stroke$_{max.}$ (s) | $l_{min.}$ | l |
|---|---|---|---|
| 2487.12.09500.019 | 19 | 97 | 116 |
| 2487.12.09500.025 | 25 | 103 | 128 |
| 2487.12.09500.032 | 32 | 110 | 142 |
| 2487.12.09500.038 | 38 | 116 | 154 |
| 2487.12.09500.050 | 50 | 128 | 178 |
| 2487.12.09500.063 | 63 | 141 | 204 |
| 2487.12.09500.075 | 75 | 153 | 228 |
| 2487.12.09500.080 | 80 | 158 | 238 |
| 2487.12.09500.100. | 100 | 178 | 278 |
| 2487.12.09500.125. | 125 | 203 | 328 |

Initial spring force
versus charge pressure

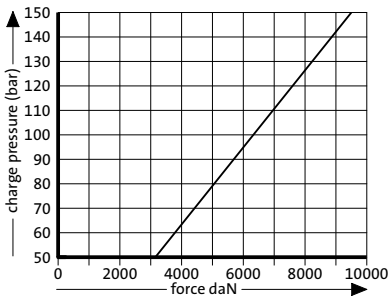


Spring force Diagram displacement versus stroke rise

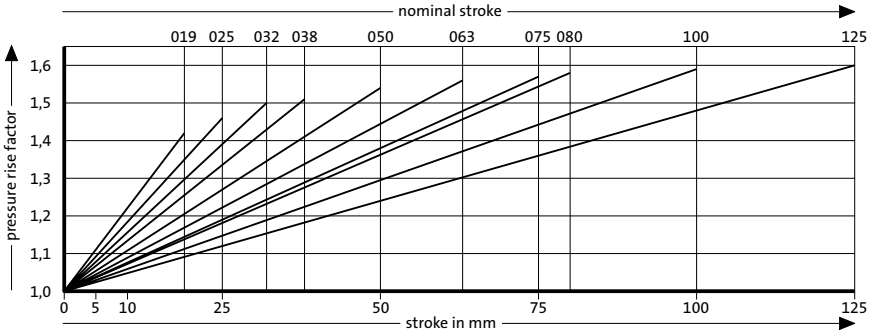


Pressure rise factor accounts for displacement but not external influences!

# GAS SPRING POWERLINE
# MOUNTING VARIATIONS

2480.007.10000

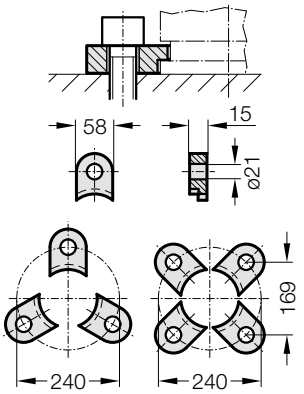


2480.011.10000

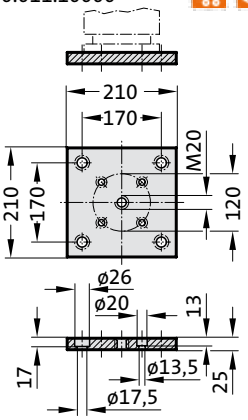


2480.011.10000.2

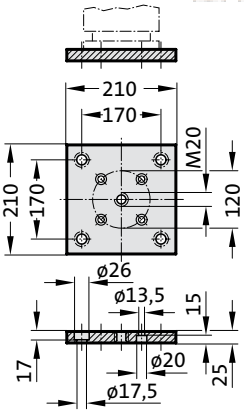


2480.022.10000

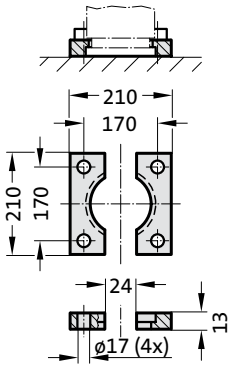


2480.057.10000

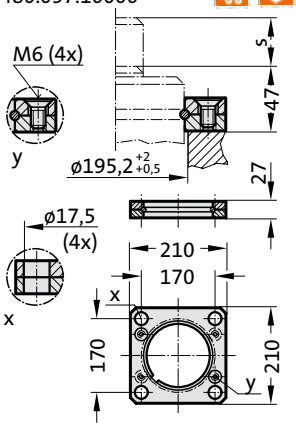




subject to alterations

# GAS SPRING POWERLINE

**Note:**
Initial spring force at 150 bar = 20000 daN

Order No for spare parts kit: 2487.12.20000

Gas spring without valve
Order No (example): 2487.12.20000. .P

Pressure medium: Nitrogen $N_2$
Max. filling pressure: 150 bar
Min. filling pressure: 25 bar
Working temperature: 0°C to +80°C
Temperature related force increase: ± 0.3%/°C
Max. recommended extensions per minute:
approx. 10 to 100 (at 20°C)
Max. piston speed: 1.6 m/s

## 2487.12.20000.

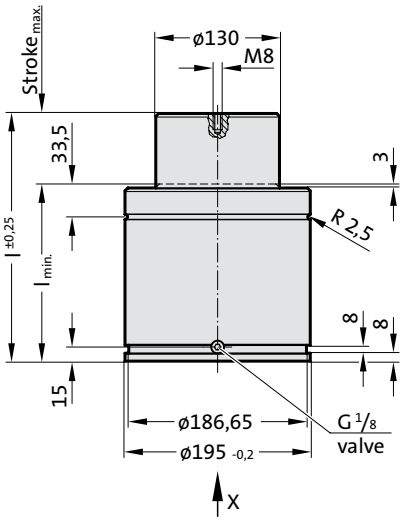

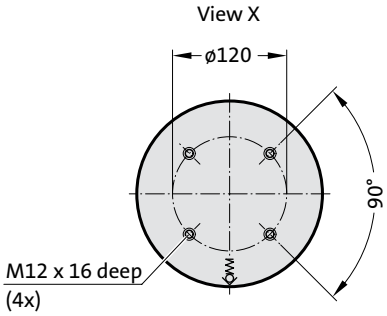


APPROVED PED 2014/68/EU | ISO

S>max | V>max | P>max | Flex Guide™

**2487.12.20000.**

**Gas spring POWERLINE**

| Order No | Stroke$_{max.}$ (s) | $l_{min.}$ | l |
|---|---|---|---|
| 2487.12.20000.019 | 19 | 129 | 148 |
| 2487.12.20000.025 | 25 | 135 | 160 |
| 2487.12.20000.032 | 32 | 142 | 174 |
| 2487.12.20000.038 | 38 | 148 | 186 |
| 2487.12.20000.050 | 50 | 160 | 210 |
| 2487.12.20000.063 | 63 | 173 | 236 |
| 2487.12.20000.075 | 75 | 185 | 260 |
| 2487.12.20000.080 | 80 | 190 | 270 |
| 2487.12.20000.100 | 100 | 210 | 310 |
| 2487.12.20000.125 | 125 | 235 | 360 |

Initial spring force
versus charge pressure

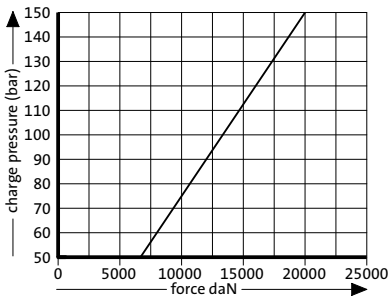


Spring force Diagram displacement versus stroke rise

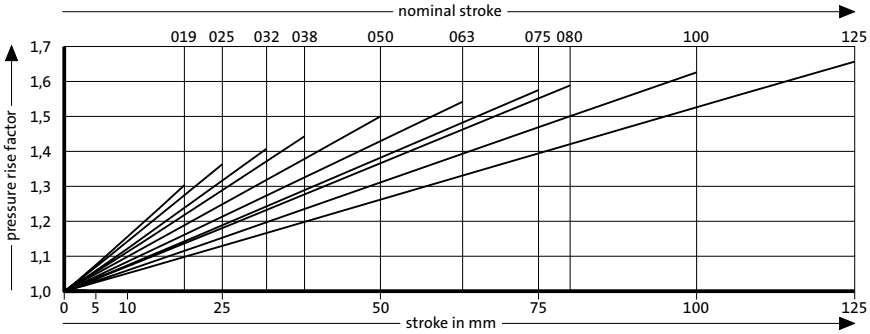


Pressure rise factor accounts for displacement but not external influences!

# GAS SPRINGS
# POWERLINE, WITH REINFORCED SPRING BASE

# GAS SPRING POWERLINE WITH REINFORCED SPRING BASE MOUNTING VARIATIONS

2480.022.00150

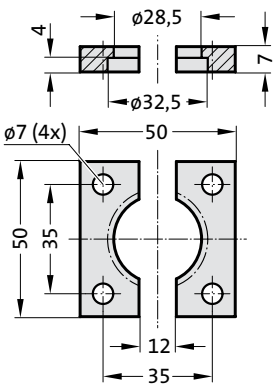


2480.044.00150[2)]

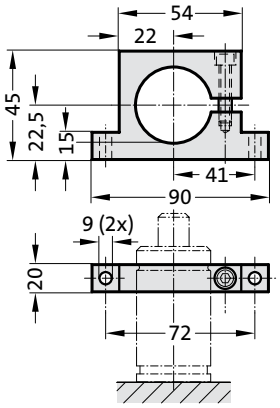


2480.044.03.00150[2)]

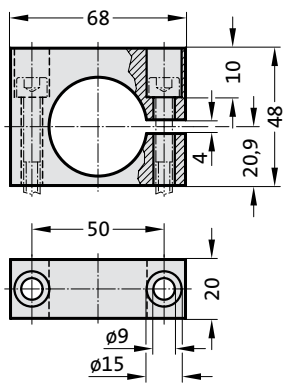


2480.055.00150

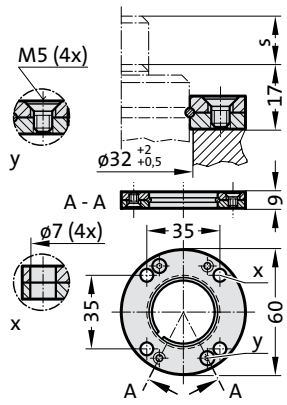


2480.057.00150

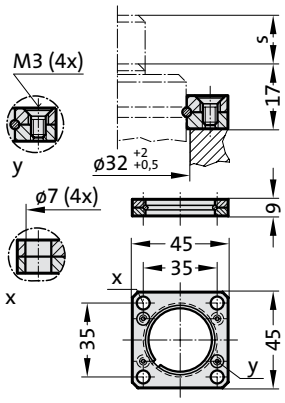


**Note:**

[2)] Attention:
The spring force must be absorbed by the stop Surface!

**Mounting examples:**

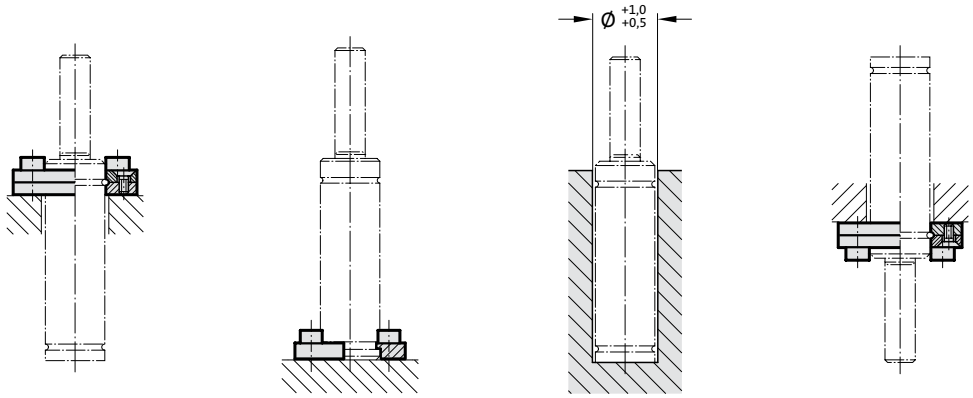

# GAS SPRING POWERLINE WITH REINFORCED SPRING BASE

**Note:**
Initial spring force at 180 bar = 350 daN

Order No for spare parts kit: 2487.12.00350

Pressure medium: Nitrogen $N_2$
Max. filling pressure: 180 bar
Min. filling pressure: 25 bar
Working temperature: 0°C to +80°C
Temperature related force increase: ± 0.3%/°C
Max. recommended extensions per minute:
approx. 20 to 100 (at 20°C)
Max. piston speed: 1.6 m/s

2487.12.33.00350.

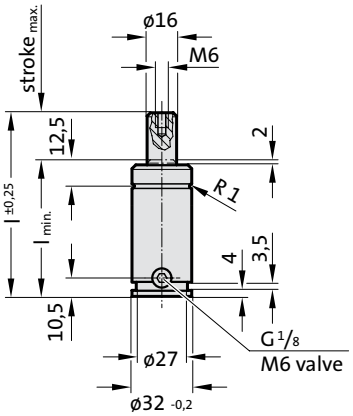

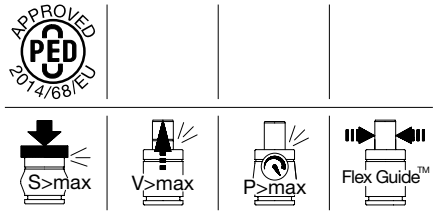


View X

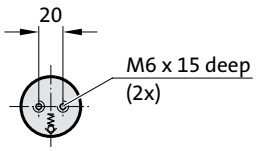


**2487.12.33.00350.**

**Gas spring POWERLINE with reinforced spring base**

| Order No | Stroke max. (s) | l min. | l |
|---|---|---|---|
| 2487.12.33.00350.010 | 10 | 50 | 60 |
| 2487.12.33.00350.013 | 13 | 53 | 66 |
| 2487.12.33.00350.016 | 16 | 56 | 72 |
| 2487.12.33.00350.019 | 19 | 59 | 78 |
| 2487.12.33.00350.025 | 25 | 65 | 90 |
| 2487.12.33.00350.032 | 32 | 72 | 104 |
| 2487.12.33.00350.038 | 38 | 78 | 116 |
| 2487.12.33.00350.050 | 50 | 90 | 140 |
| 2487.12.33.00350.063 | 63 | 103 | 166 |
| 2487.12.33.00350.075 | 75 | 115 | 190 |
| 2487.12.33.00350.080 | 80 | 120 | 200 |
| 2487.12.33.00350.100 | 100 | 140 | 240 |
| 2487.12.33.00350.125 | 125 | 165 | 290 |

Initial spring force
versus charge pressure

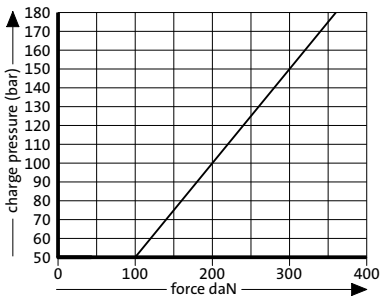


Spring force Diagram displacement versus stroke rise

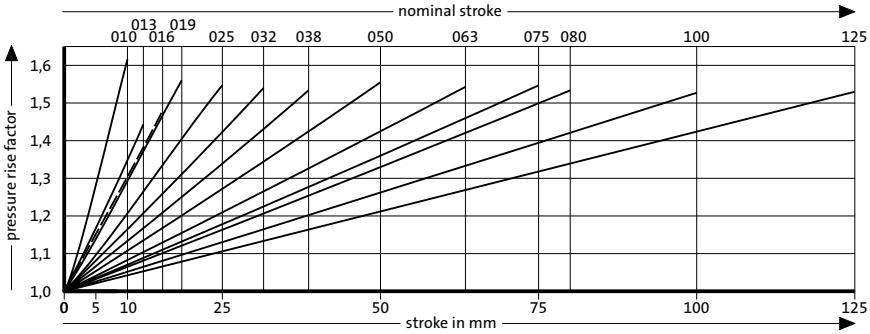


Pressure rise factor accounts for displacement but not external influences!

# GAS SPRING POWERLINE WITH REINFORCED SPRING BASE
# MOUNTING VARIATIONS

2480.007.00250

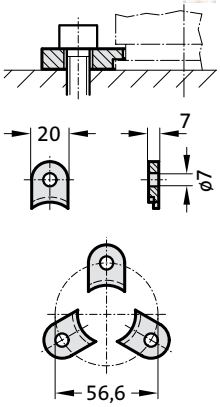


2480.008.00250 [3]

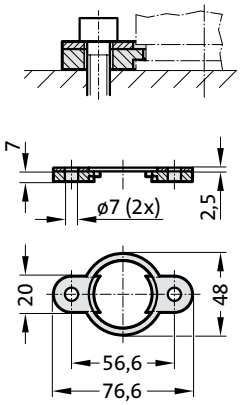


2480.010.00250.055 [3]
2480.010.00250.095* [3]

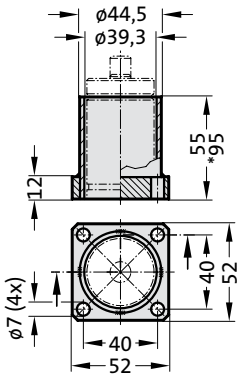


2480.022.00250

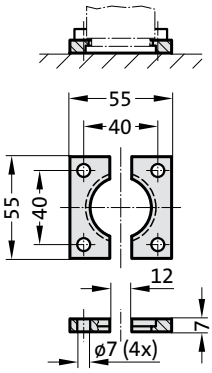


2480.044.00250 [2]

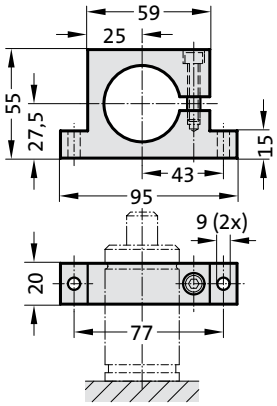


2480.044.03.00250 [2]

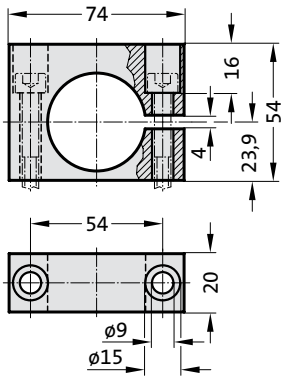


2480.055.00250

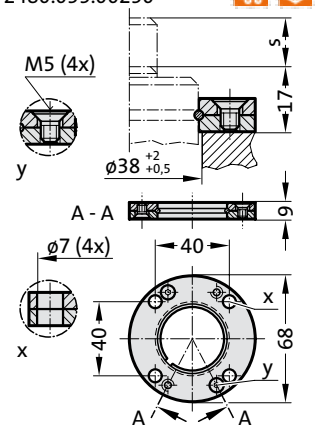


2480.057.00250

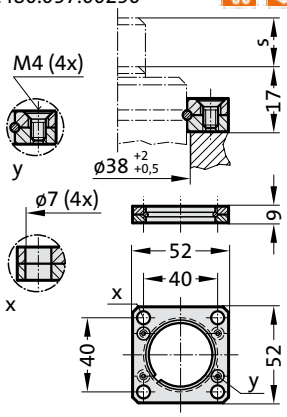


**Note:**

[2] Attention:
The spring force must be absorbed by the stop Surface!
[3] Not for use with composite connection.

# GAS SPRING POWERLINE WITH REINFORCED SPRING BASE

**Note:**
Initial spring force at 150 bar = 470 daN

Order No for spare parts kit: 2487.12.00500

Pressure medium: Nitrogen $N_2$
Max. filling pressure: 150 bar
Min. filling pressure: 25 bar
Working temperature: 0°C to +80°C
Temperature related force increase: ± 0.3%/°C
Max. recommended extensions per minute:
approx. 20 to 100 (at 20°C)
Max. piston speed: 1.6 m/s

2487.12.33.00500.

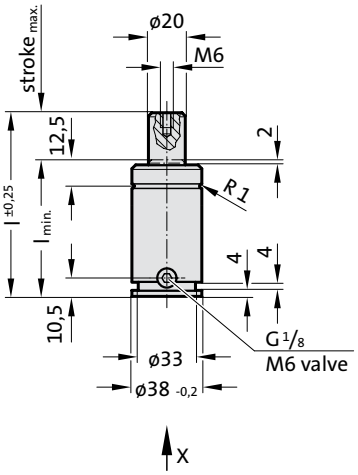

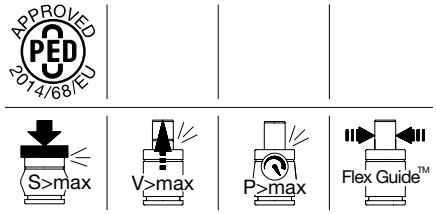


View X

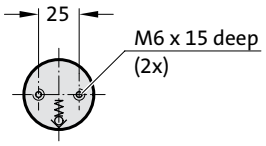


**2487.12.33.00500.**

**Gas spring POWERLINE with reinforced spring base**

| Order No | Stroke$_{max.}$ (s) | $l_{min.}$ | l |
|---|---|---|---|
| 2487.12.33.00500.010 | 10 | 50 | 60 |
| 2487.12.33.00500.013 | 13 | 53 | 66 |
| 2487.12.33.00500.016 | 16 | 56 | 72 |
| 2487.12.33.00500.019 | 19 | 59 | 78 |
| 2487.12.33.00500.025 | 25 | 65 | 90 |
| 2487.12.33.00500.032 | 32 | 72 | 104 |
| 2487.12.33.00500.038 | 38 | 78 | 116 |
| 2487.12.33.00500.050 | 50 | 90 | 140 |
| 2487.12.33.00500.063 | 63 | 103 | 166 |
| 2487.12.33.00500.075 | 75 | 115 | 190 |
| 2487.12.33.00500.080 | 80 | 120 | 200 |
| 2487.12.33.00500.100 | 100 | 140 | 240 |
| 2487.12.33.00500.125 | 125 | 165 | 290 |

Initial spring force
versus charge pressure

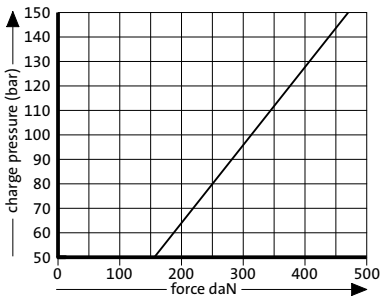


Spring force Diagram displacement versus stroke rise

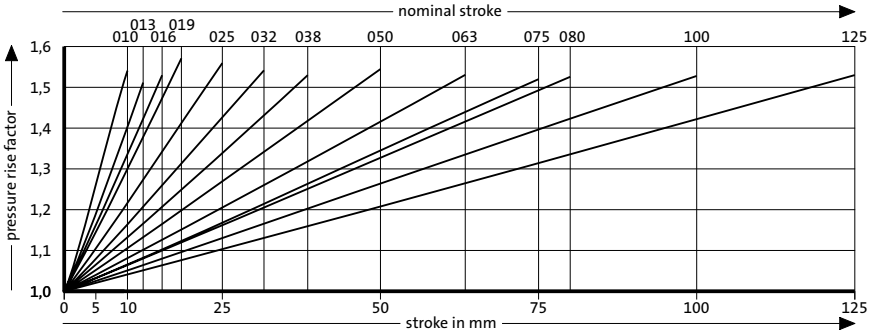


Pressure rise factor accounts for displacement but not external influences!

# GAS SPRING POWERLINE WITH REINFORCED SPRING BASE MOUNTING VARIATIONS

2480.007.00500

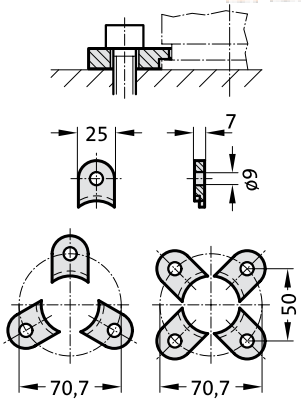


2480.008.00500 [3]

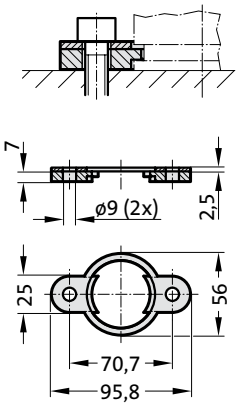


2480.010.00500.095 [3]
2480.010.00500.180* [3]

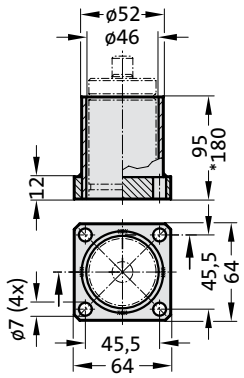


2480.011.00500

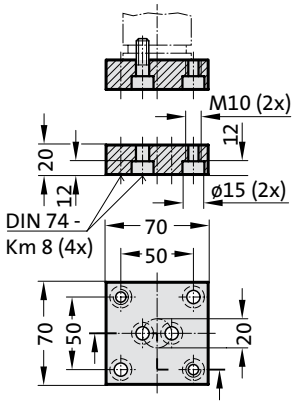


2480.011.00500.1

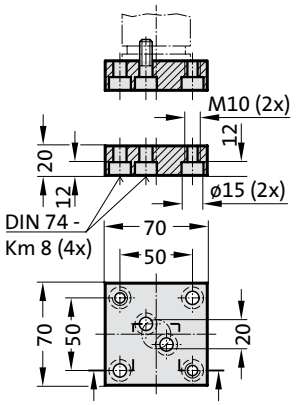


2480.011.00500.2

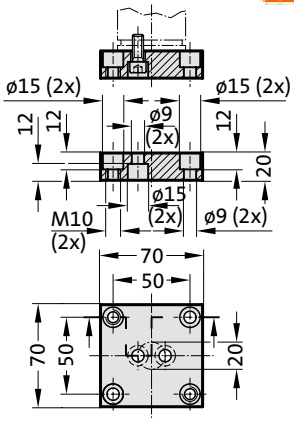


2480.022.00500

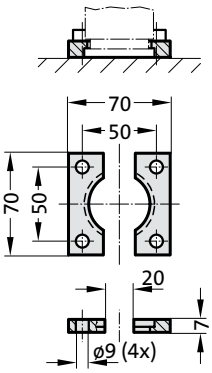


2480.044.00500 [2]

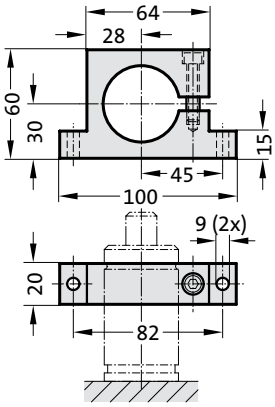


2480.044.03.00500 [2]

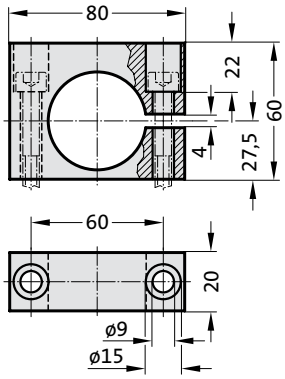


2480.055.00500

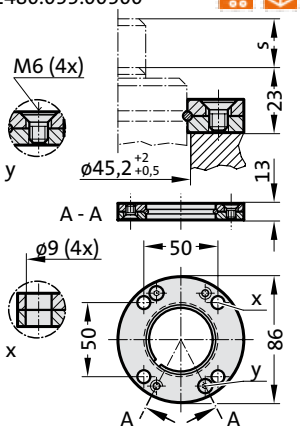


2480.057.00500

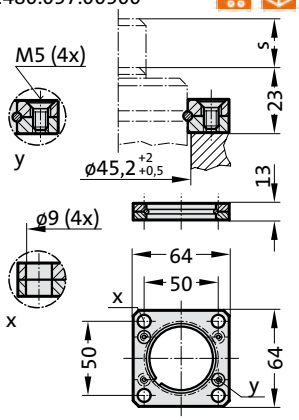


2480.064.00500 [4]

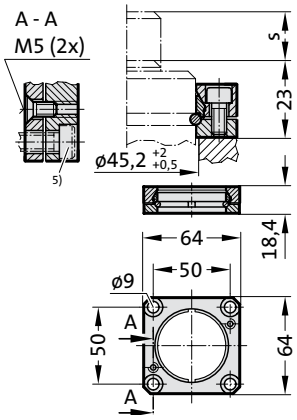


**Note:**

[2] Attention:
The spring force must be absorbed by the stop Surface!
[3] Not for use with composite connection.
[4] Square collar flange, non-rotating, fixing for composite connection.
[5] Machine screws with hexagonal socket (compact head recommended)

# GAS SPRING POWERLINE WITH REINFORCED SPRING BASE

**Note:**
Initial spring force at 150 bar = 750 daN

Order No for spare parts kit: 2487.12.00750

Pressure medium: Nitrogen $N_2$
Max. filling pressure: 150 bar
Min. filling pressure: 25 bar
Working temperature: 0°C to +80°C
Temperature related force increase: ± 0.3%/°C
Max. recommended extensions per minute:
approx. 20 to 100 (at 20°C)
Max. piston speed: 1.6 m/s

2487.12.33.00750.

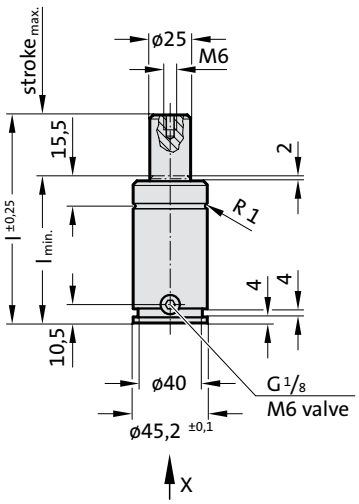

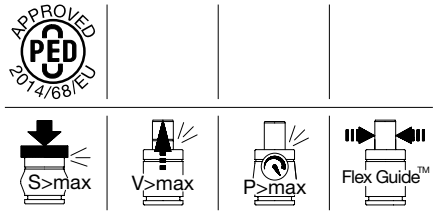


View X

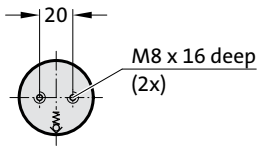


**2487.12.33.00750.**

**Gas spring POWERLINE with reinforced spring base**

| Order No | Stroke$_{max.}$ (s) | $l_{min.}$ | l |
|---|---|---|---|
| 2487.12.33.00750.010 | 10 | 57 | 67 |
| 2487.12.33.00750.013 | 13 | 60 | 73 |
| 2487.12.33.00750.016 | 16 | 63 | 79 |
| 2487.12.33.00750.019 | 19 | 66 | 85 |
| 2487.12.33.00750.025 | 25 | 72 | 97 |
| 2487.12.33.00750.032 | 32 | 79 | 111 |
| 2487.12.33.00750.038 | 38 | 85 | 123 |
| 2487.12.33.00750.050 | 50 | 97 | 147 |
| 2487.12.33.00750.063 | 63 | 110 | 173 |
| 2487.12.33.00750.075 | 75 | 122 | 197 |
| 2487.12.33.00750.080 | 80 | 127 | 207 |
| 2487.12.33.00750.100 | 100 | 147 | 247 |
| 2487.12.33.00750.125 | 125 | 172 | 297 |

Initial spring force
versus charge pressure

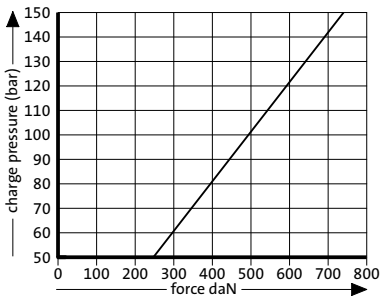


Spring force Diagram displacement versus stroke rise

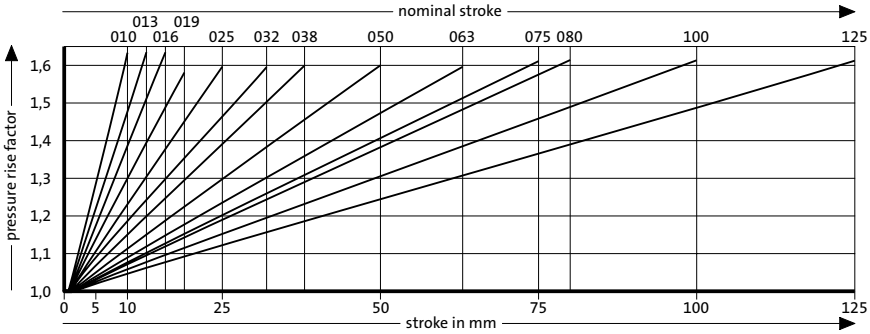


Pressure rise factor accounts for displacement but not external influences!

# GAS SPRING POWERLINE WITH REINFORCED SPRING BASE MOUNTING VARIATIONS

2480.007.00750

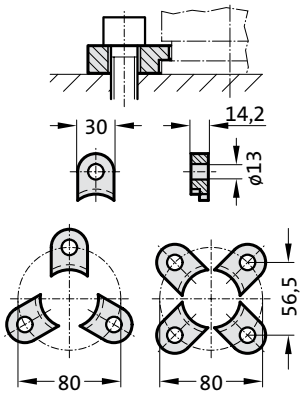


2480.008.00750 [3]

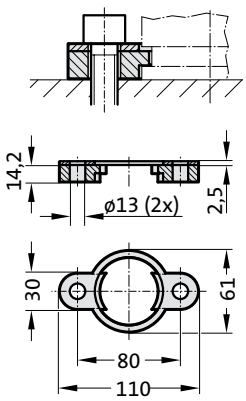


2480.010.00750.115 [3]
2480.010.00750.190* [3]

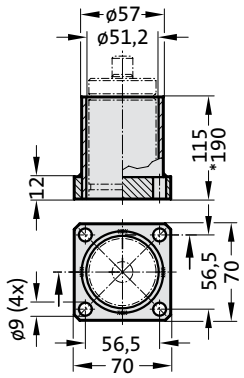


2480.011.00750

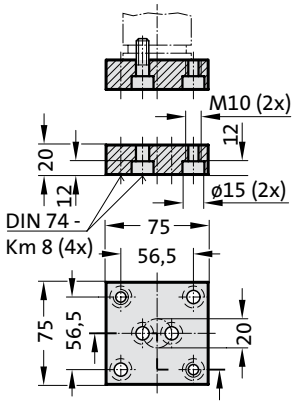


2480.011.00750.1

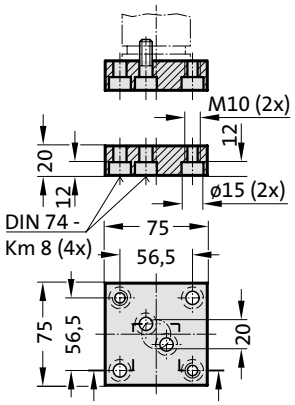


2480.011.00750.3

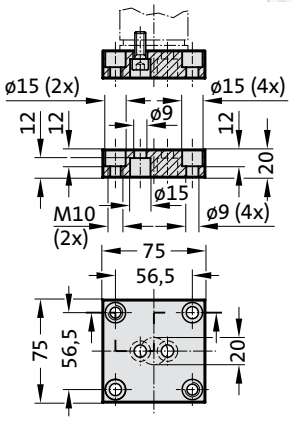


2480.022.00750

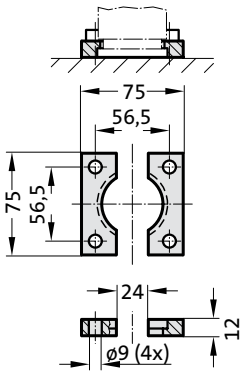


2480.044.00750 [2]

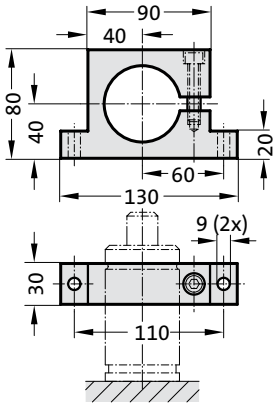


2480.044.03.00750 [2]

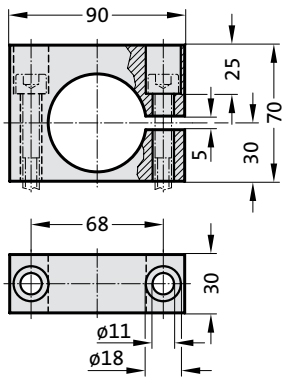


2480.045.00750 [2]

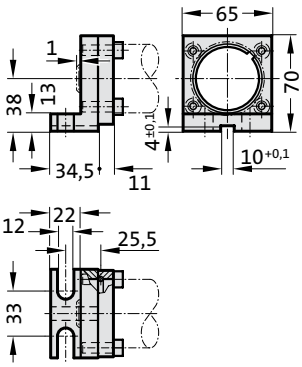


2480.047.00750 [2]

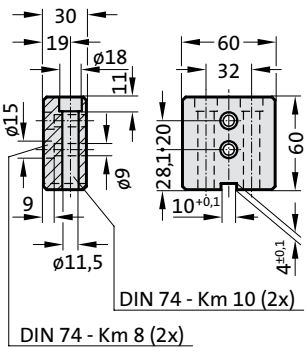


2480.055.00750

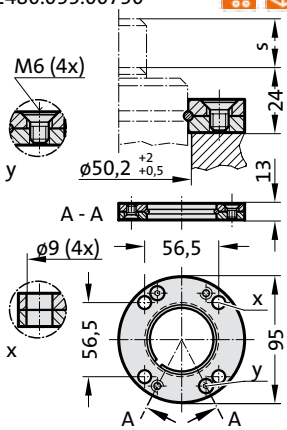


2480.057.00750

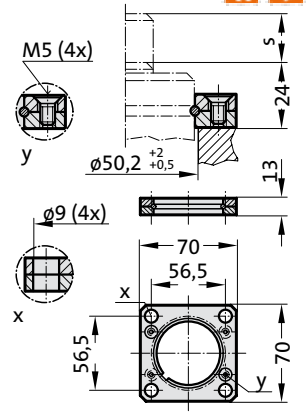


2480.064.00750 [4]

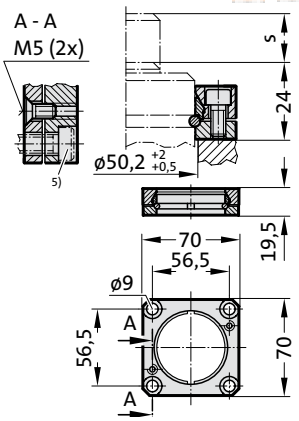


**Note:**

[2] Attention:
The spring force must be absorbed by the stop Surface!
[3] Not for use with composite connection.
[4] Square collar flange, non-rotating, fixing for composite connection.
[5] Machine screws with hexagonal socket (compact head recommended)

# GAS SPRING POWERLINE WITH REINFORCED SPRING BASE

**Note:**
Initial spring force at 150 bar = 920 daN

Order No for spare parts kit: 2487.12.01000

Pressure medium: Nitrogen $N_2$
Max. filling pressure: 150 bar
Min. filling pressure: 25 bar
Working temperature: 0°C to +80°C
Temperature related force increase: ± 0.3%/°C
Max. recommended extensions per minute:
approx. 20 to 100 (at 20°C)
Max. piston speed: 1.6 m/s

2487.12.33.01000.

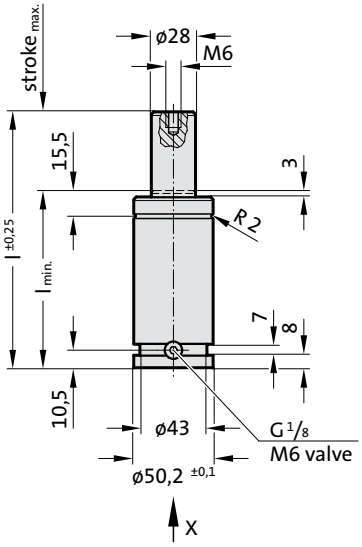

APPROVED PED 2014/68/EU

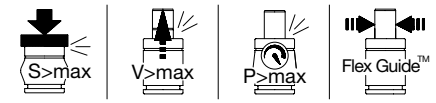


View X

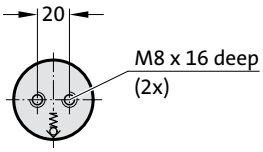


**2487.12.33.01000.**

**Gas spring POWERLINE with reinforced spring base**

| Order No | Stroke$_{max.}$ (s) | $l_{min.}$ | l |
|---|---|---|---|
| 2487.12.33.01000.013 | 13 | 65 | 78 |
| 2487.12.33.01000.016 | 16 | 68 | 84 |
| 2487.12.33.01000.019 | 19 | 71 | 90 |
| 2487.12.33.01000.025 | 25 | 77 | 102 |
| 2487.12.33.01000.032 | 32 | 84 | 116 |
| 2487.12.33.01000.038 | 38 | 90 | 128 |
| 2487.12.33.01000.050 | 50 | 102 | 152 |
| 2487.12.33.01000.063 | 63 | 115 | 178 |
| 2487.12.33.01000.075 | 75 | 127 | 202 |
| 2487.12.33.01000.080 | 80 | 132 | 212 |
| 2487.12.33.01000.100 | 100 | 152 | 252 |
| 2487.12.33.01000.125 | 125 | 177 | 302 |

Initial spring force
versus charge pressure

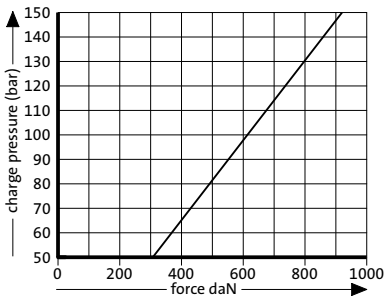


Spring force Diagram displacement versus stroke rise

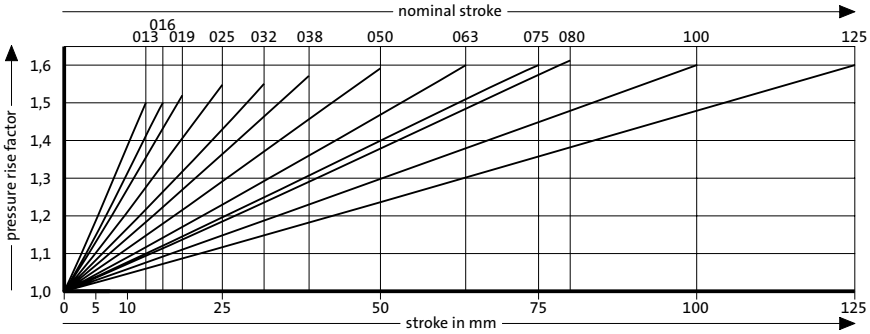


Pressure rise factor accounts for displacement but not external influences!

# GAS SPRING POWERLINE WITH REINFORCED SPRING BASE MOUNTING VARIATIONS

2480.007.01000

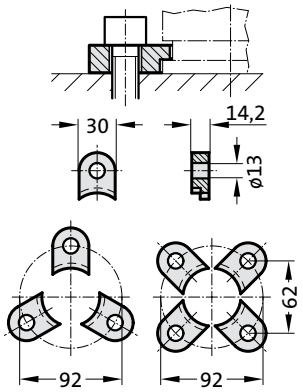


2480.011.01000

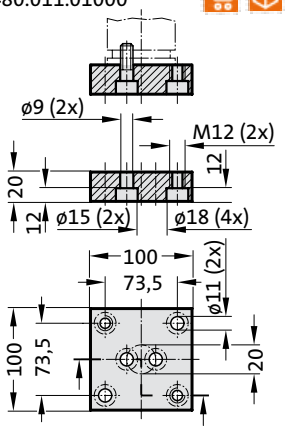


2480.011.01000.2

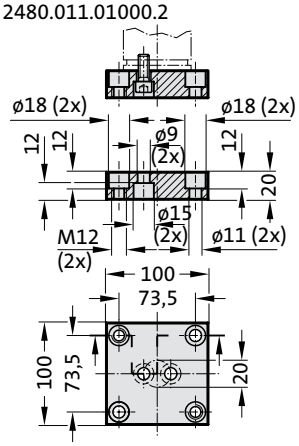


2480.022.01000

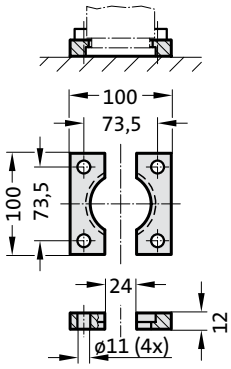


2480.044.03.01000 [2]

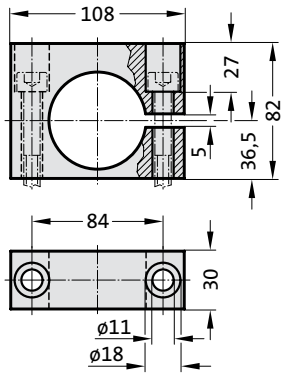


2480.057.01000

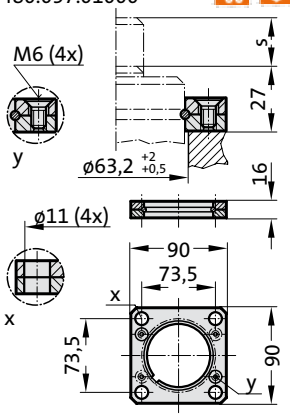


2480.057.03.01000

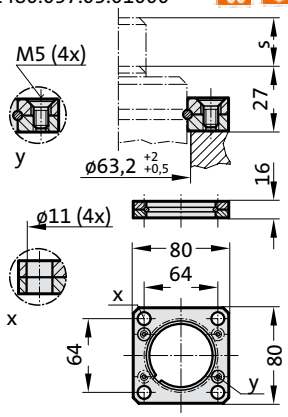


2480.064.01000 [4]

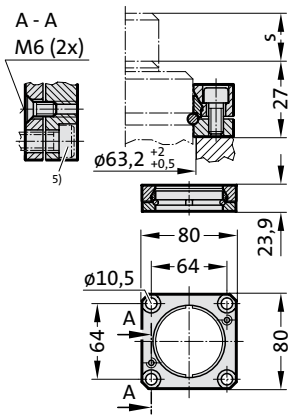


**Note:**

[2] Attention:
The spring force must be absorbed by the stop Surface!

[4] Square collar flange, non-rotating, fixing for composite connection.

[5] Machine screws with hexagonal socket (compact head recommended)

# GAS SPRING POWERLINE WITH REINFORCED SPRING BASE

**Note:**
Initial spring force at 150 bar = 1500 daN

Order No for spare parts kit: 2487.12.01500

Pressure medium: Nitrogen $N_2$
Max. filling pressure: 150 bar
Min. filling pressure: 25 bar
Working temperature: 0°C to +80°C
Temperature related force increase: ± 0.3%/°C
Max. recommended extensions per minute:
approx. 50 to 100 (at 20°C)
Max. piston speed: 1.6 m/s

2487.12.33.01500.

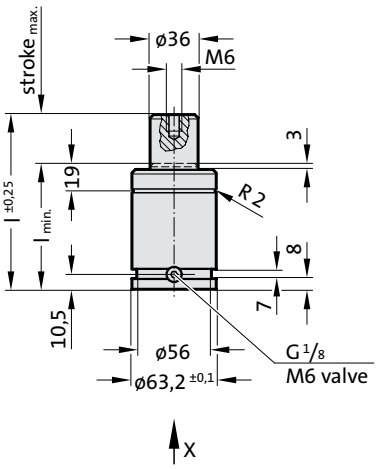

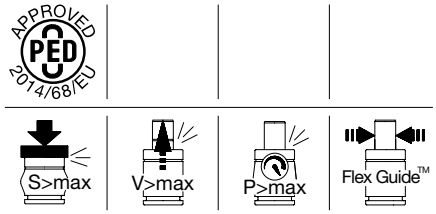


View X

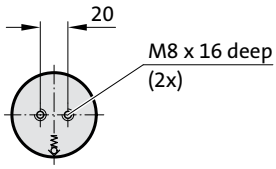


**2487.12.33.01500.**

**Gas spring POWERLINE with reinforced spring base**

| Order No | Stroke$_{max.}$ (s) | $l_{min.}$ | l |
|---|---|---|---|
| 2487.12.33.01500.013 | 13 | 65 | 78 |
| 2487.12.33.01500.016 | 16 | 68 | 84 |
| 2487.12.33.01500.019 | 19 | 71 | 90 |
| 2487.12.33.01500.025 | 25 | 77 | 102 |
| 2487.12.33.01500.032 | 32 | 84 | 116 |
| 2487.12.33.01500.038 | 38 | 90 | 128 |
| 2487.12.33.01500.050 | 50 | 102 | 152 |
| 2487.12.33.01500.063 | 63 | 115 | 178 |
| 2487.12.33.01500.075 | 75 | 127 | 202 |
| 2487.12.33.01500.080 | 80 | 132 | 212 |
| 2487.12.33.01500.100 | 100 | 152 | 252 |
| 2487.12.33.01500.125 | 125 | 177 | 302 |

Initial spring force
versus charge pressure

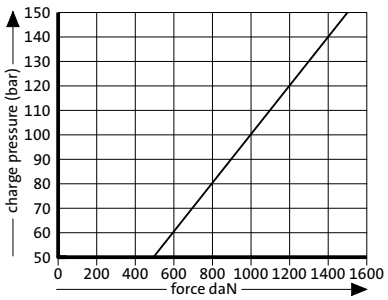


Spring force Diagram displacement versus stroke rise

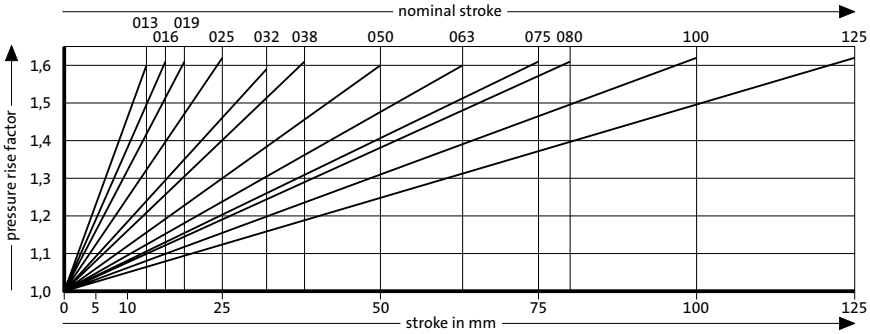


Pressure rise factor accounts for displacement but not external influences!

# GAS SPRING POWERLINE WITH REINFORCED SPRING BASE MOUNTING VARIATIONS

2480.007.01500

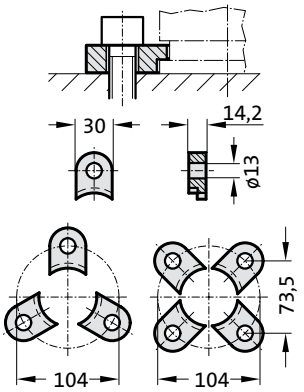


2480.008.01500 [3]

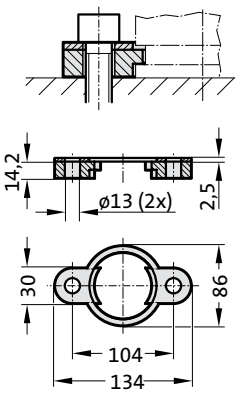


2480.010.01500.130 [3]
2480.010.01500.205* [3]

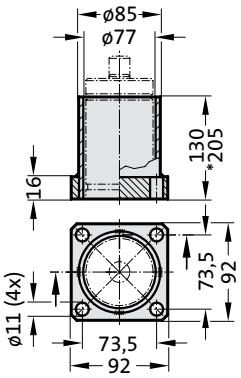


2480.011.01500

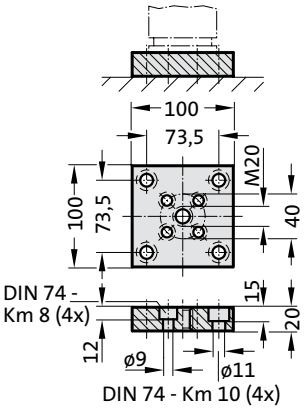


2480.011.01500.2

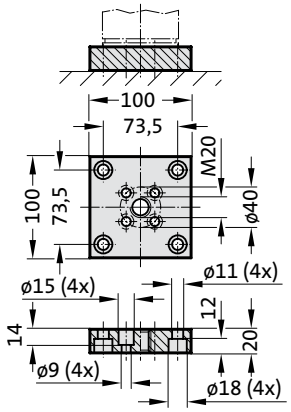


2480.022.01500

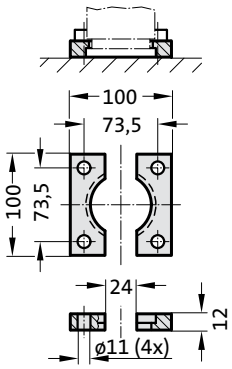


2480.044.01500 [2]

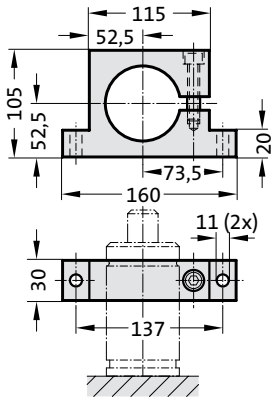


2480.044.03.01500 [2]

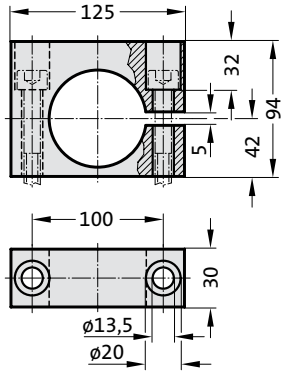


2480.045.01500 [2]

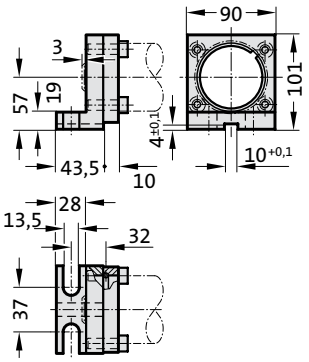


2480.047.01500 [2]

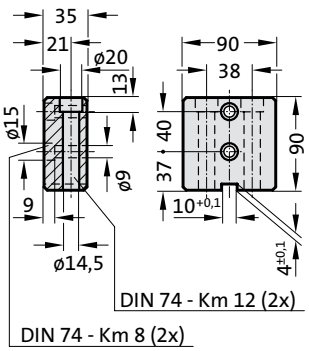


2480.055.01500

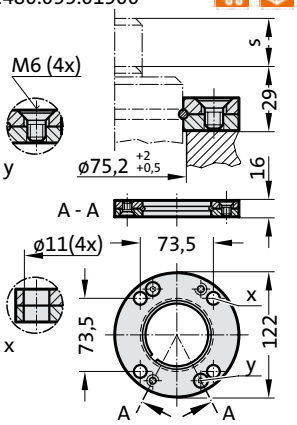


2480.057.01500

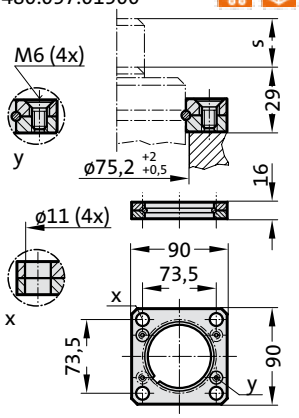


2480.064.01500 [4]

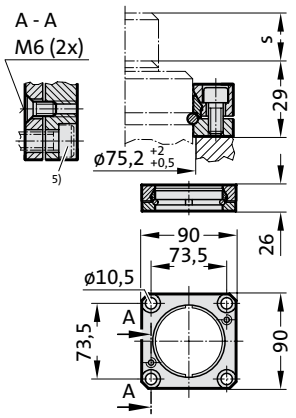


**Note:**

[2] Attention:
The spring force must be absorbed by the stop Surface!

[3] Not for use with composite connection.

[4] Square collar flange, non-rotating, fixing for composite connection.

[5] Machine screws with hexagonal socket (compact head recommended)

# GAS SPRING POWERLINE WITH REINFORCED SPRING BASE

**Note:**
Initial spring force at 150 bar = 2400 daN

Order No for spare parts kit: 2487.12.02400

Pressure medium: Nitrogen $N_2$
Max. filling pressure: 150 bar
Min. filling pressure: 25 bar
Working temperature: 0°C to +80°C
Temperature related force increase: ± 0.3%/°C
Max. recommended extensions per minute:
approx. 20 to 100 (at 20°C)
Max. piston speed: 1.6 m/s

2487.12.33.02400.

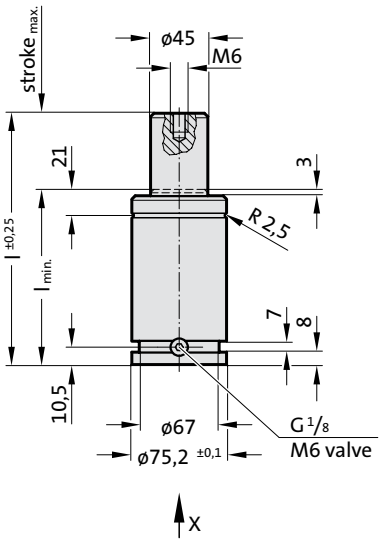

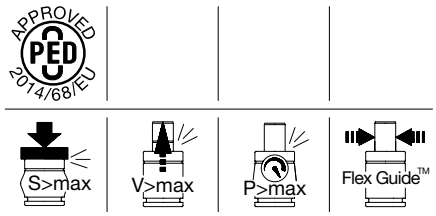


View X

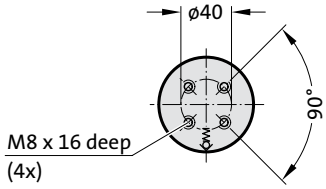


**2487.12.33.02400.**

**Gas spring POWERLINE with reinforced spring base**

| Order No | Stroke$_{max.}$ (s) | $l_{min.}$ | l |
|---|---|---|---|
| 2487.12.33.02400.016 | 16 | 75 | 91 |
| 2487.12.33.02400.019 | 19 | 79 | 98 |
| 2487.12.33.02400.025 | 25 | 84 | 109 |
| 2487.12.33.02400.032 | 32 | 91 | 123 |
| 2487.12.33.02400.038 | 38 | 97 | 135 |
| 2487.12.33.02400.050 | 50 | 109 | 159 |
| 2487.12.33.02400.063 | 63 | 122 | 185 |
| 2487.12.33.02400.075 | 75 | 134 | 209 |
| 2487.12.33.02400.080 | 80 | 139 | 219 |
| 2487.12.33.02400.100 | 100 | 159 | 259 |
| 2487.12.33.02400.125 | 125 | 184 | 309 |

Initial spring force
versus charge pressure

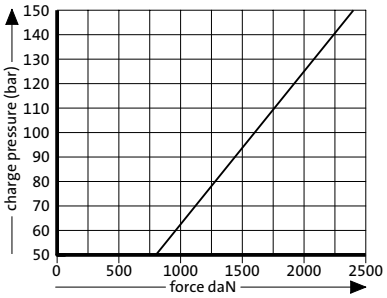


Spring force Diagram displacement versus stroke rise

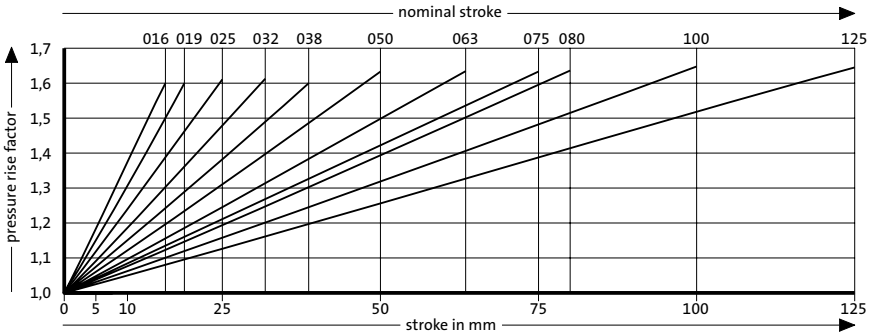


Pressure rise factor accounts for displacement but not external influences!

# GAS SPRING POWERLINE WITH REINFORCED SPRING BASE MOUNTING VARIATIONS

2480.007.03000

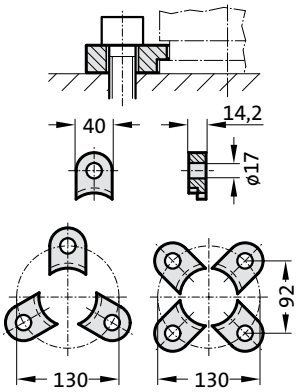


2480.008.03000 [3]

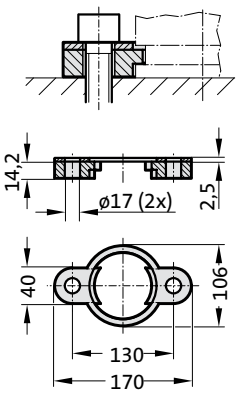


2480.010.03000.140 [3]
2480.010.03000.215* [3]

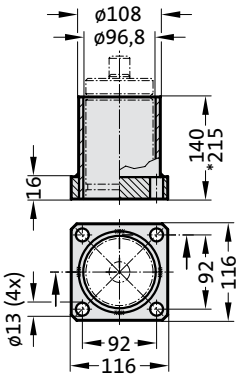


2480.011.03000

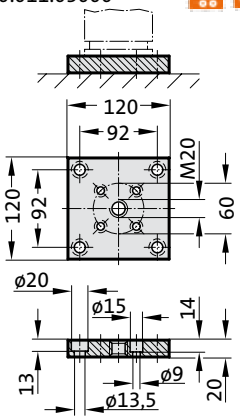


2480.011.03000.2

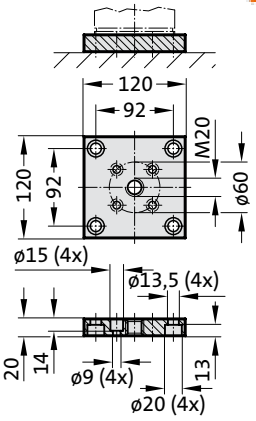


2480.022.03000

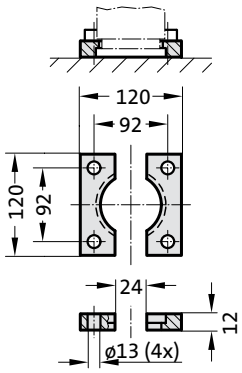


2480.044.03000 [2]

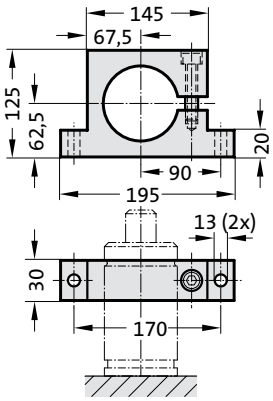


2480.044.03.03000 [2]

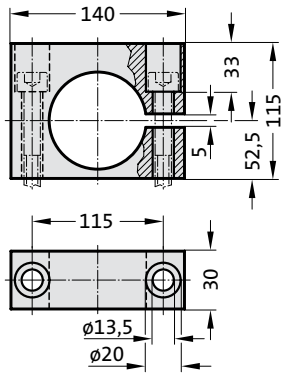


2480.045.03000 [2]

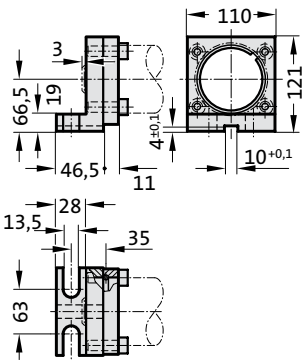


2480.047.03000 [2]

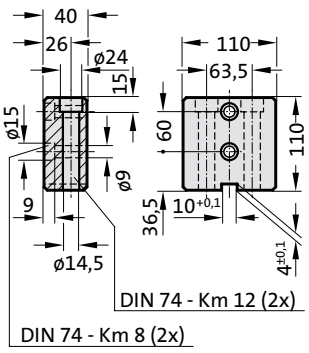


2480.055.03000

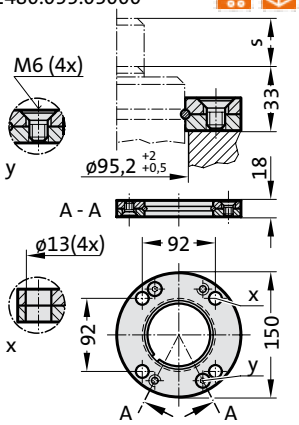


2480.057.03000

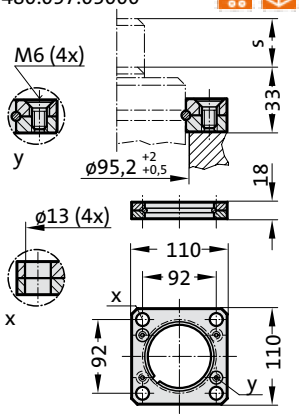


2480.064.03000 [4]

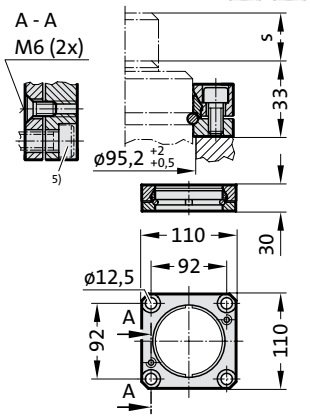


**Note:**

[2] Attention:
The spring force must be absorbed by the stop Surface!
[3] Not for use with composite connection.
[4] Square collar flange, non-rotating, fixing for composite connection.
[5] Machine screws with hexagonal socket (compact head recommended)

# GAS SPRING POWERLINE WITH REINFORCED SPRING BASE

**Note:**
Initial spring force at 150 bar = 4200 daN

Order No for spare parts kit: 2487.12.04200

Pressure medium: Nitrogen $N_2$
Max. filling pressure: 150 bar
Min. filling pressure: 25 bar
Working temperature: 0°C to +80°C
Temperature related force increase: ± 0.3%/°C
Max. recommended extensions per minute:
approx. 20 to 100 (at 20°C)
Max. piston speed: 1.6 m/s

2487.12.33.04200.

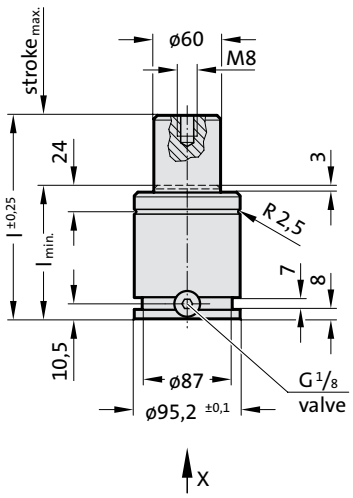

APPROVED PED 2014/68/EU

S>max | V>max | P>max | Flex Guide™

View X

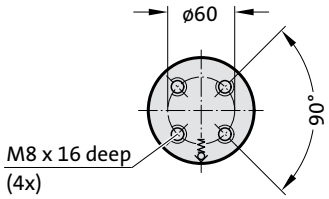


**2487.12.33.04200.**

**Gas spring POWERLINE with reinforced spring base**

| Order No | Stroke$_{max.}$ (s) | $l_{min.}$ | l |
|---|---|---|---|
| 2487.12.33.04200.016 | 16 | 78 | 94 |
| 2487.12.33.04200.019 | 19 | 81 | 100 |
| 2487.12.33.04200.025 | 25 | 87 | 112 |
| 2487.12.33.04200.032 | 32 | 94 | 126 |
| 2487.12.33.04200.038 | 38 | 100 | 138 |
| 2487.12.33.04200.050 | 50 | 112 | 162 |
| 2487.12.33.04200.063 | 63 | 125 | 188 |
| 2487.12.33.04200.075 | 75 | 137 | 212 |
| 2487.12.33.04200.080 | 80 | 142 | 222 |
| 2487.12.33.04200.100 | 100 | 162 | 262 |
| 2487.12.33.04200.125 | 125 | 187 | 312 |

Initial spring force
versus charge pressure

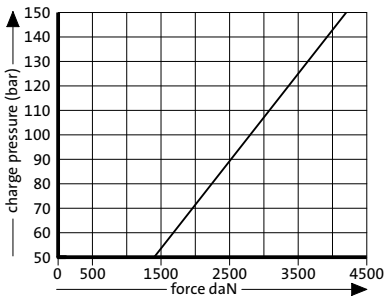


Spring force Diagram displacement versus stroke rise

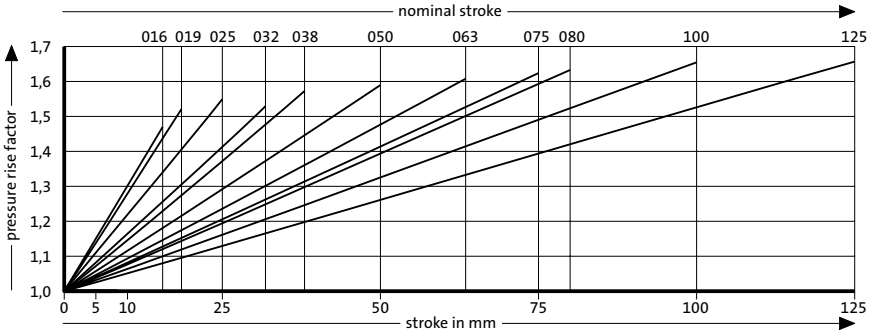


Pressure rise factor accounts for displacement but not external influences!

# GAS SPRING POWERLINE WITH REINFORCED SPRING BASE MOUNTING VARIATIONS

2480.007.05000

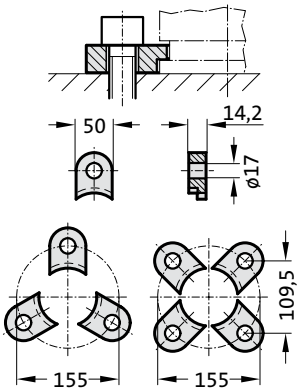


2480.008.05000 [3]

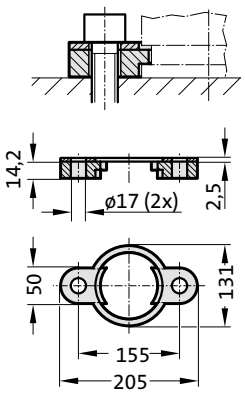


2480.010.05000.160 [3]

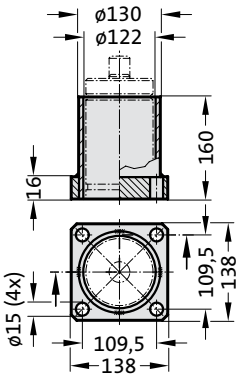


2480.011.05000

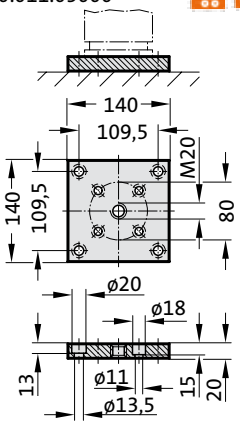


2480.011.05000.2

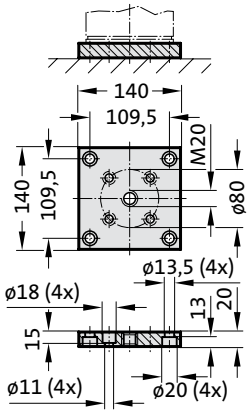


2480.022.05000

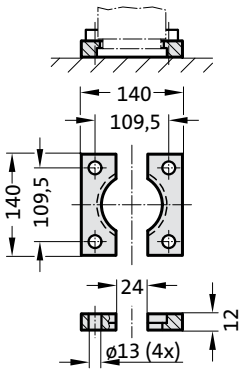


2480.044.05000 [2]

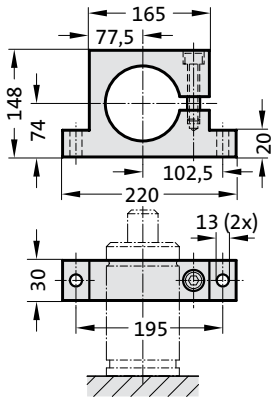


2480.044.03.05000 [2]

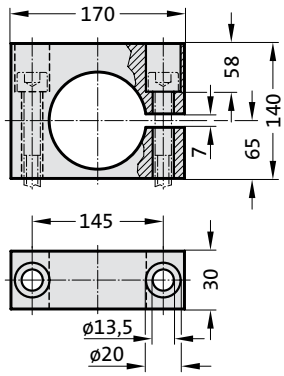


2480.045.05000 [2]

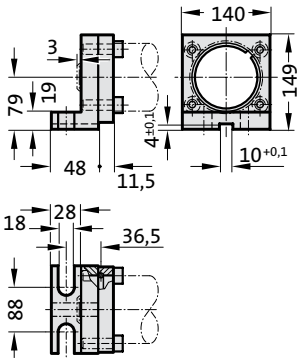


2480.047.05000 [2]

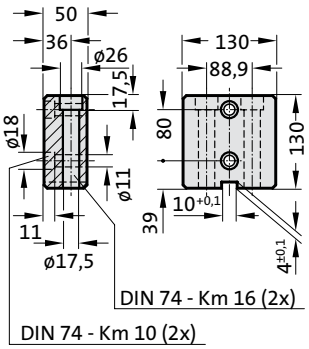


2480.055.05000

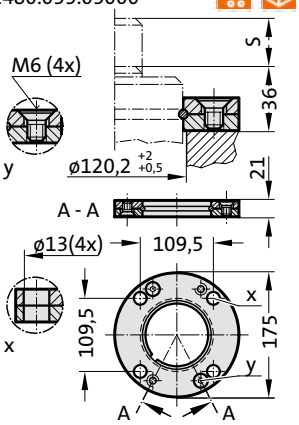


2480.057.05000

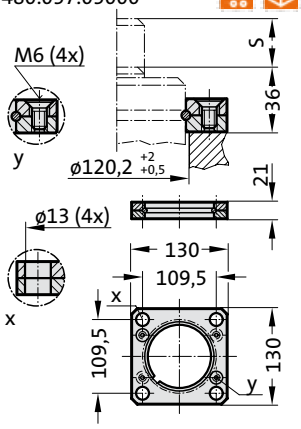


2480.064.05000 [4]

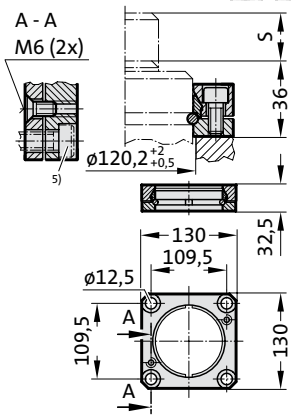


**Note:**

[2] Attention:
The spring force must be absorbed by the stop Surface!

[3] Not for use with composite connection.

[4] Square collar flange, non-rotating, fixing for composite connection.

[5] Machine screws with hexagonal socket (compact head recommended)

# GAS SPRING POWERLINE WITH REINFORCED SPRING BASE

**Note:**
Initial spring force at 150 bar = 6630 daN

Order No for spare parts kit: 2487.12.06600

Pressure medium: Nitrogen $N_2$
Max. filling pressure: 150 bar
Min. filling pressure: 25 bar
Working temperature: 0°C to +80°C
Temperature related force increase: ± 0.3%/°C
Max. recommended extensions per minute:
approx. 20 to 100 (at 20°C)
Max. piston speed: 1.6 m/s

2487.12.33.06600.

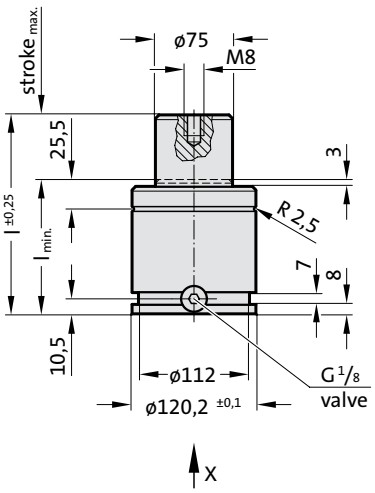

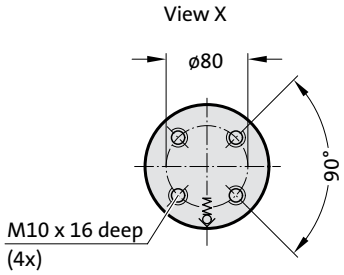


APPROVED PED 2014/68/EU

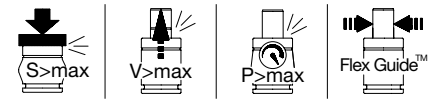


**2487.12.33.06600.**

**Gas spring POWERLINE with reinforced spring base**

| Order No | Stroke$_{max.}$ (s) | $l_{min.}$ | l |
|---|---|---|---|
| 2487.12.33.06600.016 | 16 | 88 | 104 |
| 2487.12.33.06600.019 | 19 | 91 | 110 |
| 2487.12.33.06600.025 | 25 | 97 | 122 |
| 2487.12.33.06600.032 | 32 | 104 | 136 |
| 2487.12.33.06600.038 | 38 | 110 | 148 |
| 2487.12.33.06600.050 | 50 | 122 | 172 |
| 2487.12.33.06600.063 | 63 | 135 | 198 |
| 2487.12.33.06600.075 | 75 | 147 | 222 |
| 2487.12.33.06600.080 | 80 | 152 | 232 |
| 2487.12.33.06600.100 | 100 | 172 | 272 |
| 2487.12.33.06600.125 | 125 | 197 | 322 |

Initial spring force
versus charge pressure

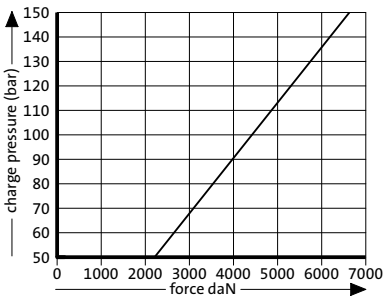


Spring force Diagram displacement versus stroke rise

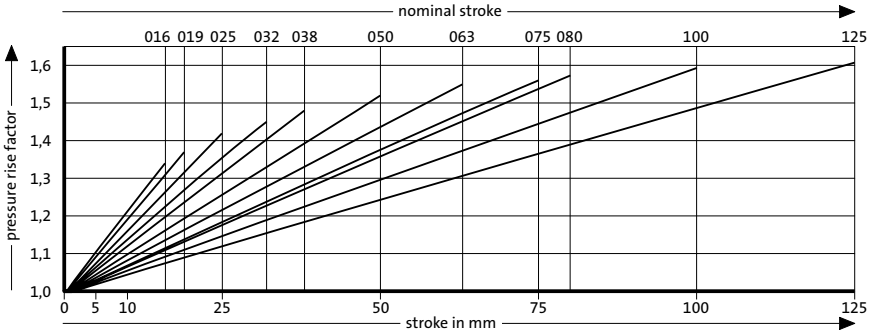


Pressure rise factor accounts for displacement but not external influences!

# GAS SPRINGS CX - COMPACT XTREME

# GAS SPRING CX, COMPACT XTREME
# MOUNTING VARIATIONS

2480.022.00150

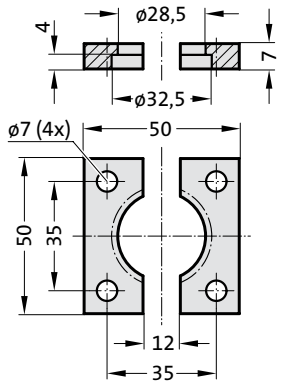


2480.044.03.00150[2)]

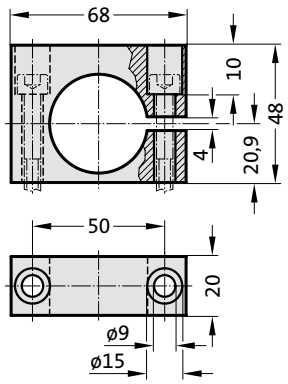


**Note:**

[2)] Attention:
The spring force must be absorbed by the stop Surface!

**Mounting examples:**

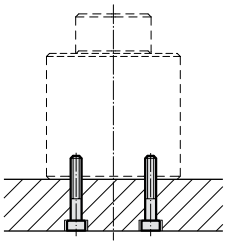

**see Note!**

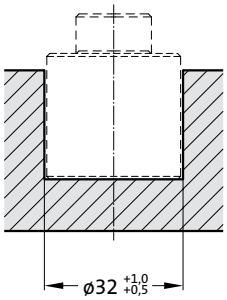


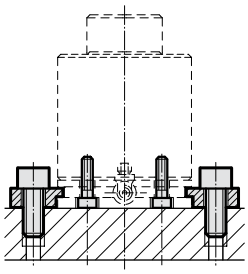

**with Adapter Baseplate**

# GAS SPRING CX, COMPACT XTREME

**Note:**
Initial spring force at 200 bar = 500 daN

Order No for spare parts kit: 2497.12.00500

For stroke lengths over 25 mm, the gas pressure springs in the tool should be attached to the base through the threaded holes.
When mounting to floor, contact over the entire floor of the cylinder tube must beensured!
Before fitting the adapter base plate remove the valve from the gas spring.
If vibration occurs, tighten the fixing screws accordingly.

Pressure medium: Nitrogen $N_2$
Max. filling pressure: 200 bar
Min. filling pressure: 25 bar
Working temperature: 0°C to +80°C
Temperature related force increase: ± 0.3%/°C
Max. recommended extensions per minute: approx. 70 to 200 (at 20°C)
Max. piston speed: 1.6 m/s

## 2497.12.00500.

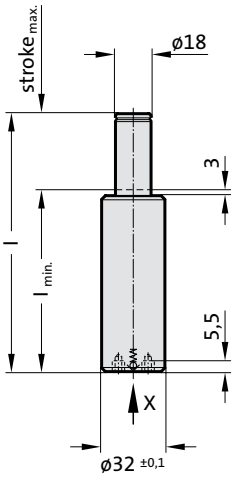


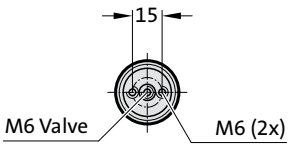


View X

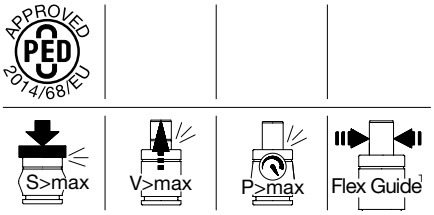


**2497.12.00500.**

**Gas spring CX, Compact Xtreme**

| Order No | Stroke max. (s) | l min. | l |
|---|---|---|---|
| 2497.12.00500.010 | 10 | 65 | 75 |
| 2497.12.00500.015 | 15 | 70 | 85 |
| 2497.12.00500.025 | 25 | 80 | 105 |
| 2497.12.00500.038 | 38 | 92 | 130 |
| 2497.12.00500.050 | 50 | 105 | 155 |
| 2497.12.00500.063 | 63 | 127 | 190 |
| 2497.12.00500.080 | 80 | 145 | 225 |

## 2497.00.20.00500

Adapter baseplate with connecting fitting, without valve (only for use with composite connections)

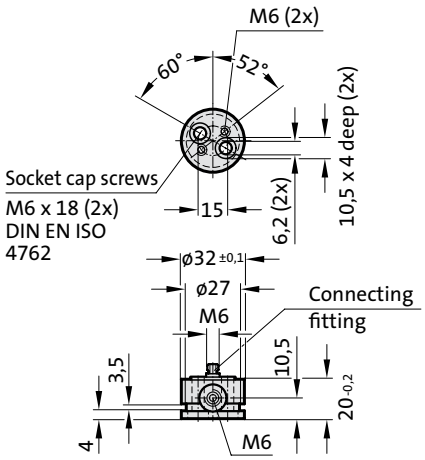


Initial spring force
versus charge pressure

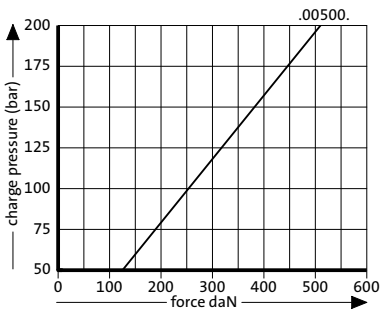


Spring force Diagram displacement versus stroke rise

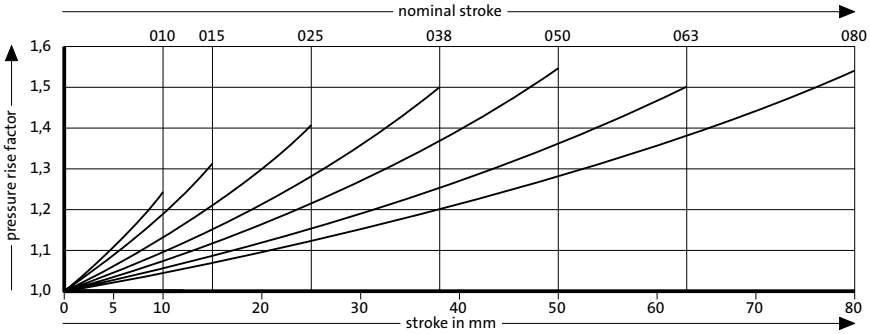


Pressure rise factor accounts for displacement but not external influences!

# GAS SPRING CX, COMPACT XTREME
# MOUNTING VARIATIONS

2480.022.00250

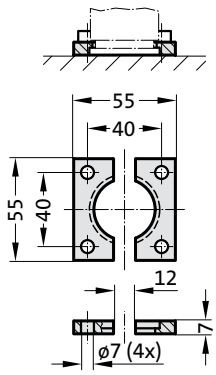


2480.044.00250 [2)]

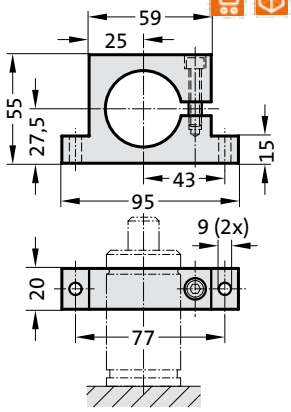


2480.044.03.00250 [2)]

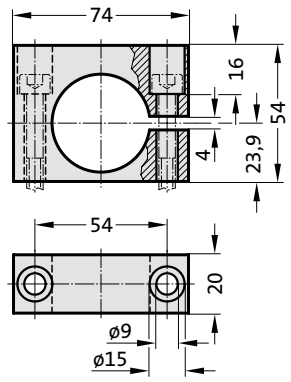


**Mounting example:**

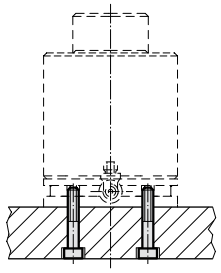

**with Adapter Baseplate**

**Note:**

[2)] Attention:
The spring force must be absorbed by the stop Surface!

**Mounting examples:**

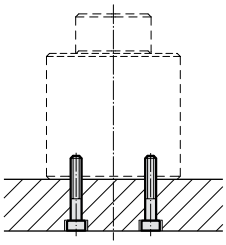

**see Note!**

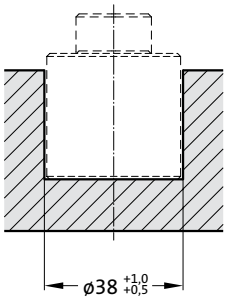


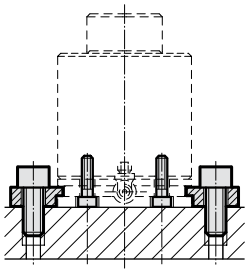

**with Adapter Baseplate**

# GAS SPRING CX, COMPACT XTREME

**Note:**
Initial spring force at 200 bar = 1000 daN

Order No for spare parts kit: 2497.12.01000

For stroke lengths over 25 mm, the gas pressure springs in the tool should be attached to the base through the threaded holes.
When mounting to floor, contact over the entire floor of the cylinder tube must beensured!
Before fitting the adapter base plate remove the valve from the gas spring.
If vibration occurs, tighten the fixing screws accordingly.

Pressure medium: Nitrogen $N_2$
Max. filling pressure: 200 bar
Min. filling pressure: 25 bar
Working temperature: 0°C to +80°C
Temperature related force increase: ± 0.3%/°C
Max. recommended extensions per minute: approx. 70 to 200 (at 20°C)
Max. piston speed: 1.6 m/s

## 2497.12.01000.

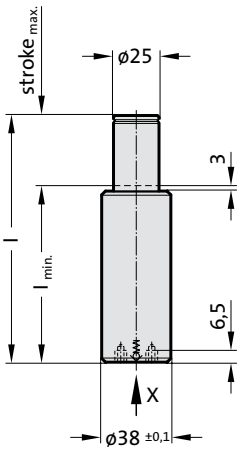

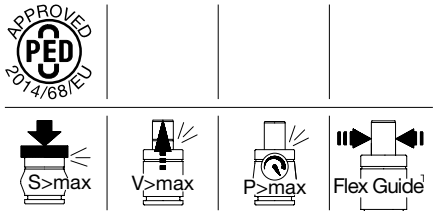


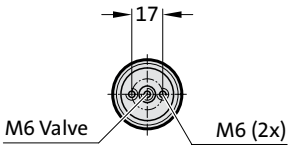


View X

**2497.12.01000.**

**Gas spring CX, Compact Xtreme**

| Order No | Stroke$_{max.}$ (s) | $l_{min.}$ | l |
|---|---|---|---|
| 2497.12.01000.010 | 10 | 65 | 75 |
| 2497.12.01000.015 | 15 | 70 | 85 |
| 2497.12.01000.025 | 25 | 80 | 105 |
| 2497.12.01000.038 | 38 | 97 | 135 |
| 2497.12.01000.050 | 50 | 110 | 160 |
| 2497.12.01000.063 | 63 | 142 | 205 |
| 2497.12.01000.080 | 80 | 160 | 240 |

## 2497.00.20.01000

Adapter baseplate with connecting fitting, with valve

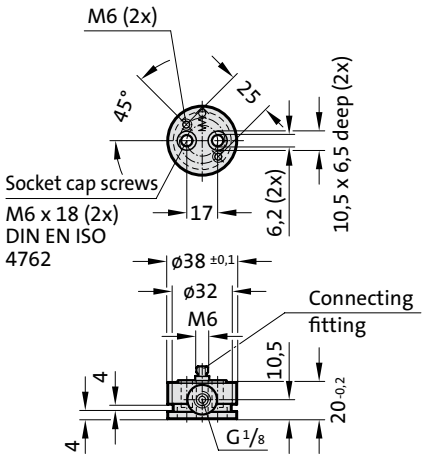


Initial spring force versus charge pressure

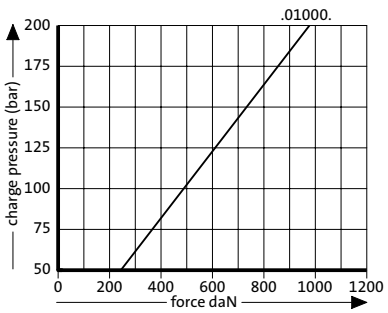


Spring force Diagram displacement versus stroke rise

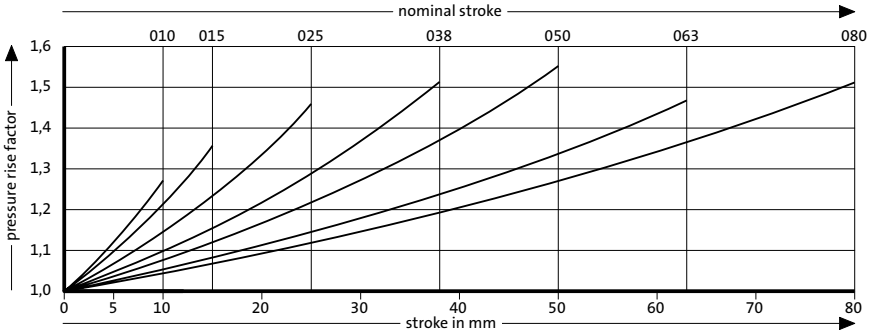


Pressure rise factor accounts for displacement but not external influences!

# GAS SPRING CX, COMPACT XTREME
# MOUNTING VARIATIONS

2480.022.00750

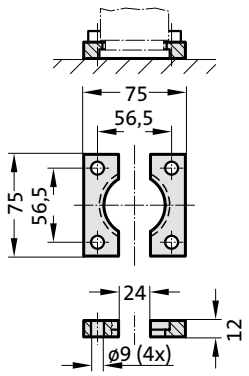


2480.044.00750 [2)]

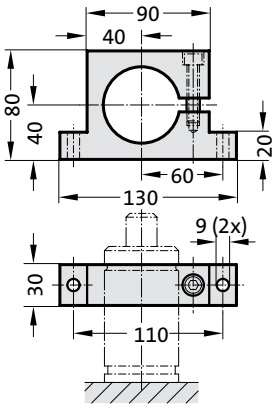


2480.044.03.00750 [2)]

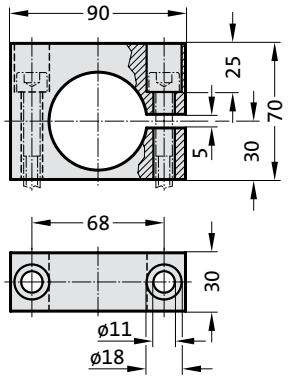


**Mounting example:**

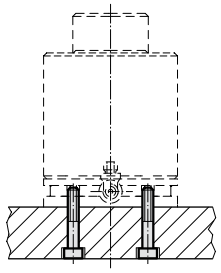

**with Adapter Baseplate**

**Note:**

[2)] Attention:
The spring force must be absorbed by the stop Surface!

**Mounting examples:**

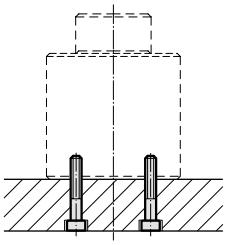

**see Note!**

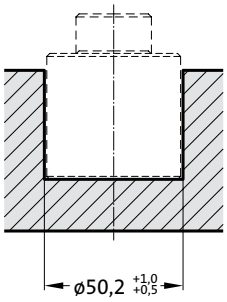


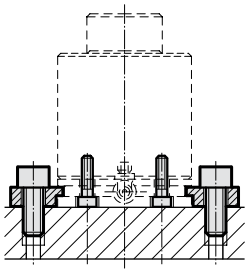

**with Adapter Baseplate**

# GAS SPRING CX, COMPACT XTREME

**Note:**
Initial spring force at 200 bar = 1900 daN

Order No for spare parts kit: 2497.12.01900

For stroke lengths over 25 mm, the gas pressure springs in the tool should be attached to the base through the threaded holes.
When mounting to floor, contact over the entire floor of the cylinder tube must beensured!
Before fitting the adapter base plate remove the valve from the gas spring.
If vibration occurs, tighten the fixing screws accordingly.

Pressure medium: Nitrogen $N_2$
Max. filling pressure: 200 bar
Min. filling pressure: 25 bar
Working temperature: 0°C to +80°C
Temperature related force increase: ± 0.3%/°C
Max. recommended extensions per minute: approx. 50 to 130 (at 20°C)
Max. piston speed: 1.6 m/s

## 2497.12.01900.

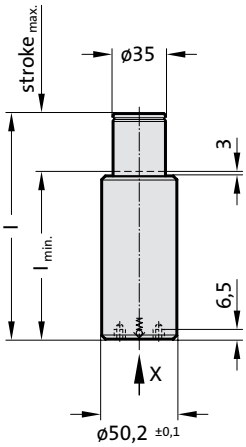

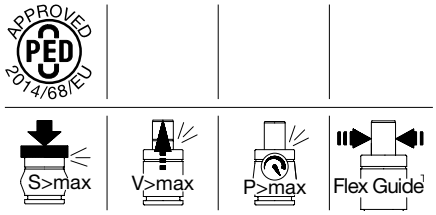


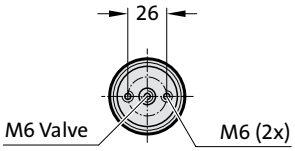


View X

**2497.12.01900.**

**Gas spring CX, Compact Xtreme**

| Order No | Stroke$_{max.}$ (s) | $l_{min.}$ | l |
|---|---|---|---|
| 2497.12.01900.010 | 10 | 70 | 80 |
| 2497.12.01900.015 | 15 | 80 | 95 |
| 2497.12.01900.025 | 25 | 90 | 115 |
| 2497.12.01900.038 | 38 | 112 | 150 |
| 2497.12.01900.050 | 50 | 125 | 175 |
| 2497.12.01900.063 | 63 | 142 | 205 |
| 2497.12.01900.080 | 80 | 165 | 245 |

## 2497.00.20.01900

Adapter baseplate with connecting fitting, with valve

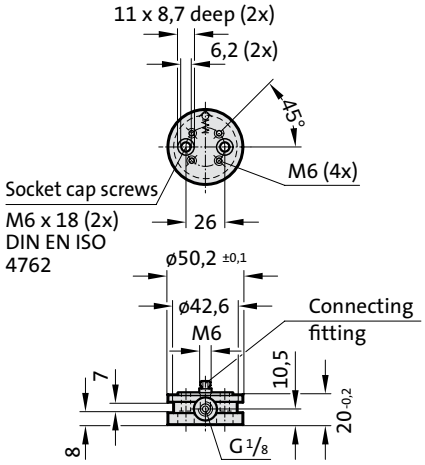


Initial spring force versus charge pressure

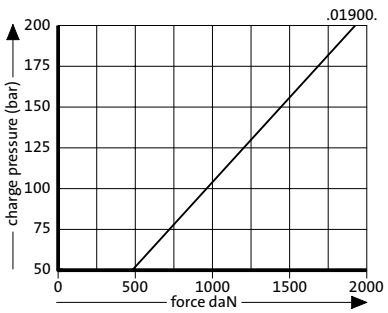


Spring force Diagram displacement versus stroke rise

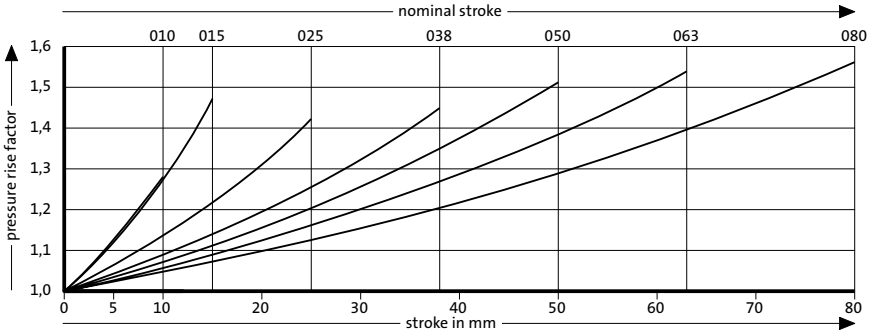


Pressure rise factor accounts for displacement but not external influences!

# GAS SPRINGS COMPACT
# FOR SMALL DISPLACEMENTS AND HIGH FORCES

# COMPACT GAS SPRING
# MOUNTING VARIATIONS

## 2480.051.00150

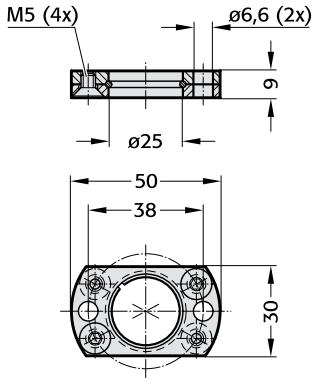


## 2480.053.00150

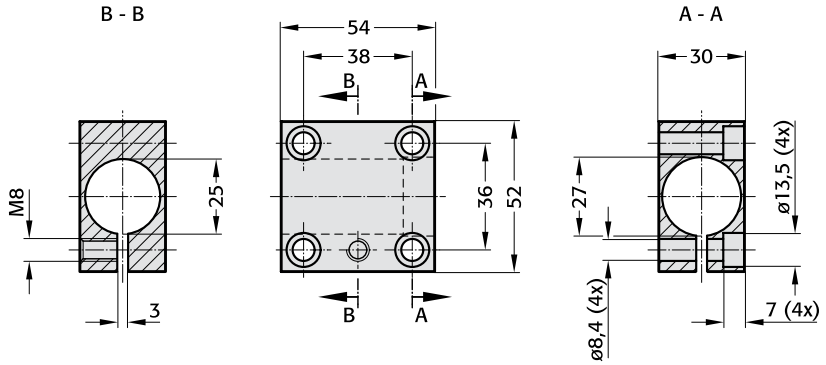


## 2480.054.00150

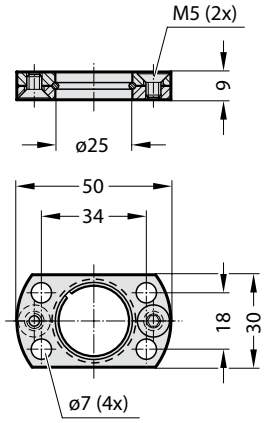


**Mounting examples:**

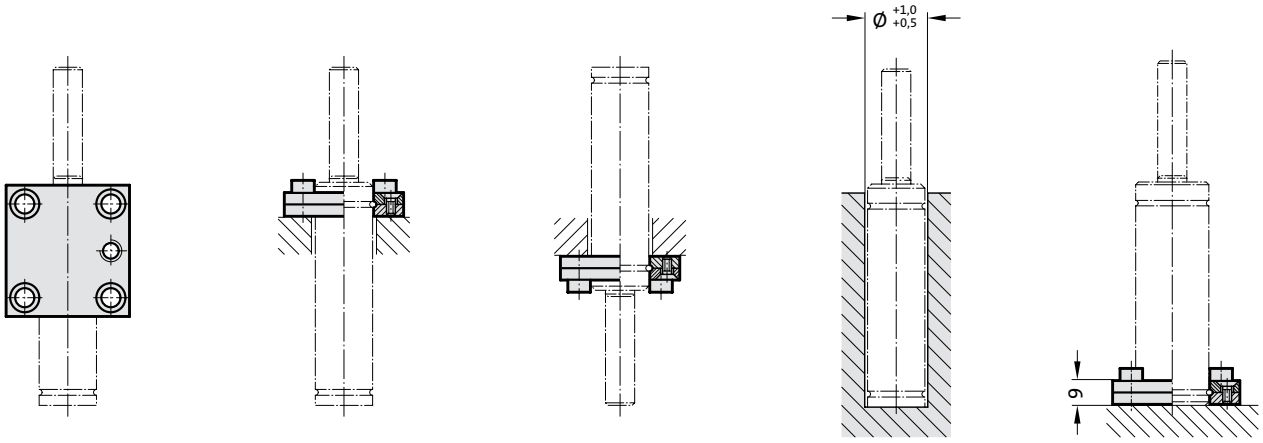

# COMPACT GAS SPRING

**Note:**
Initial spring force at 150 bar = 420 daN

Worn gas springs cannot be repaired, they have to be replaced completely.

Pressure medium: Nitrogen $N_2$
Max. filling pressure: 150 bar
Min. filling pressure: 25 bar
Working temperature: 0°C to +80°C
Temperature related force increase: ± 0.3%/°C
Max. recommended extensions per minute: approx. 50 to 100 (at 20°C)
Max. piston speed: 0.8 m/s

## 2490.14.00420.

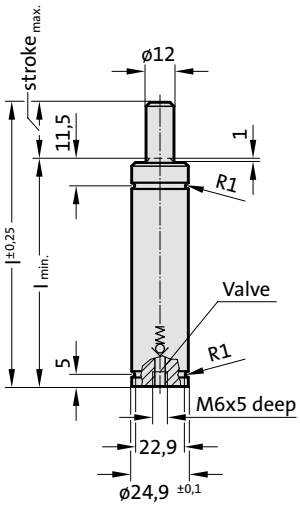

APPROVED PED 2014/68/EU

V>max

Flex Guide

**2490.14.00420.**

**Compact gas spring**

| Order No | $Stroke_{max.}$ (s) | $l_{min.}$ | l |
|---|---|---|---|
| 2490.14.00420.006 | 6 | 50 | 56 |
| 2490.14.00420.010 | 10 | 60 | 70 |
| 2490.14.00420.016 | 16 | 75 | 91 |
| 2490.14.00420.025 | 25 | 95 | 120 |
| 2490.14.00420.032 | 32 | 108 | 140 |
| 2490.14.00420.040 | 40 | 125 | 165 |
| 2490.14.00420.050 | 50 | 145 | 195 |

Initial spring force
versus charge pressure

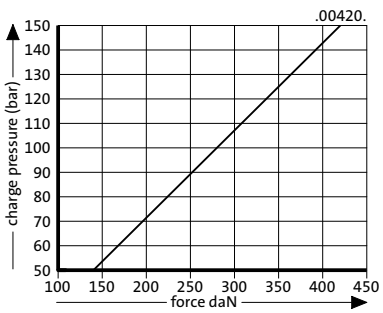


Spring force Diagram displacement versus stroke rise

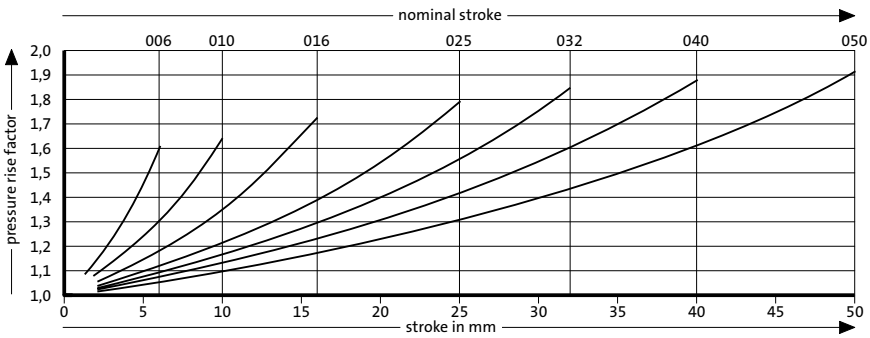


Pressure rise factor accounts for displacement but not external influences!

# COMPACT GAS SPRING
# MOUNTING VARIATIONS

2480.044.03.00150[2)]

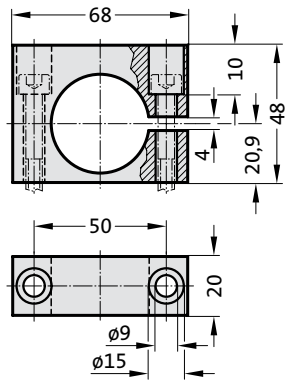


2480.055.00150

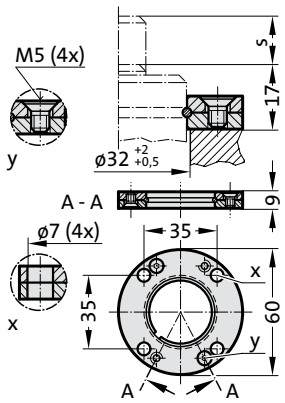


2480.057.00150

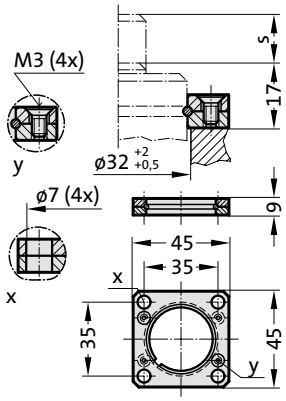


**Note:**

[2)] Attention:
The spring force must be absorbed by the stop Surface!

**Mounting examples:**

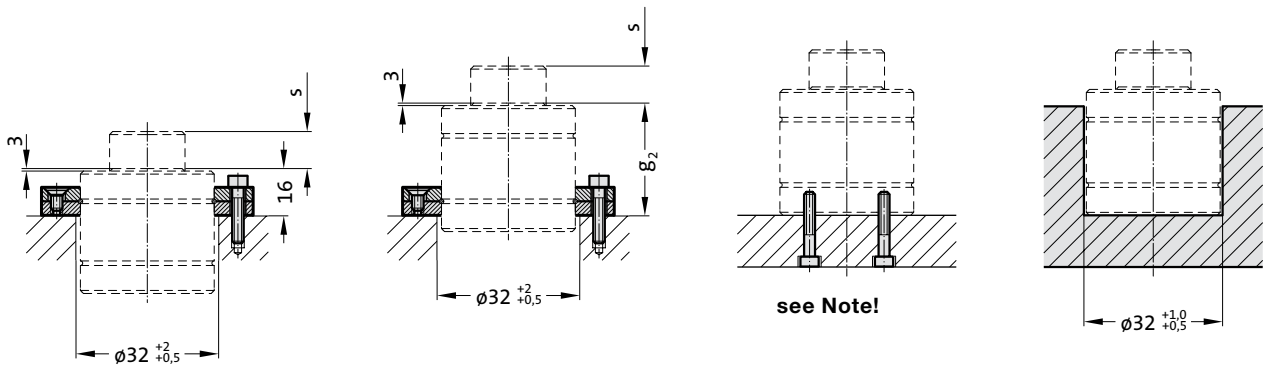

# COMPACT GAS SPRING

**Note:**
Initial spring force at 150 bar = 750 daN

Worn gas springs cannot be repaired, they have to be replaced completely.

When mounting to floor, contact over the entire floor of the cylinder tube must be ensured!

Pressure medium: Nitrogen $N_2$
Max. filling pressure: 150 bar
Min. filling pressure: 25 bar
Working temperature: 0°C to +80°C
Temperature related force increase: ± 0.3%/°C
Max. recommended extensions per minute: approx. 50 to 100 (at 20°C)
Max. piston speed: 0.8 m/s

## 2490.14.00750.

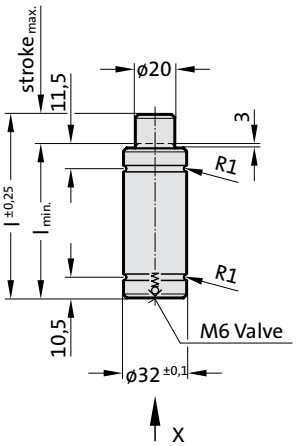


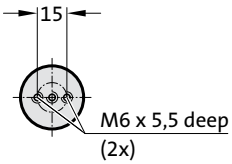


View X

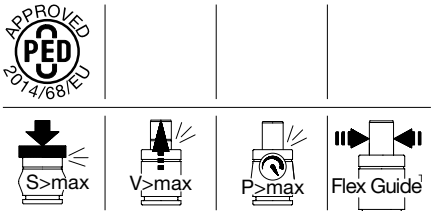


**2490.14.00750.**

**Compact gas spring**

| Order No | Stroke$_{max.}$ (s) | $l_{min.}$ | l | $g_2$* |
|---|---|---|---|---|
| 2490.14.00750.006 | 6 | 57 | 63 | 51 |
| 2490.14.00750.010 | 10 | 65 | 75 | 59 |
| 2490.14.00750.016 | 16 | 77 | 93 | 71 |
| 2490.14.00750.025 | 25 | 95 | 120 | 89 |
| 2490.14.00750.032 | 32 | 108 | 140 | 102 |
| 2490.14.00750.040 | 40 | 125 | 165 | 119 |
| 2490.14.00750.050 | 50 | 145 | 195 | 139 |

*see mounting example

Initial spring force
versus charge pressure

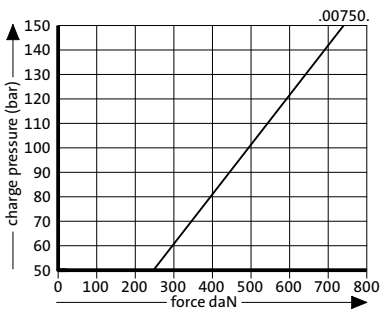


Spring force Diagram displacement versus stroke rise

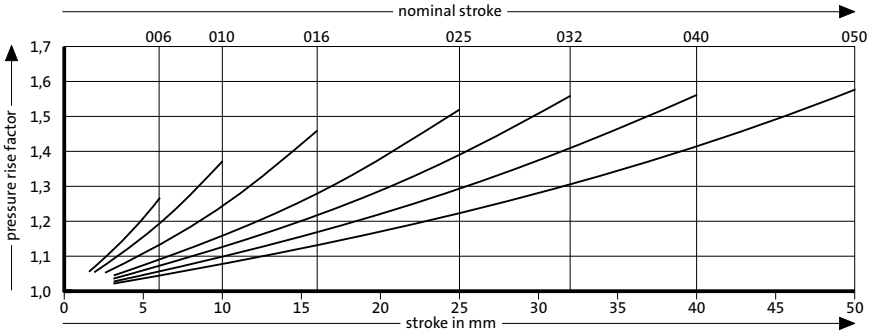


Pressure rise factor accounts for displacement but not external influences!

# COMPACT GAS SPRING
# MOUNTING VARIATIONS

2480.022.00250

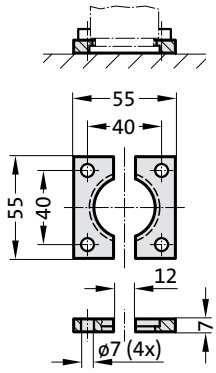


2480.044.00250 [2)]

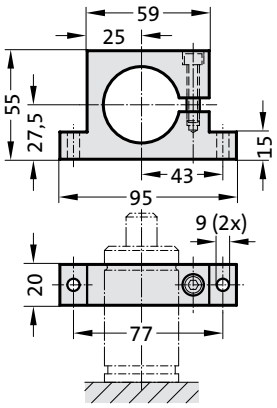


2480.044.03.00250 [2)]

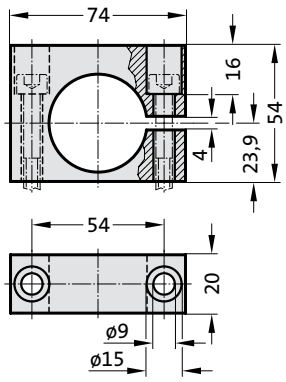


2480.052.01000

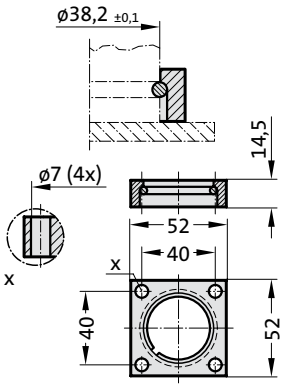


2480.055.00250

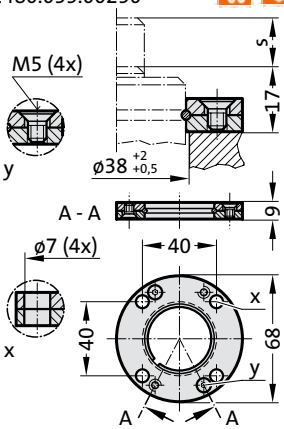


2480.057.00250

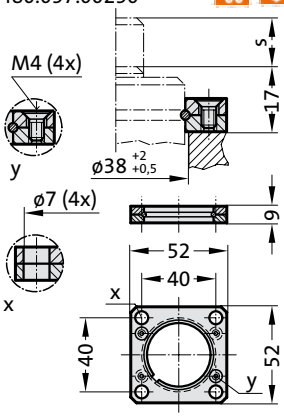


**Mounting example:**

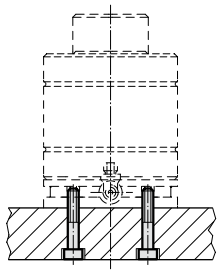

**with Adapter Baseplate**

**Note:**

[2)] Attention:
The spring force must be absorbed by the stop Surface!

**Mounting examples:**

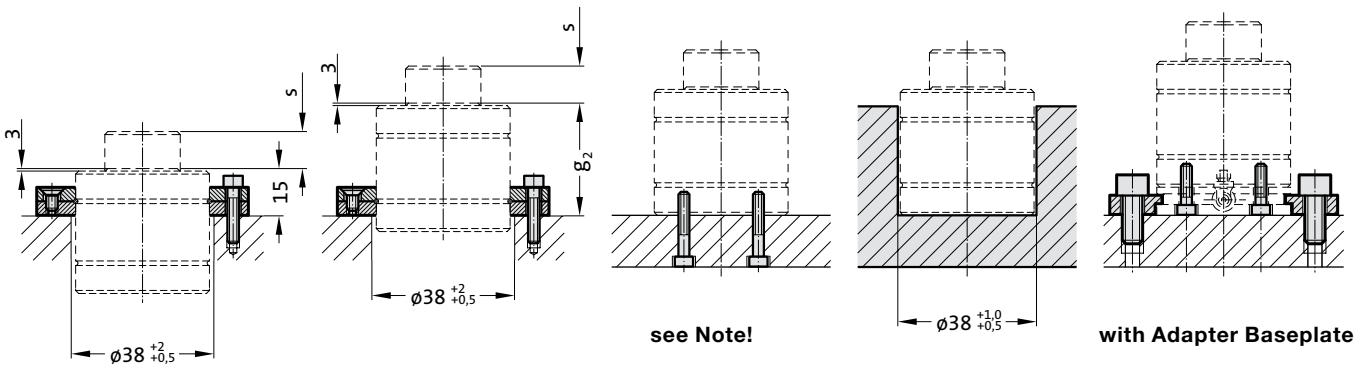

# COMPACT GAS SPRING

**Note:**
Initial spring force at 150 bar = 1000 daN

Order No for spare parts kit: 2490.14.01000

Gas spring without valve
Order No (example): 2490.14.01000. .P

When mounting to floor, contact over the entire floor of the cylinder tube must beensured!
Before fitting the adapter base plate remove the valve from the gas spring.
If vibration occurs, tighten the fixing screws accordingly.

Pressure medium: Nitrogen $N_2$
Max. filling pressure: 150 bar
Min. filling pressure: 25 bar
Working temperature: 0°C to +80°C
Temperature related force increase: ± 0.3%/°C
Max. recommended extensions per minute: approx. 100 (at 20°C)
Max. piston speed: 0.8 m/s

## 2490.14.01000.

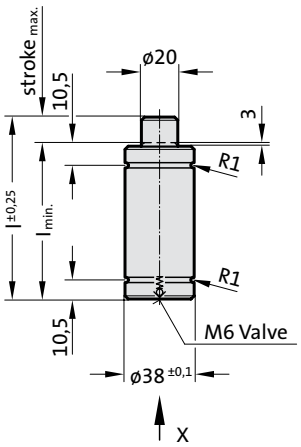


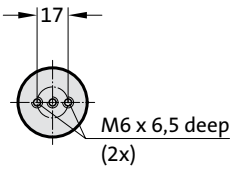


View X

APPROVED PED 2014/68/EU

S>max | V>max | P>max | Flex Guide

**2490.14.01000.**

**Compact gas spring**

| Order No | Stroke$_{max.}$ (s) | $l_{min.}$ | l | $g_2$* |
|---|---|---|---|---|
| 2490.14.01000.006 | 6 | 55 | 61 | 49 |
| 2490.14.01000.010 | 10 | 68 | 78 | 62 |
| 2490.14.01000.016 | 16 | 84 | 100 | 78 |
| 2490.14.01000.025 | 25 | 110 | 135 | 104 |
| 2490.14.01000.032 | 32 | 135 | 167 | 129 |
| 2490.14.01000.040 | 40 | 155 | 195 | 149 |
| 2490.14.01000.050 | 50 | 180 | 230 | 174 |

*see mounting example

## 2480.00.20.01000

Adapter baseplate with connecting fitting, without valve (only for use with composite connections)

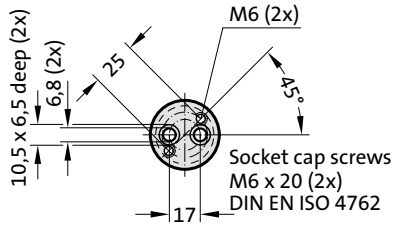


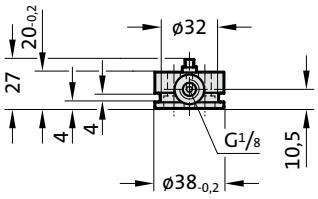


Initial spring force versus charge pressure

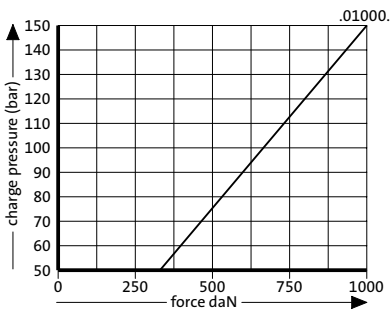


Spring force Diagram displacement versus stroke rise

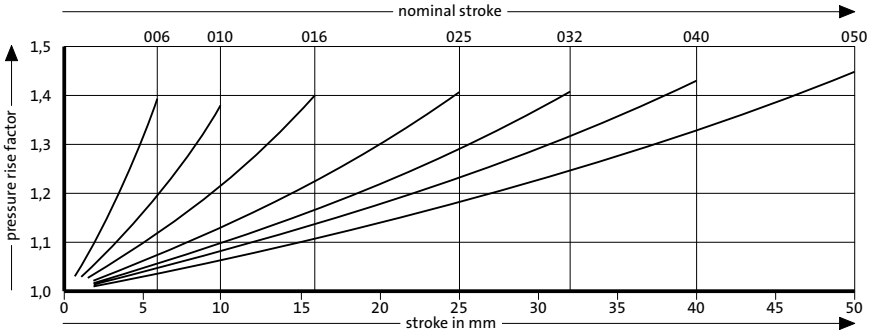


Pressure rise factor accounts for displacement but not external influences!

# COMPACT GAS SPRING
# MOUNTING VARIATIONS

2480.022.00750

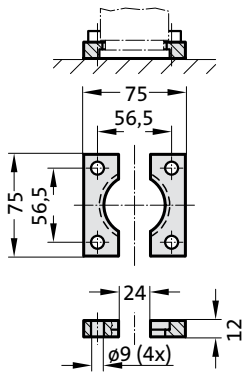


2480.044.00750 [2)]

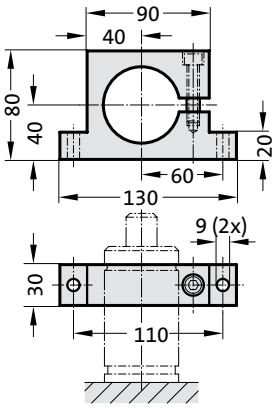


2480.044.03.00750 [2)]

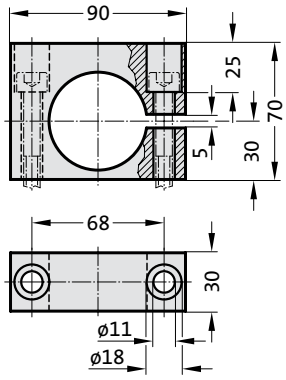


2480.052.1.01800

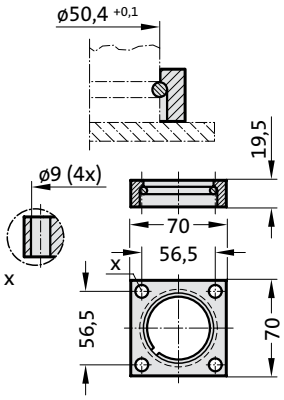


2480.058.00750

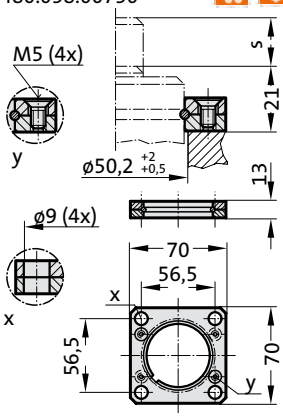


**Mounting example:**

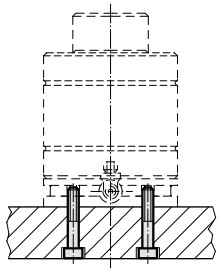

**with Adapter Baseplate**

**Note:**

[2)] Attention:
The spring force must be absorbed by the stop Surface!

**Mounting examples:**

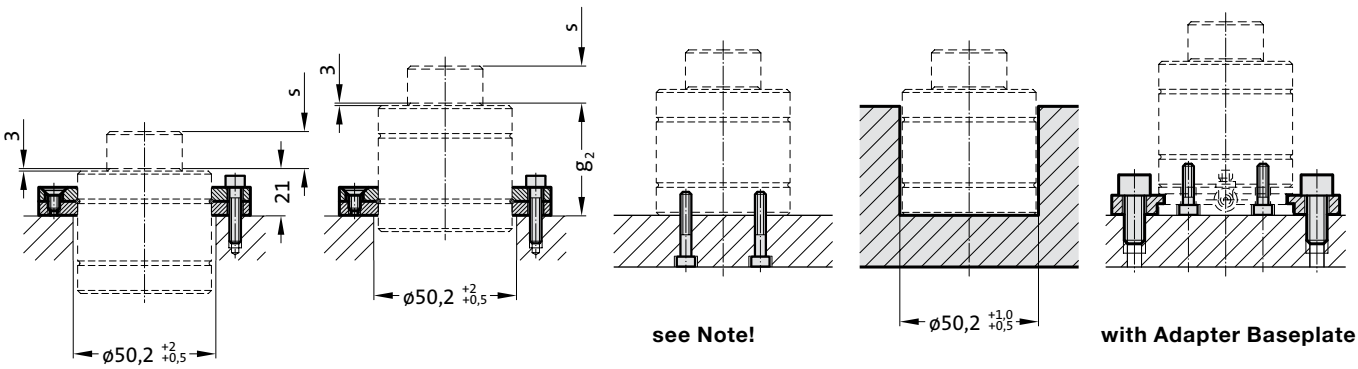

# COMPACT GAS SPRING

**Note:**
Initial spring force at 150 bar = 1800 daN

Order No for spare parts kit: 2490.14.01800

Gas spring without valve
Order No (example): 2490.14.01800. .P

When mounting to floor, contact over the entire floor of the cylinder tube must beensured!
Before fitting the adapter base plate remove the valve from the gas spring.
If vibration occurs, tighten the fixing screws accordingly.

Pressure medium: Nitrogen $N_2$
Max. filling pressure: 150 bar
Min. filling pressure: 25 bar
Working temperature: 0°C to +80°C
Temperature related force increase: ± 0.3%/°C
Max. recommended extensions per minute: approx. 50 to 100 (at 20°C)
Max. piston speed: 0.8 m/s

## 2490.14.01800.

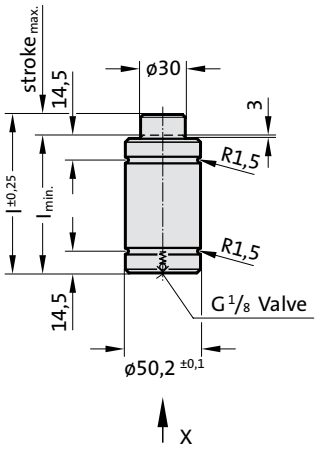

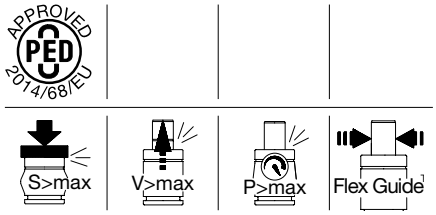


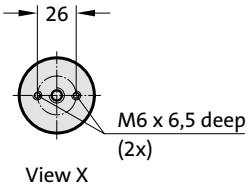


**2490.14.01800.**

**Compact gas spring**

| Order No | Stroke$_{max.}$ (s) | $l_{min.}$ | l | $g_2$* |
|---|---|---|---|---|
| 2490.14.01800.006 | 6 | 60 | 66 | 52 |
| 2490.14.01800.010 | 10 | 70 | 80 | 62 |
| 2490.14.01800.016 | 16 | 90 | 106 | 82 |
| 2490.14.01800.025 | 25 | 110 | 135 | 102 |
| 2490.14.01800.032 | 32 | 130 | 162 | 122 |
| 2490.14.01800.040 | 40 | 150 | 190 | 142 |
| 2490.14.01800.050 | 50 | 170 | 220 | 162 |
| 2490.14.01800.065 | 65 | 206 | 271 | 198 |

*see mounting example

## 2480.00.20.01800

Adapter baseplate with connecting fitting, without valve (only for use with composite connections)

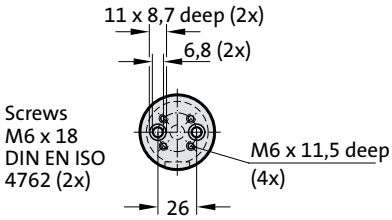


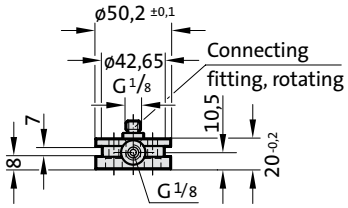


Initial spring force
versus charge pressure

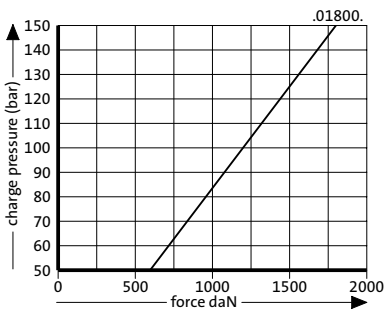


Spring force Diagram displacement versus stroke rise

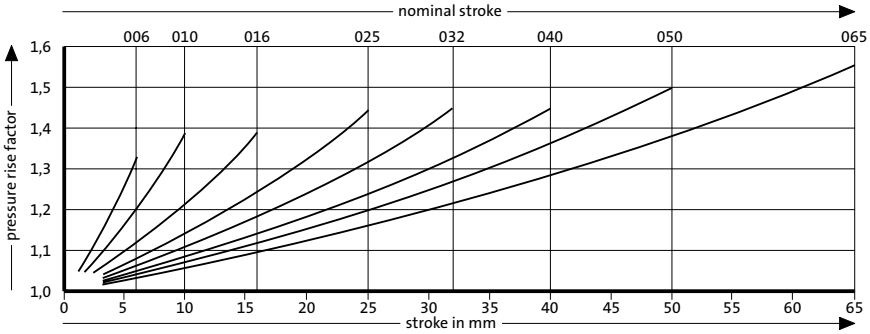


Pressure rise factor accounts for displacement but not external influences!

# COMPACT GAS SPRING
# MOUNTING VARIATIONS

2480.022.01000

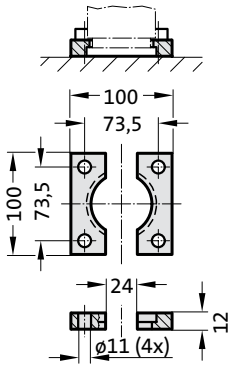


2480.044.03.01000 [2]

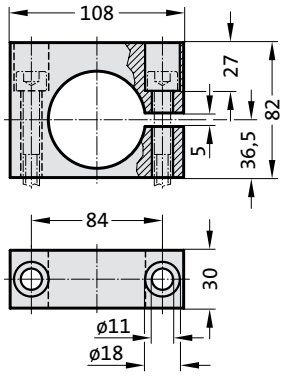


2480.057.01000

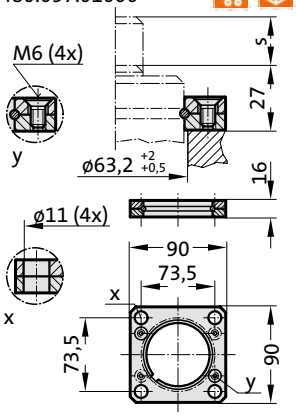


2480.057.03.01000

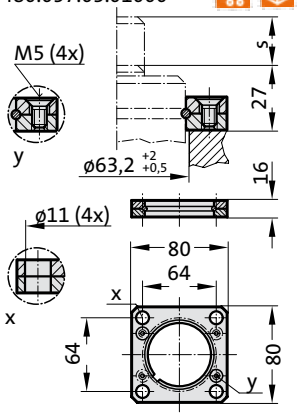


2480.064.01000 [4]

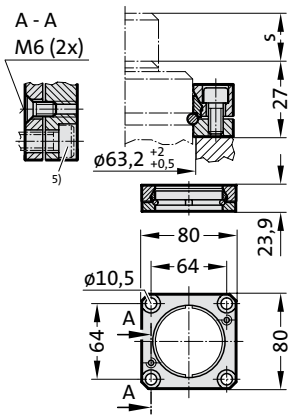


**Mounting example:**

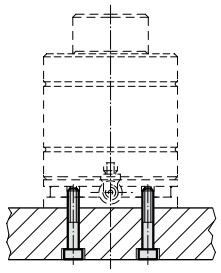

**with Adapter Baseplate**

**Note:**

[2] Attention:
The spring force must be absorbed by the stop Surface!

[4] Square collar flange, non-rotating, fixing for composite connection.

[5] Machine screws with hexagonal socket (compact head recommended)

**Mounting examples:**

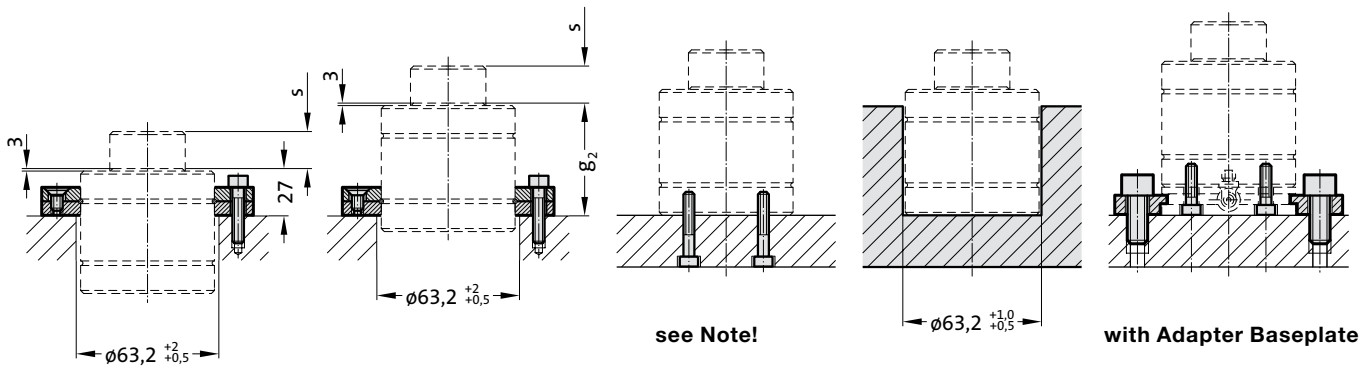

# COMPACT GAS SPRING

**Note:**
Initial spring force at 150 bar = 3000 daN

Order No for spare parts kit: 2490.14.03000

Gas spring without valve
Order No (example): 2490.14.03000. .P

When mounting to floor, contact over the entire floor of the cylinder tube must beensured!
Before fitting the adapter base plate remove the valve from the gas spring.
If vibration occurs, tighten the fixing screws accordingly.

Pressure medium: Nitrogen $N_2$
Max. filling pressure: 150 bar
Min. filling pressure: 25 bar
Working temperature: 0°C to +80°C
Temperature related force increase: ± 0.3%/°C
Max. recommended extensions per minute: approx. 80 to 100 (at 20°C)
Max. piston speed: 0.8 m/s

## 2490.14.03000.

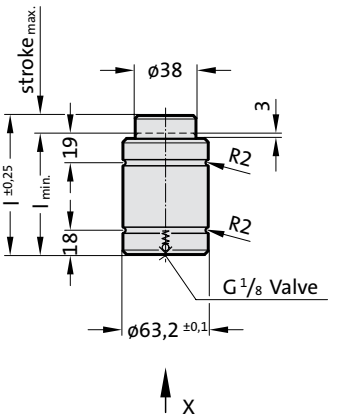

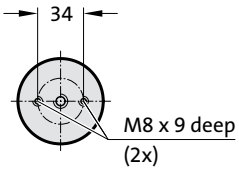


View X

APPROVED PED 2014/68/EU

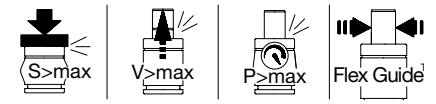


**2490.14.03000.**

**Compact gas spring**

| Order No | Stroke$_{max.}$ (s) | $l_{min.}$ | l | $g_2$* |
|---|---|---|---|---|
| 2490.14.03000.010 | 10 | 75 | 85 | 65 |
| 2490.14.03000.016 | 16 | 87 | 103 | 77 |
| 2490.14.03000.025 | 25 | 105 | 130 | 95 |
| 2490.14.03000.032 | 32 | 118 | 150 | 108 |
| 2490.14.03000.040 | 40 | 135 | 175 | 125 |
| 2490.14.03000.050 | 50 | 155 | 205 | 145 |
| 2490.14.03000.065 | 65 | 191 | 256 | 181 |

*see mounting example

## 2480.00.20.03000

Adapter baseplate with connecting fitting, without valve (only for use with composite connections)

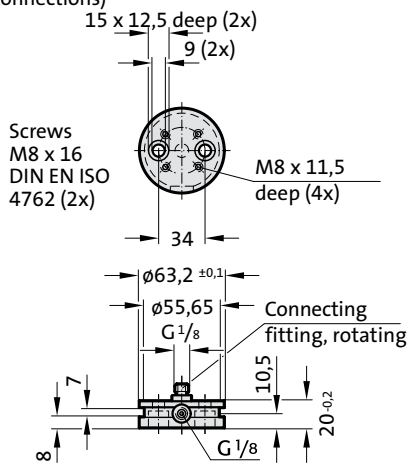


Initial spring force versus charge pressure

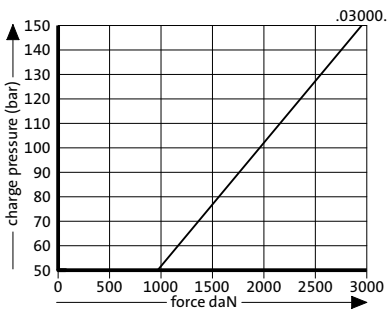


Spring force Diagram displacement versus stroke rise

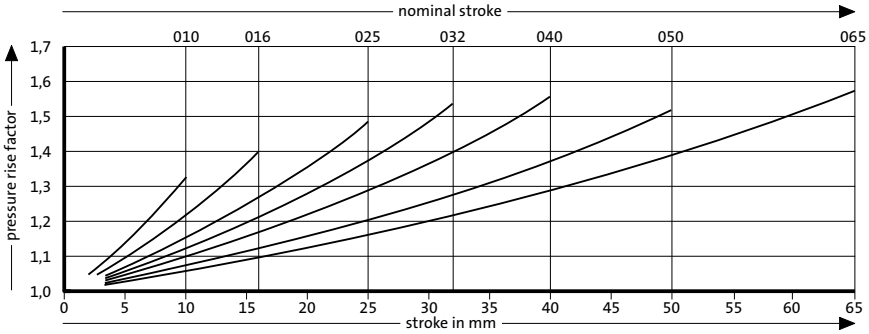


Pressure rise factor accounts for displacement but not external influences!

# COMPACT GAS SPRING
# MOUNTING VARIATIONS

2480.022.01500

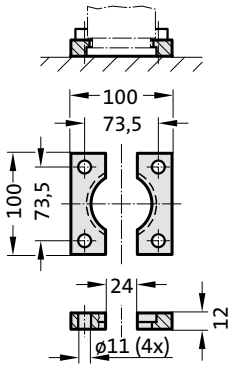


2480.044.01500 [2)]

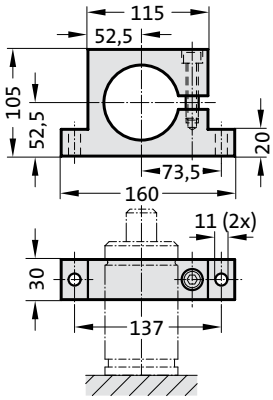


2480.044.03.01500 [2)]

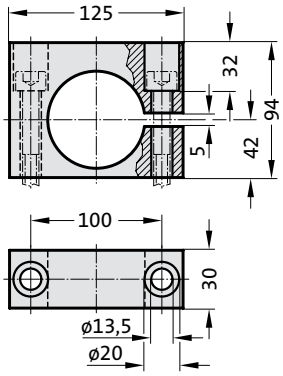


2480.052.04700

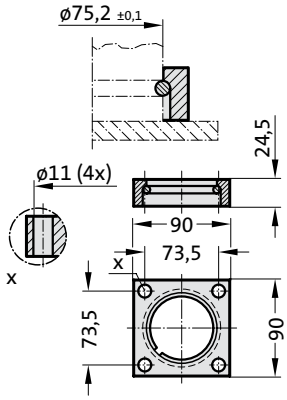


2480.058.01500

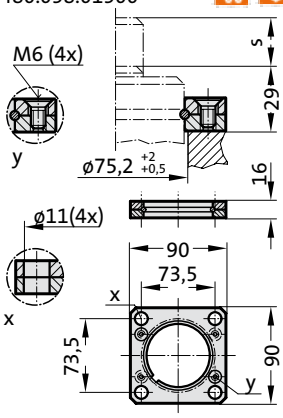


**Mounting example:**

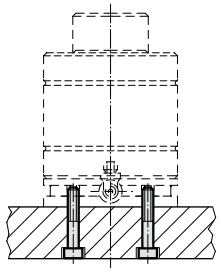

**with Adapter Baseplate**

**Note:**

[2)] Attention:
The spring force must be absorbed by the stop Surface!

**Mounting examples:**

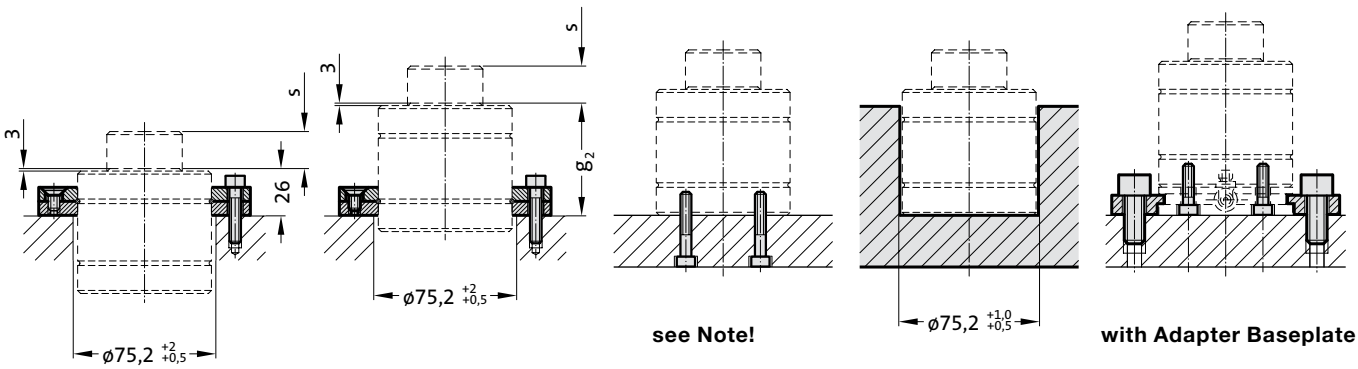

# COMPACT GAS SPRING

**Note:**
Initial spring force at 150 bar = 4700 daN

Order No for spare parts kit: 2490.14.04700

Gas spring without valve
Order No (example): 2490.14.04700. .P

When mounting to floor, contact over the entire floor of the cylinder tube must beensured!
Before fitting the adapter base plate remove the valve from the gas spring.
If vibration occurs, tighten the fixing screws accordingly.

Pressure medium: Nitrogen $N_2$
Max. filling pressure: 150 bar
Min. filling pressure: 25 bar
Working temperature: 0°C to +80°C
Temperature related force increase: ± 0.3%/°C
Max. recommended extensions per minute: approx. 80 to 100 (at 20°C)
Max. piston speed: 0.8 m/s

## 2490.14.04700.

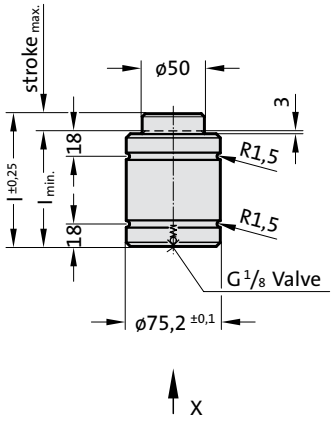

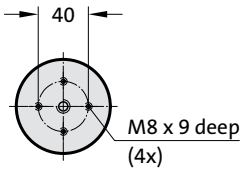


View X

**2490.14.04700.**

**Compact gas spring**

| Order No | Stroke$_{max.}$ (s) | $l_{min.}$ | l | $g_2$* |
|---|---|---|---|---|
| 2490.14.04700.010 | 10 | 70 | 80 | 60 |
| 2490.14.04700.016 | 16 | 90 | 106 | 80 |
| 2490.14.04700.025 | 25 | 110 | 135 | 100 |
| 2490.14.04700.032 | 32 | 135 | 167 | 125 |
| 2490.14.04700.040 | 40 | 160 | 200 | 150 |
| 2490.14.04700.050 | 50 | 190 | 240 | 180 |
| 2490.14.04700.065 | 65 | 208 | 273 | 198 |

*see mounting example

## 2480.00.20.04700

Adapter baseplate with connecting Fitting

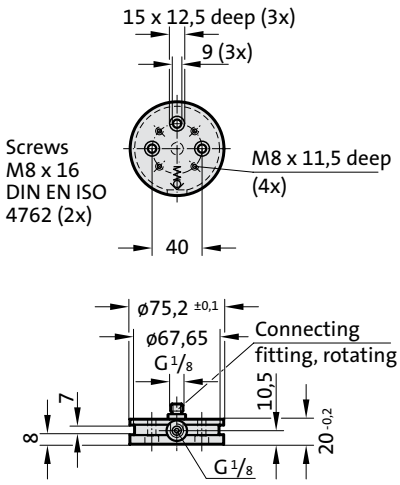


Initial spring force
versus charge pressure

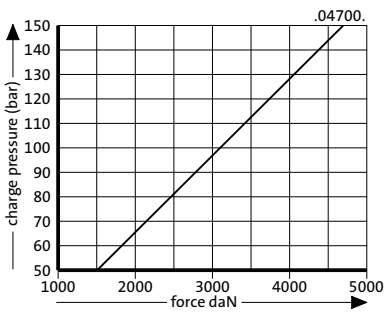


Spring force Diagram displacement versus stroke rise

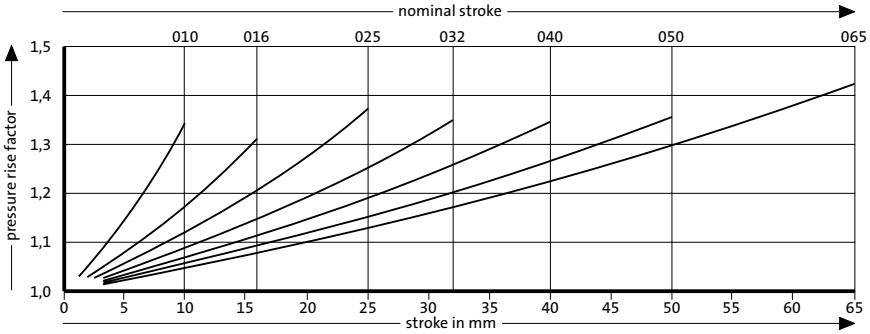


Pressure rise factor accounts for displacement but not external influences!

# COMPACT GAS SPRING
# MOUNTING VARIATIONS

2480.022.03000

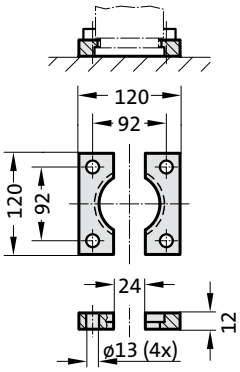


2480.044.03000 [2)]

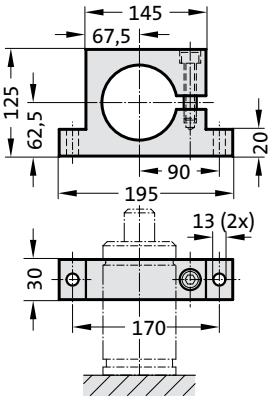


2480.044.03.03000 [2)]

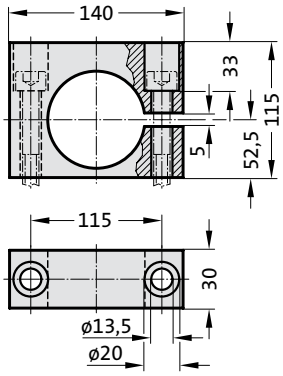


2480.052.07500

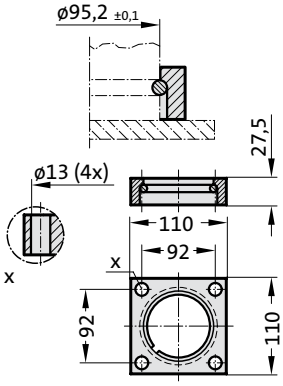


2480.058.03000

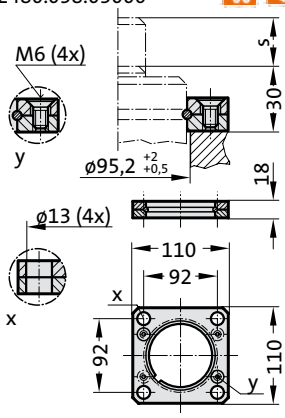


**Mounting example:**

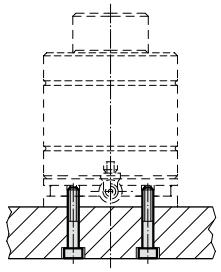

**with Adapter Baseplate**

**Note:**

[2)] Attention:
The spring force must be absorbed by the stop Surface!

**Mounting examples:**

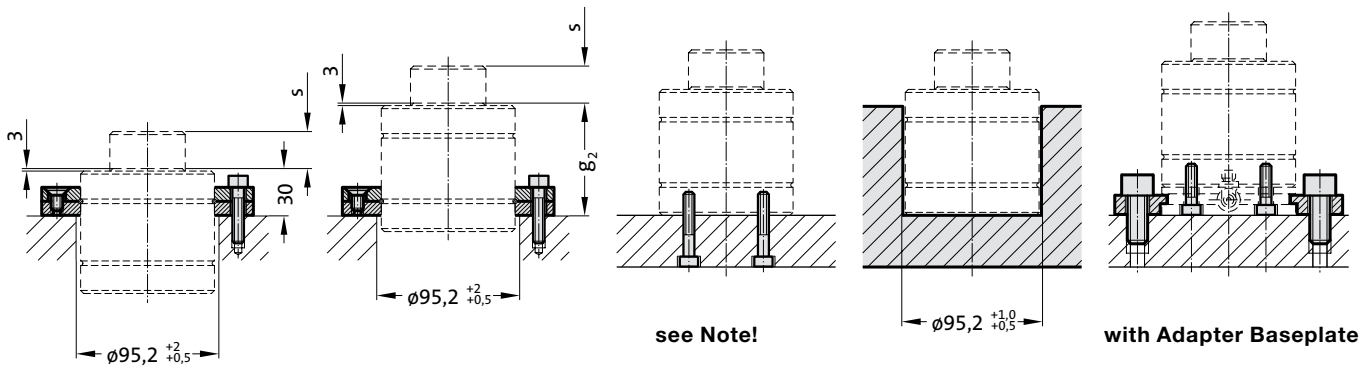

# COMPACT GAS SPRING

**Note:**
Initial spring force at 150 bar = 7500 daN

Order No for spare parts kit: 2490.14.07500

Gas spring without valve
Order No (example): 2490.14.07500. .P

When mounting to floor, contact over the entire floor of the cylinder tube must beensured!
Before fitting the adapter base plate remove the valve from the gas spring.
If vibration occurs, tighten the fixing screws accordingly.

Pressure medium: Nitrogen $N_2$
Max. filling pressure: 150 bar
Min. filling pressure: 25 bar
Working temperature: 0°C to +80°C
Temperature related force increase: ± 0.3%/°C
Max. recommended extensions per minute: approx. 80 to 100 (at 20°C)
Max. piston speed: 0.8 m/s

## 2490.14.07500.

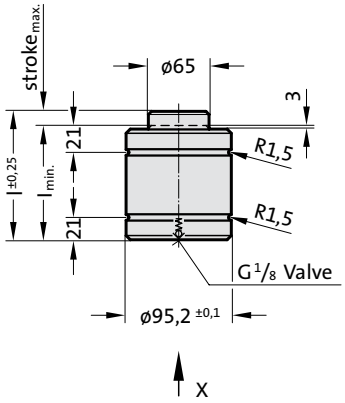

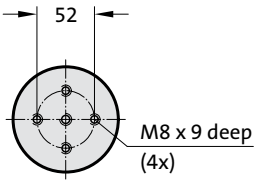


View X

APPROVED PED 2014/68/EU

S>max | V>max | P>max | Flex Guide

**2490.14.07500.**

**Compact gas spring**

| Order No | Stroke$_{max.}$ (s) | $l_{min.}$ | l | $g_2$* |
|---|---|---|---|---|
| 2490.14.07500.010 | 10 | 80 | 90 | 68 |
| 2490.14.07500.016 | 16 | 100 | 116 | 88 |
| 2490.14.07500.025 | 25 | 120 | 145 | 108 |
| 2490.14.07500.032 | 32 | 150 | 182 | 138 |
| 2490.14.07500.040 | 40 | 170 | 210 | 158 |
| 2490.14.07500.050 | 50 | 205 | 255 | 193 |
| 2490.14.07500.065 | 65 | 214 | 279 | 202 |

*see mounting example

## 2480.00.20.07500

Adapter baseplate with connecting Fitting

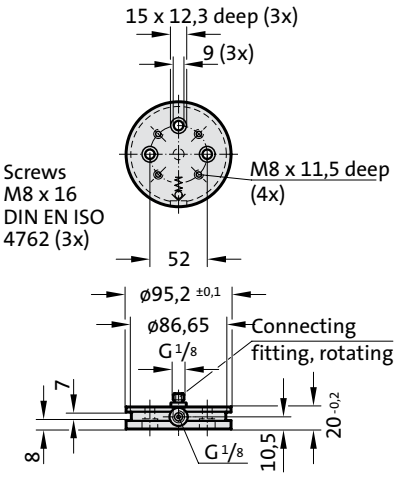


Initial spring force
versus charge pressure

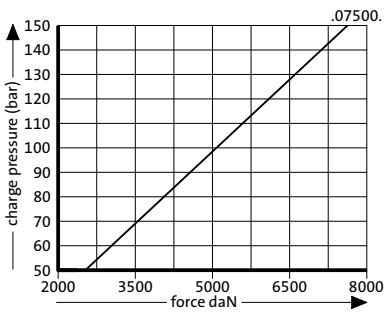


Spring force Diagram displacement versus stroke rise

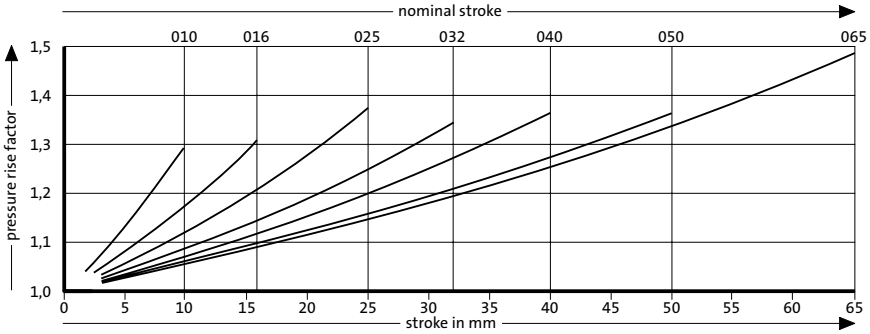


Pressure rise factor accounts for displacement but not external influences!

# COMPACT GAS SPRING
# MOUNTING VARIATIONS

2480.022.05000

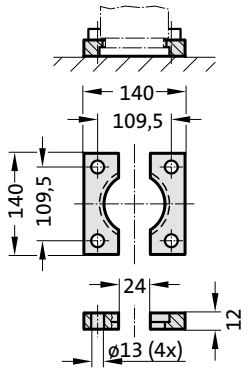


2480.044.05000 [2]

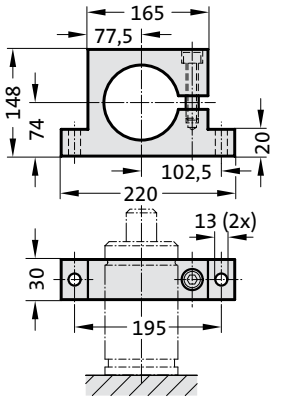


2480.044.03.05000 [2]

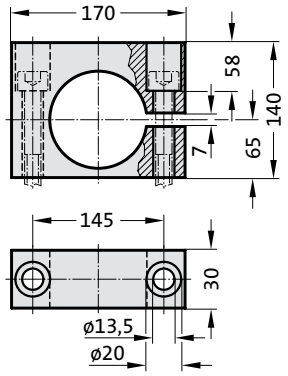


2480.052.11800

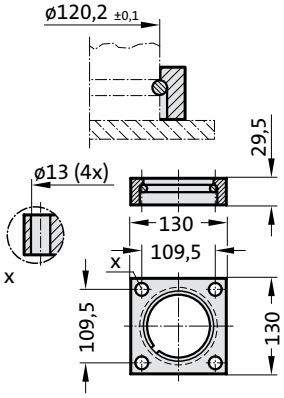


2480.055.05000

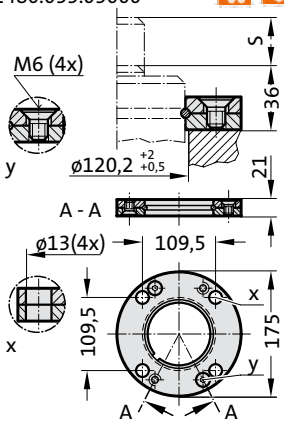


2480.057.05000

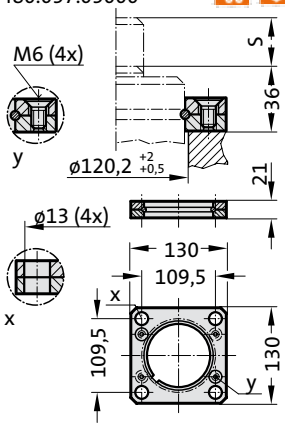


2480.064.05000 [4]

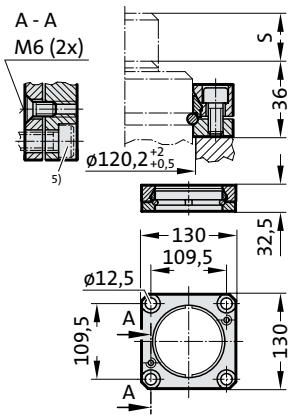


**Mounting example:**

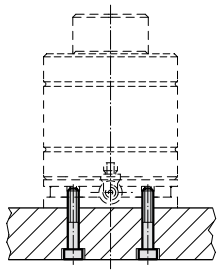

**with Adapter Baseplate**

**Note:**

[2] Attention:
The spring force must be absorbed by the stop Surface!

[4] Square collar flange, non-rotating, fixing for composite connection.

[5] Machine screws with hexagonal socket (compact head recommended)

**Mounting examples:**

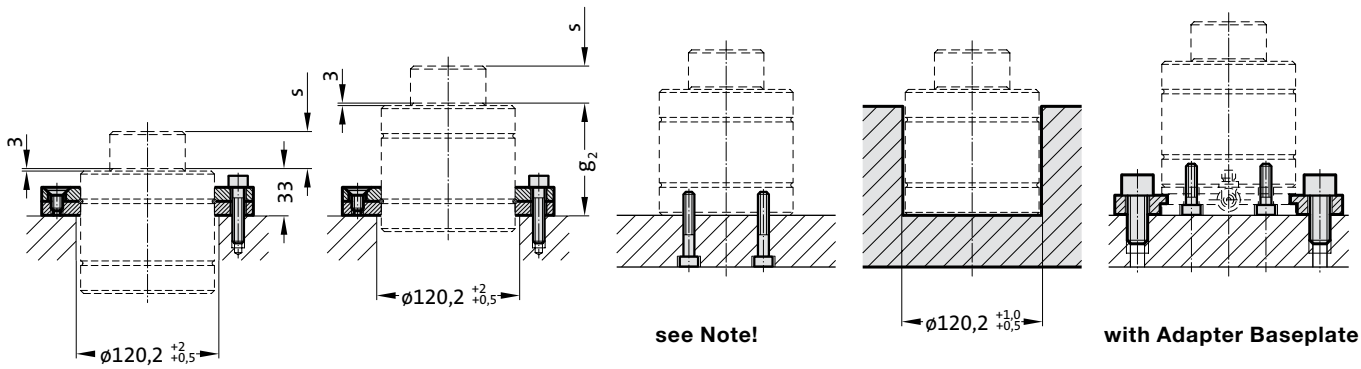

# COMPACT GAS SPRING

**Note:**
Initial spring force at 150 bar = 11800 daN

Order No for spare parts kit: 2490.14.11800

Gas spring without valve
Order No (example): 2490.14.11800. .P

When mounting to floor, contact over the entire floor of the cylinder tube must beensured!
Before fitting the adapter base plate remove the valve from the gas spring.
If vibration occurs, tighten the fixing screws accordingly.

Pressure medium: Nitrogen $N_2$
Max. filling pressure: 150 bar
Min. filling pressure: 25 bar
Working temperature: 0°C to +80°C
Temperature related force increase: ± 0.3%/°C
Max. recommended extensions per minute: approx. 80 to 100 (at 20°C)
Max. piston speed: 0.8 m/s

## 2490.14.11800.

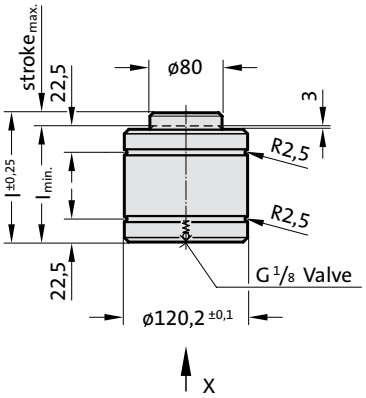

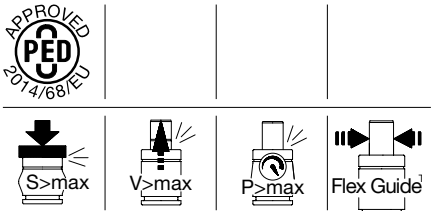


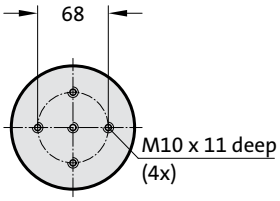


View X

**2490.14.11800.**

**Compact gas spring**

| Order No | Stroke$_{max.}$ (s) | $l_{min.}$ | l | $g_2$* |
|---|---|---|---|---|
| 2490.14.11800.010 | 10 | 90 | 100 | 78 |
| 2490.14.11800.016 | 16 | 110 | 126 | 98 |
| 2490.14.11800.025 | 25 | 130 | 155 | 118 |
| 2490.14.11800.032 | 32 | 155 | 187 | 143 |
| 2490.14.11800.040 | 40 | 180 | 220 | 168 |
| 2490.14.11800.050 | 50 | 210 | 260 | 198 |
| 2490.14.11800.065 | 65 | 255 | 320 | 243 |

*see mounting example

## 2480.00.20.11800

Adapter baseplate with connecting Fitting

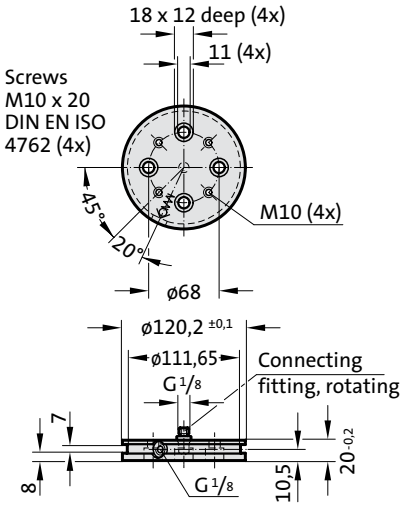


Initial spring force
versus charge pressure

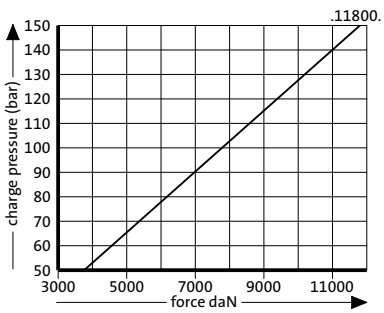


Spring force Diagram displacement versus stroke rise

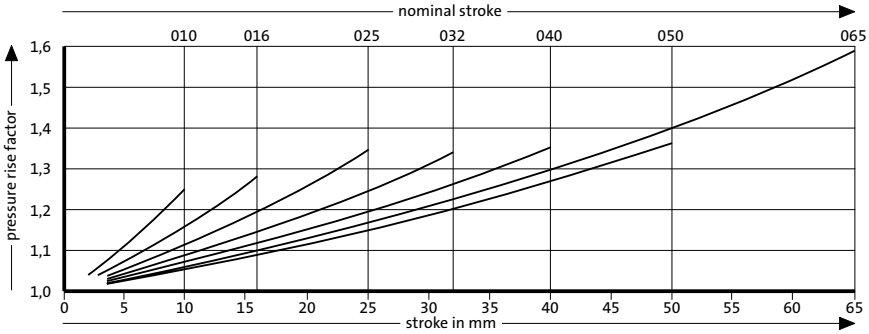


Pressure rise factor accounts for displacement but not external influences!

# COMPACT GAS SPRING
# MOUNTING VARIATIONS

2480.022.07500

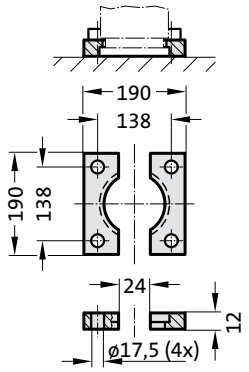


2480.044.07500 [2]

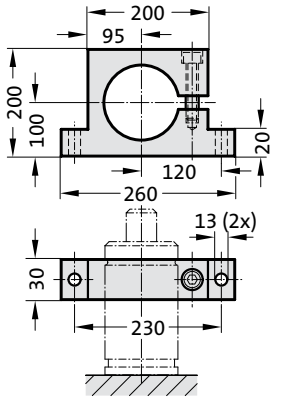


2480.044.03.07500 [2]

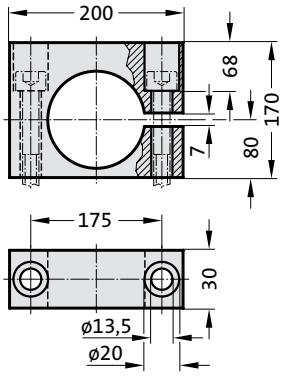


2480.052.18300

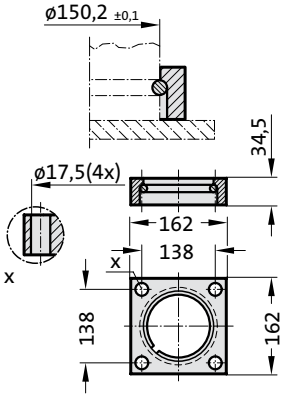


2480.055.07500

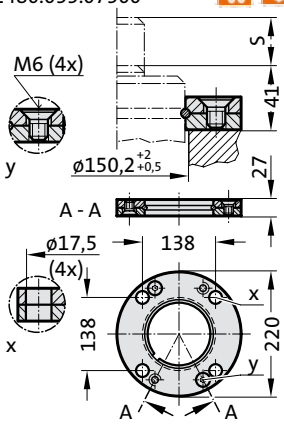


2480.057.07500

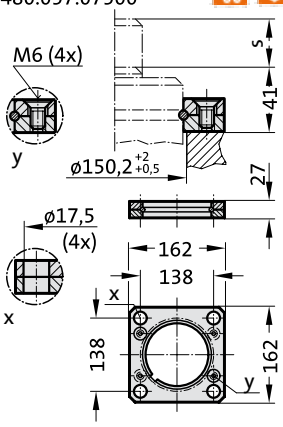


2480.064.07500 [4]

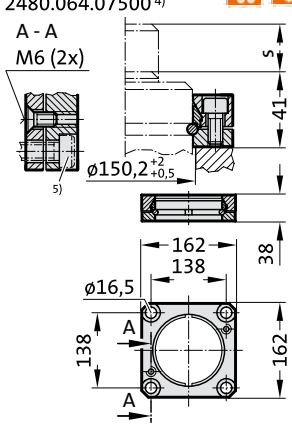


**Mounting example:**

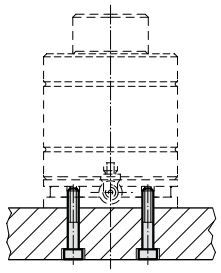

**with Adapter Baseplate**

**Note:**

[2] Attention:
The spring force must be absorbed by the stop Surface!

[4] Square collar flange, non-rotating, fixing for composite connection.

[5] Machine screws with hexagonal socket (compact head recommended)

**Mounting examples:**

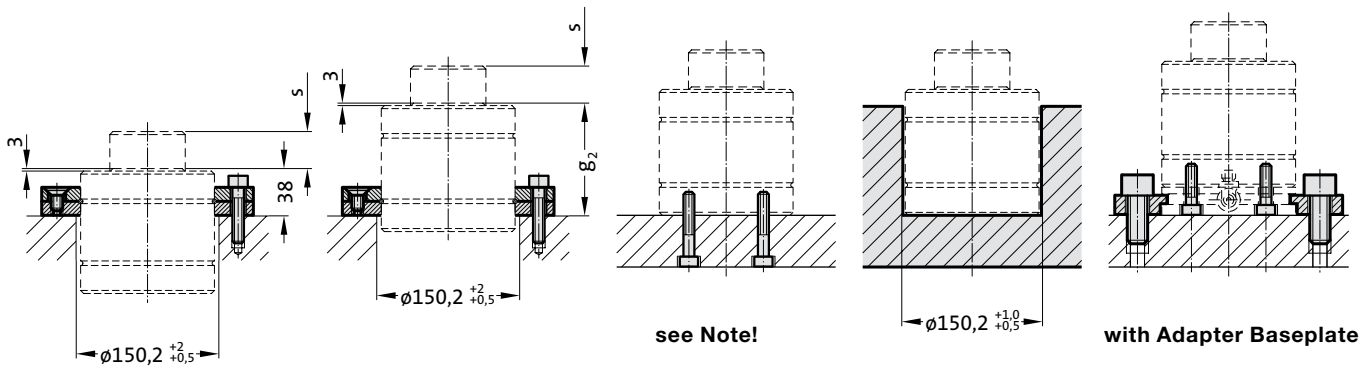

# COMPACT GAS SPRING

**Note:**
Initial spring force at 150 bar = 18300 daN

Order No for spare parts kit: 2490.14.18300

Gas spring without valve
Order No (example): 2490.14.18300. .P

When mounting to floor, contact over the entire floor of the cylinder tube must beensured!
Before fitting the adapter base plate remove the valve from the gas spring.
If vibration occurs, tighten the fixing screws accordingly.

Pressure medium: Nitrogen $N_2$
Max. filling pressure: 150 bar
Min. filling pressure: 25 bar
Working temperature: 0°C to +80°C
Temperature related force increase: ± 0.3%/°C
Max. recommended extensions per minute: approx. 80 to 100 (at 20°C)
Max. piston speed: 0.8 m/s

## 2490.14.18300.

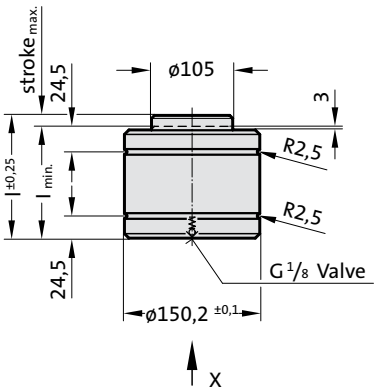

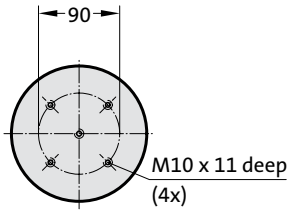


View X

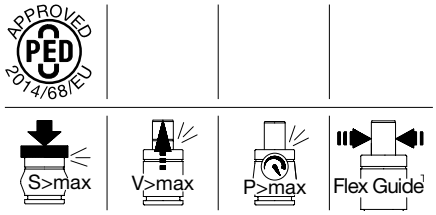


**2490.14.18300.**

**Compact gas spring**

| Order No | Stroke$_{max.}$ (s) | $l_{min.}$ | l | $g_2$* |
|---|---|---|---|---|
| 2490.14.18300.010 | 10 | 100 | 110 | 89 |
| 2490.14.18300.016 | 16 | 120 | 136 | 109 |
| 2490.14.18300.025 | 25 | 140 | 165 | 129 |
| 2490.14.18300.032 | 32 | 165 | 197 | 154 |
| 2490.14.18300.040 | 40 | 195 | 235 | 184 |
| 2490.14.18300.050 | 50 | 220 | 270 | 209 |
| 2490.14.18300.065 | 65 | 258 | 323 | 247 |

*see mounting example

## 2480.00.20.18300

Adapter baseplate with connecting Fitting

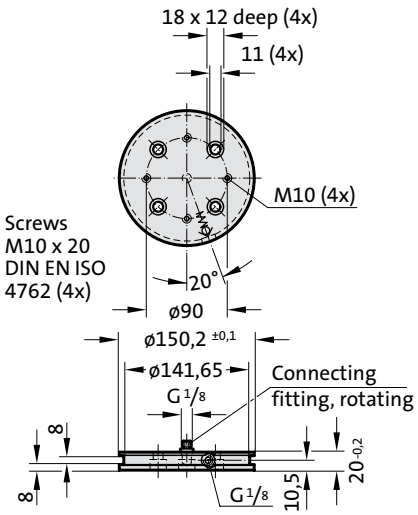


Initial spring force
versus charge pressure

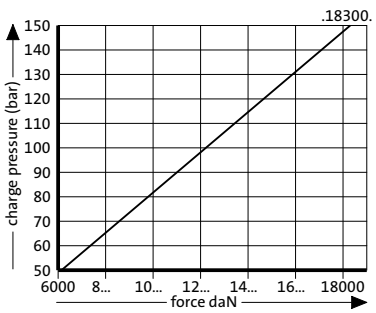


Spring force Diagram displacement versus stroke rise

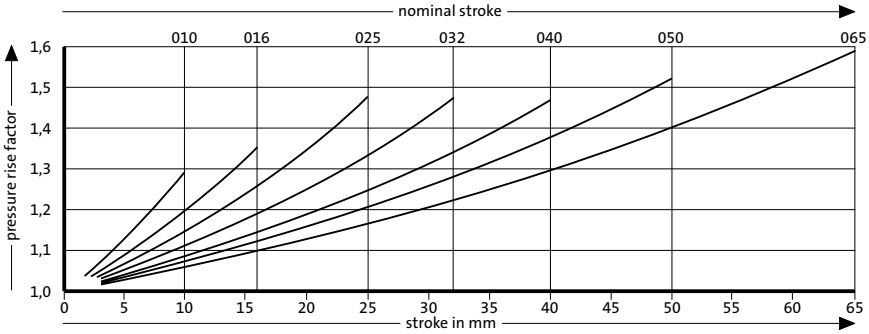


Pressure rise factor accounts for displacement but not external influences!

# GAS SPRINGS LOW BUILD HEIGHT

# GAS SPRINGS LOW BUILD HEIGHT

**Normal construction** **Compact construction** **POWERLINE**

**Construction heights with the same stroke and the same / increased spring force**

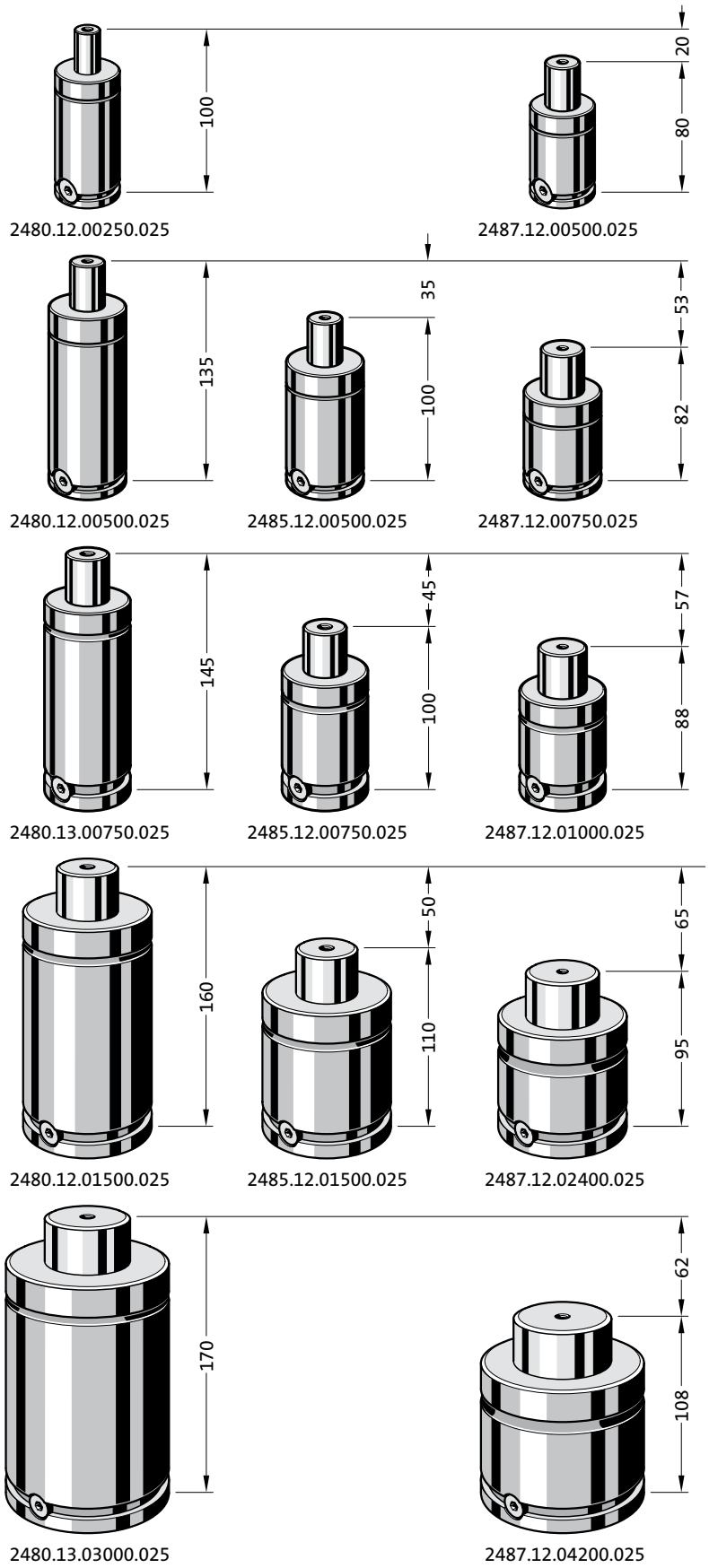

# GAS SPRING, WITH LOW BUILD HEIGHT
# MOUNTING VARIATIONS

2480.007.00500

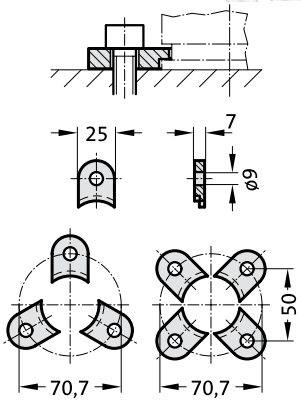


2480.008.00500 [3]

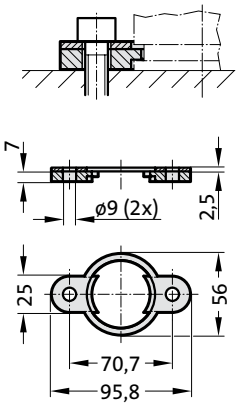


2480.010.00500.095 [3]
2480.010.00500.180* [3]

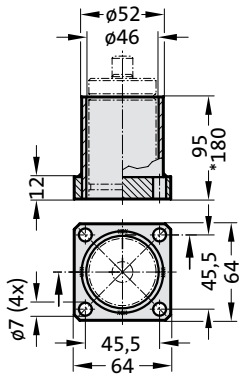


2480.011.00500

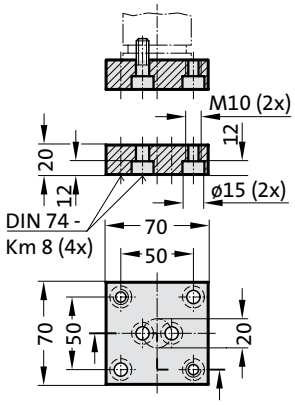


2480.011.00500.1

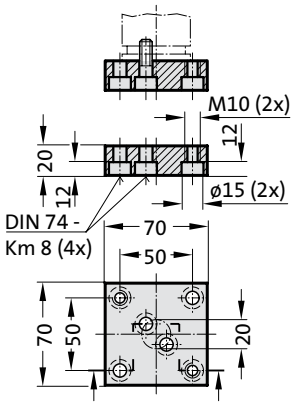


2480.011.00500.2

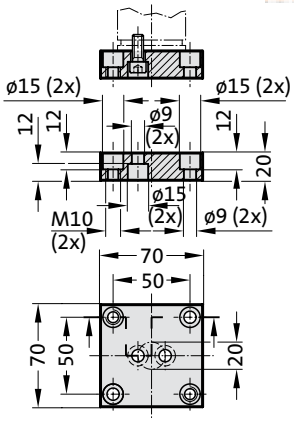


2480.022.00500

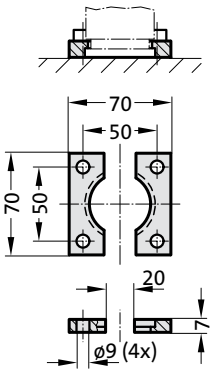


2480.044.00500 [2]

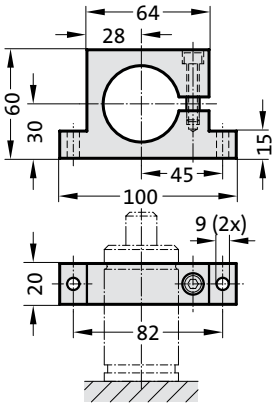


2480.044.03.00500 [2]

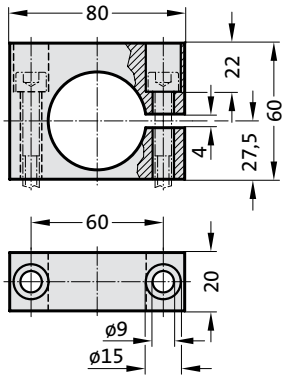


2480.055.00500

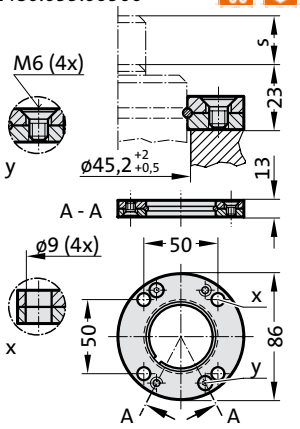


2480.057.00500

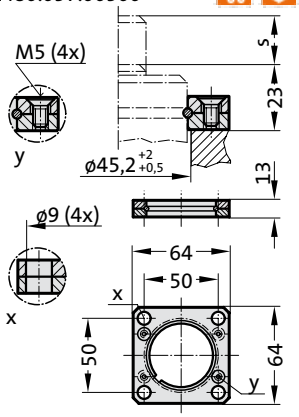


2480.064.00500 [4]

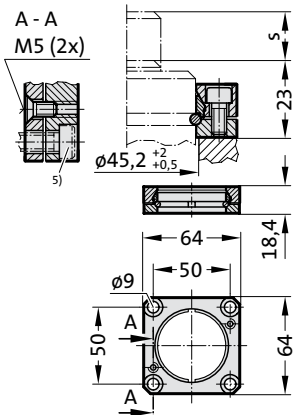


**Note:**

[2] Attention:
The spring force must be absorbed by the stop Surface!
[3] Not for use with composite connection.
[4] Square collar flange, non-rotating, fixing for composite connection.
[5] Machine screws with hexagonal socket (compact head recommended)

# GAS SPRING, WITH LOW BUILD HEIGHT

**Note:**
Initial spring force at 150 bar = 470 daN

Order No for spare parts kit: 2485.12.00500

Gas spring without valve
Order No (example): 2485.12.00500. .P

Pressure medium: Nitrogen $N_2$
Max. filling pressure: 150 bar
Min. filling pressure: 50 bar
Working temperature: 0°C to +80°C
Temperature related force increase: ± 0.3%/°C
Max. recommended extensions per minute:
approx. 40 to 80 (at 20°C)
Max. piston speed: 1.6 m/s

2485.12.00500.

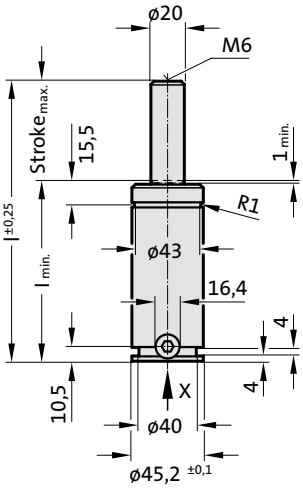


View X - Gas spring

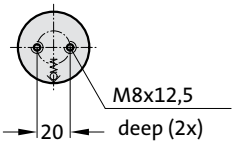

APPROVED PED 2014/68/EU

V>max | P>max | Flex Guide

**2485.12.00500.**

**Gas spring, with low build height**

| Order No | Stroke$_{max.}$ (s) | $l_{min.}$ | l |
|---|---|---|---|
| 2485.12.00500.006 | 6 | 56 | 62 |
| 2485.12.00500.013 | 12.7 | 62.7 | 75.4 |
| 2485.12.00500.019 | 19 | 69.1 | 88.1 |
| 2485.12.00500.025 | 25 | 75 | 100 |
| 2485.12.00500.038 | 38.1 | 88.1 | 126.2 |
| 2485.12.00500.050 | 50 | 100 | 150 |
| 2485.12.00500.063 | 63.5 | 113.5 | 177 |
| 2485.12.00500.080 | 80 | 130 | 210 |
| 2485.12.00500.100 | 100 | 150 | 250 |
| 2485.12.00500.125 | 125 | 175 | 300 |

Initial spring force
versus charge pressure

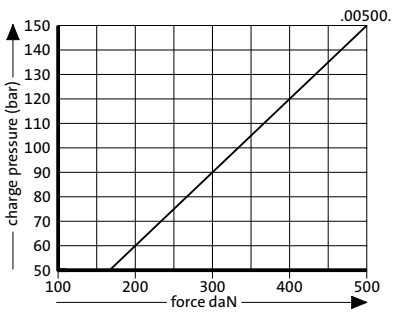


Spring force Diagram displacement versus stroke rise

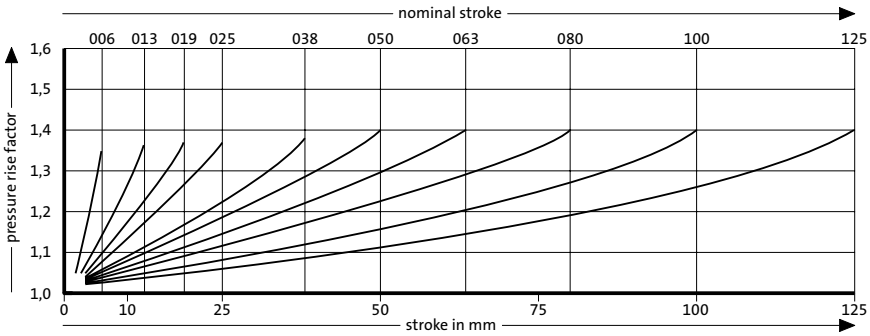


Pressure rise factor accounts for displacement but not external influences!

# GAS SPRING, WITH LOW BUILD HEIGHT
# MOUNTING VARIATIONS

2480.007.00750

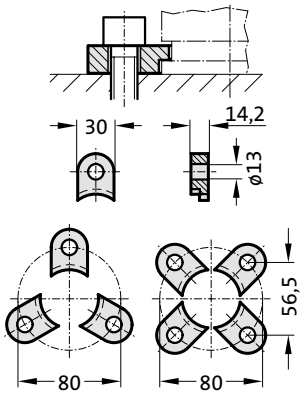


2480.008.00750 [3]

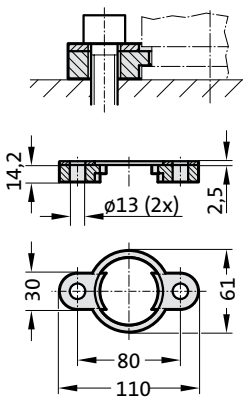


2480.010.00750.115 [3]
2480.010.00750.190* [3]

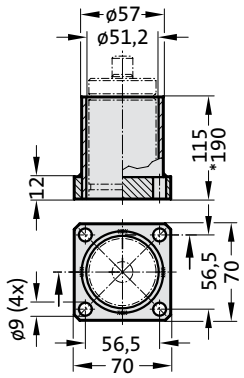


2480.011.00750

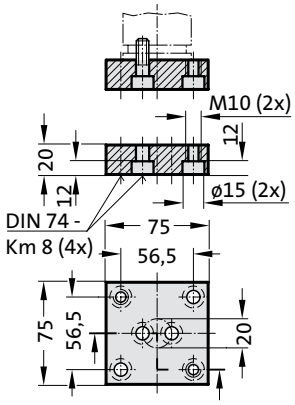


2480.011.00750.1

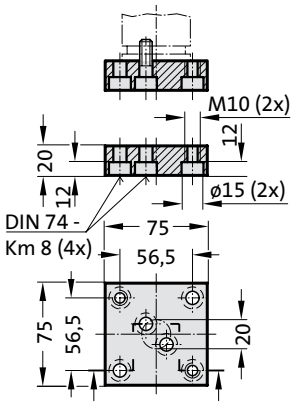


2480.011.00750.3

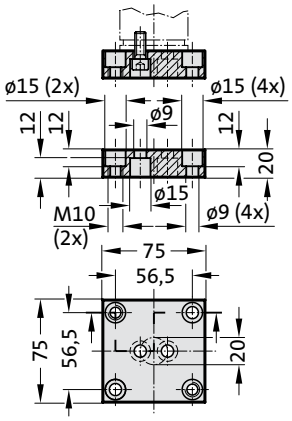


2480.022.00750

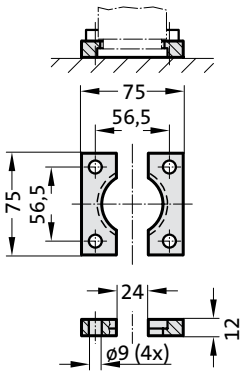


2480.044.00750 [2]

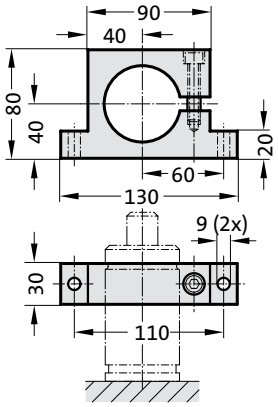


2480.044.03.00750 [2]

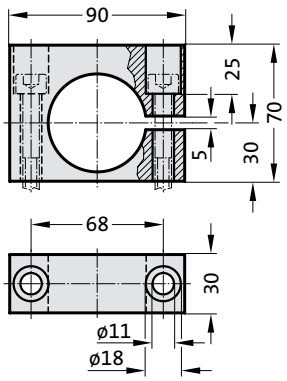


2480.045.00750 [2]

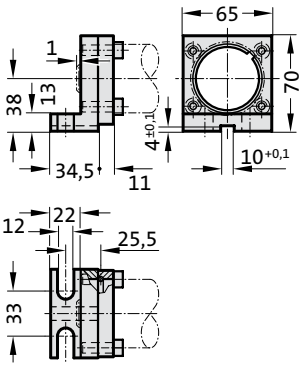


2480.047.00750 [2]

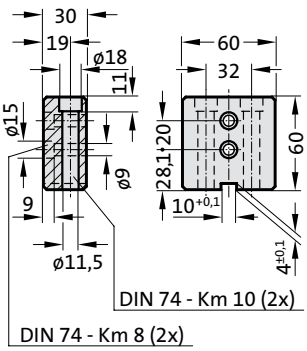


2480.055.00750

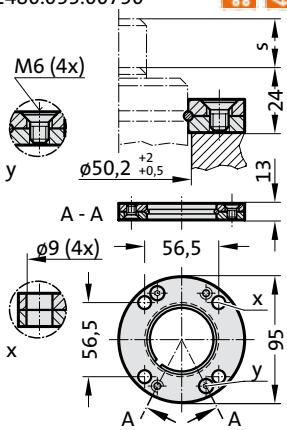


2480.057.00750

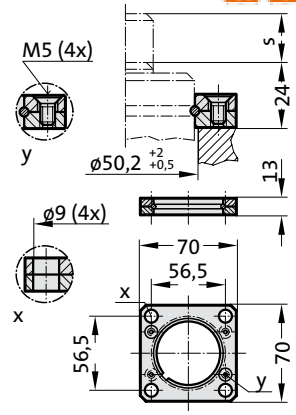


2480.064.00750 [4]

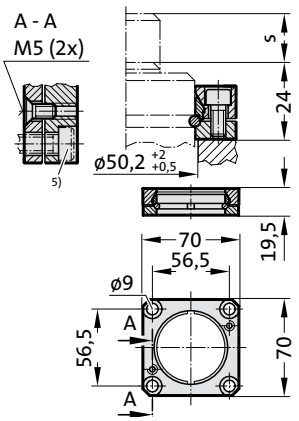


**Note:**

[2] Attention:
The spring force must be absorbed by the stop Surface!
[3] Not for use with composite connection.
[4] Square collar flange, non-rotating, fixing for composite connection.
[5] Machine screws with hexagonal socket (compact head recommended)

# GAS SPRING, WITH LOW BUILD HEIGHT

**Note:**
Initial spring force at 150 bar = 750 daN

Order No for spare parts kit: 2485.12.00750

Gas spring without valve
Order No (example): 2485.12.00750. .P

Pressure medium: Nitrogen $N_2$
Max. filling pressure: 150 bar
Min. filling pressure: 25 bar
Working temperature: 0°C to +80°C
Temperature related force increase: ± 0.3%/°C
Max. recommended extensions per minute:
approx. 15 to 40 (at 20°C)
Max. piston speed: 1.6 m/s

## 2485.12.00750.

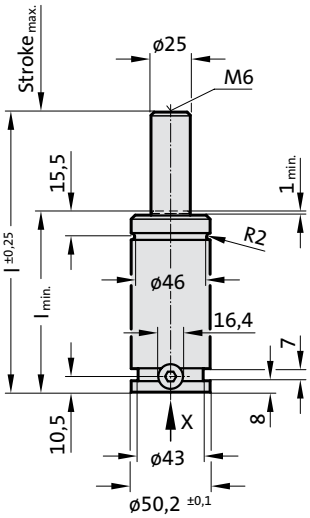


View X - Gas spring

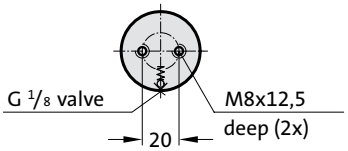

APPROVED PED 2014/68/EU

V>max | P>max | Flex Guide

**2485.12.00750.**

**Gas spring, with low build height**

| Order No | Stroke$_{max.}$ (s) | $l_{min.}$ | l |
|---|---|---|---|
| 2485.12.00750.006 | 6 | 56 | 62 |
| 2485.12.00750.013 | 12.7 | 62.7 | 75.4 |
| 2485.12.00750.019 | 19 | 69.1 | 88.1 |
| 2485.12.00750.025 | 25 | 75 | 100 |
| 2485.12.00750.038 | 38.1 | 88.1 | 126.2 |
| 2485.12.00750.050 | 50 | 100 | 150 |
| 2485.12.00750.063 | 63.5 | 113.5 | 177 |
| 2485.12.00750.080 | 80 | 130 | 210 |
| 2485.12.00750.100 | 100 | 150 | 250 |
| 2485.12.00750.125 | 125 | 175 | 300 |

Initial spring force
versus charge pressure

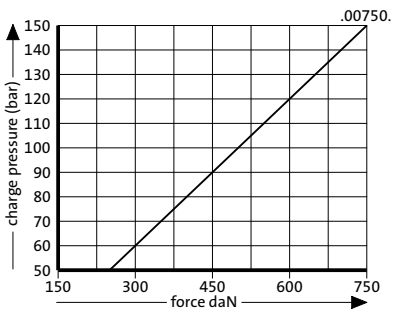


Spring force Diagram displacement versus stroke rise

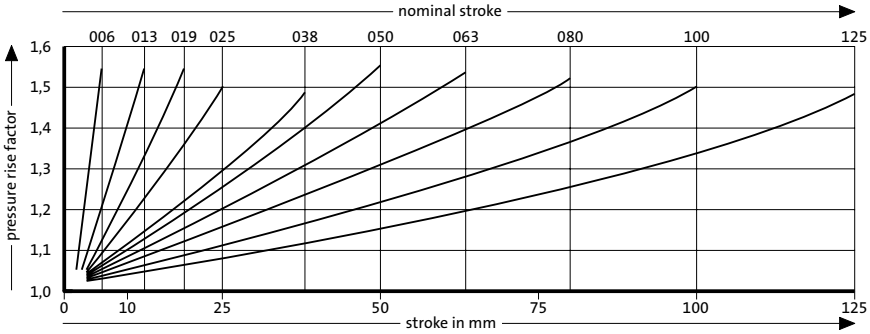


Pressure rise factor accounts for displacement but not external influences!

# GAS SPRING, WITH LOW BUILD HEIGHT
# MOUNTING VARIATIONS

2480.007.01500

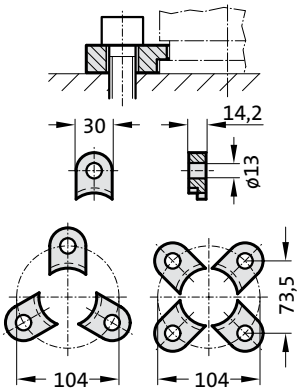


2480.008.01500 [3]

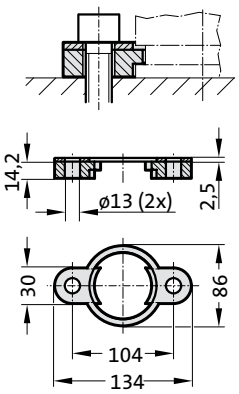


2480.011.01500

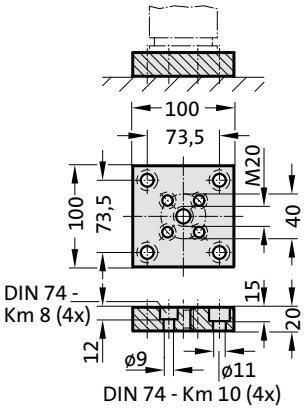


2480.011.01500.2

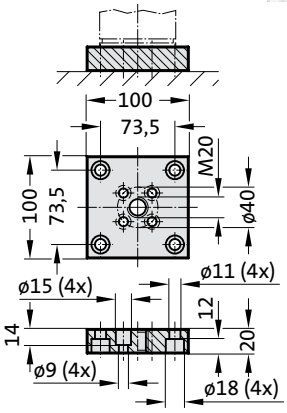


2480.022.01500

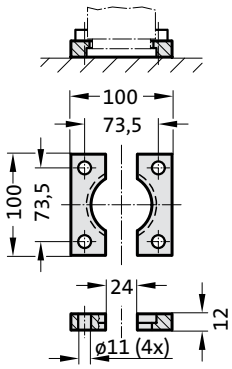


2480.044.01500 [2]

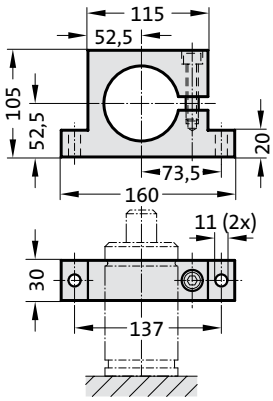


2480.044.03.01500 [2]

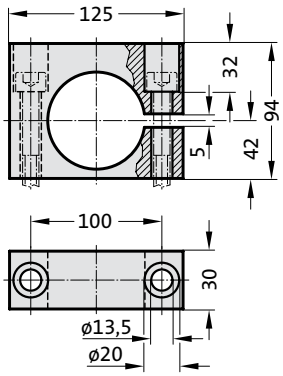


2480.047.01500 [2]

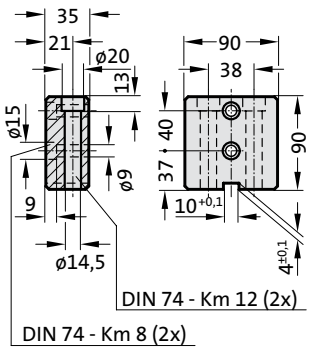


2480.058.01500

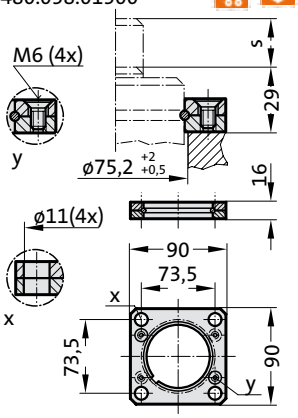


**Note:**

[2] Attention:
The spring force must be absorbed by the stop Surface!

[3] Not for use with composite connection.

# GAS SPRING, WITH LOW BUILD HEIGHT

**Note:**
Initial spring force at 150 bar = 1500 daN

Order No for spare parts kit: 2485.12.01500

Gas spring without valve
Order No (example): 2485.12.01500. .P

Pressure medium: Nitrogen $N_2$
Max. filling pressure: 150 bar
Min. filling pressure: 25 bar
Working temperature: 0°C to +80°C
Temperature related force increase: ± 0.3%/°C
Max. recommended extensions per minute:
approx. 15 to 40 (at 20°C)
Max. piston speed: 1.6 m/s

2485.12.01500.

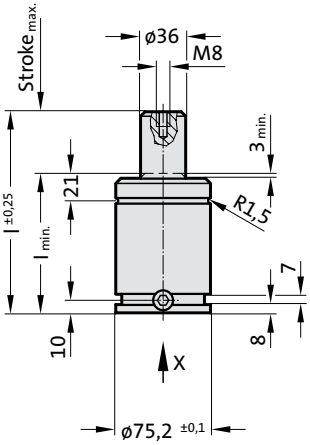


View X - Gas spring

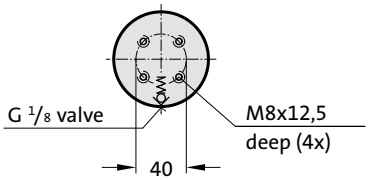

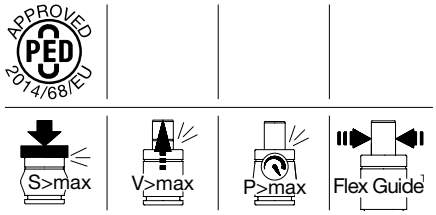


**2485.12.01500.**

**Gas spring, with low build height**

| Order No | Stroke$_{max.}$ (s) | $l_{min.}$ | l |
|---|---|---|---|
| 2485.12.01500.025 | 25 | 85 | 110 |
| 2485.12.01500.038 | 38.1 | 98.1 | 136.2 |
| 2485.12.01500.050 | 50 | 110 | 160 |
| 2485.12.01500.063 | 63.5 | 123.5 | 187 |
| 2485.12.01500.080 | 80 | 140 | 220 |
| 2485.12.01500.100 | 100 | 160 | 260 |

Initial spring force
versus charge pressure

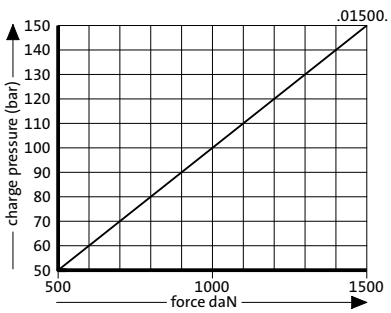


Spring force Diagram displacement versus stroke rise

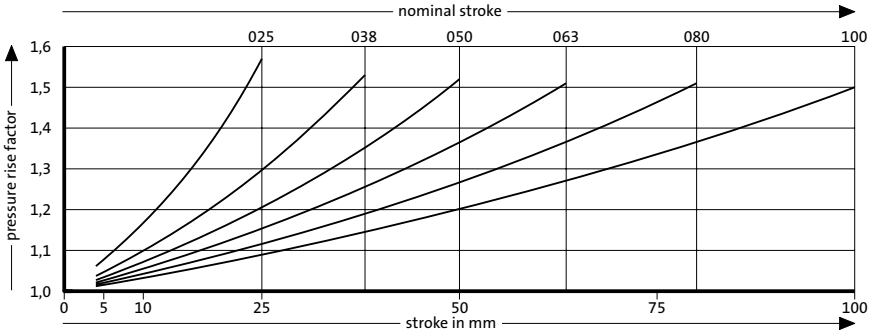


Pressure rise factor accounts for displacement but not external influences!

# GAS SPRINGS SPC - SPEED CONTROL™

# GAS SPRINGS SPC - SPEED CONTROL™

APPROVED PED 2014/68/EU

## Description:

FIBRO SPC - SPEED CONTROL™ gas springs  have been engineered to reduce or eliminate blank holder bounce; commonly associated with increased return stroke speeds form link drive presses.

The SPC gas springs have an integrated return stroke delay, which reduces the speed of the gas spring to 0.4 m/s during the last 30 mm stroke. This gently stops the sheet holder.

## Properties:

- prevents the blank holder springing back
- Productivity increase due to more efficient parts transport
- Easy to install in existing tools
- Stroke lengths of 125 to 300 mm
- can be connected to existing hose system

# GAS SPRINGS SPC - SPEED CONTROL™

## Performance:

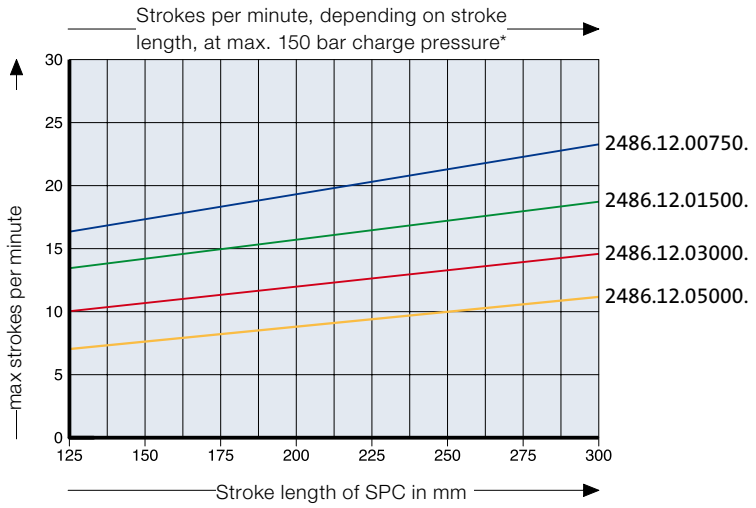


The diagram shows the max. possible number of strokes per minutes [min-1] of SPC gas springs with a max. filling pressure (150 bar) and max. used stroke lengths before there is a risk of excessive heating.

**Note !**
The number of strokes per minutes can be doubled by halving the initial filling pressure.

**Caution !**
SPC gas springs are subject to a higher heating than standard gas springs. For this reason, please ensure adequate ventilation of the SPC gas springs in the tool.

*At ambient room temperature with free air flow

## Function example:

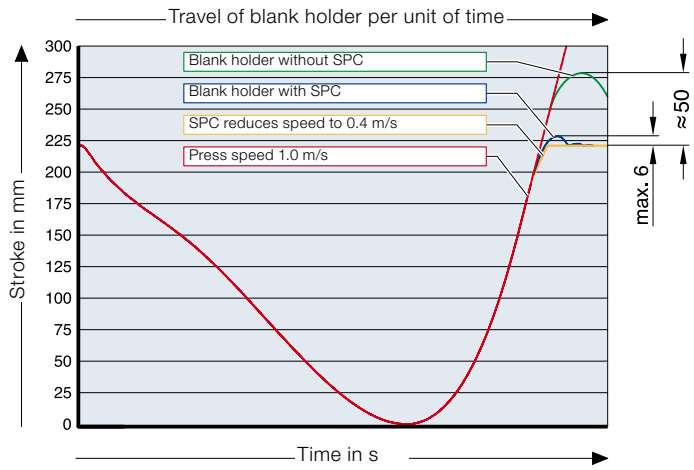


**SPC - SPEED CONTROL™ gas springs gave a 90% reduction of blank holder bounce.**

## Installation:

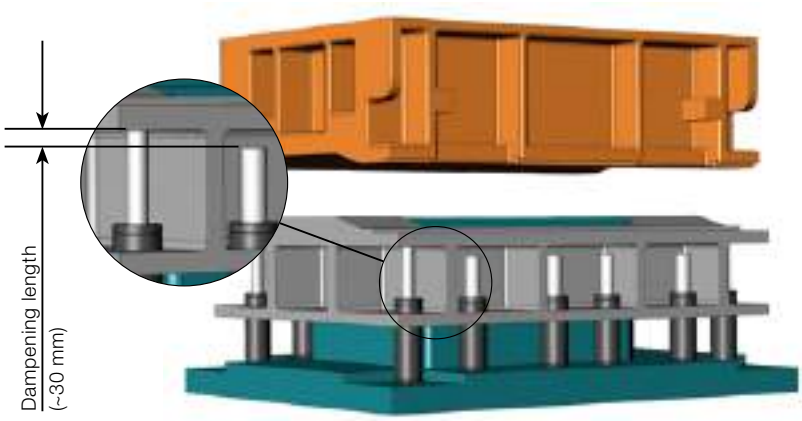


It is important that approx. 25 to 30 mm before the sheet metal retainer has reached its home position, only SPC gas springs are applied. Therefore, for the retrofitting of existing tools with SPC gas springs we recommend the following two options:

**Option 1:**
Replace all existing gas springs holding the blank holder with SPC gas springs

**Option 2:**
SPC gas springs with a min. 25 mm longer nominal stroke length than with the "main gas pressure springs" are positioned at the four corners of the blank holder. This lifts the blank holder from the "main gas pressure springs".

**Attention:**
Springs must be installed with a recess of 25 mm to balance the total length difference (2 x stroke length = 50 mm). Alternatively, the contact surface of the sheet metal retainer can be recessed in order to achieve the same effect.

# GAS SPRING SPEED CONTROL, CUSHIONED
# MOUNTING VARIATIONS

2480.007.01500

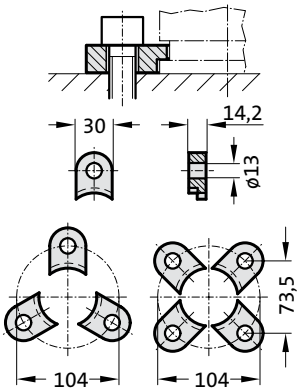


2480.008.01500 [3]

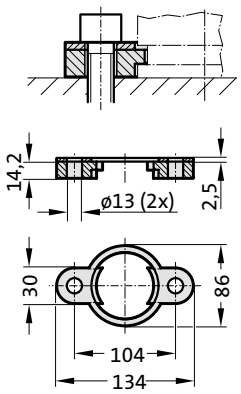


2480.011.01500

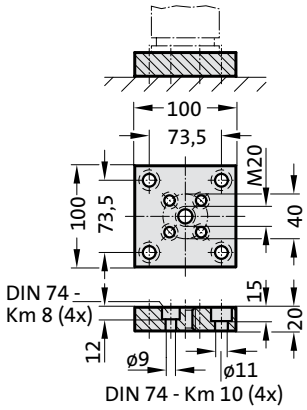


2480.011.01500.2

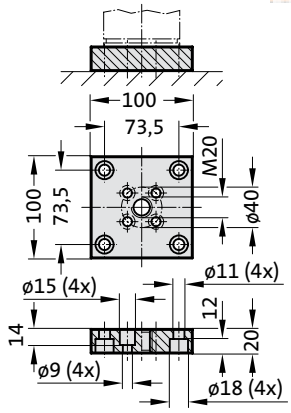


2480.022.01500

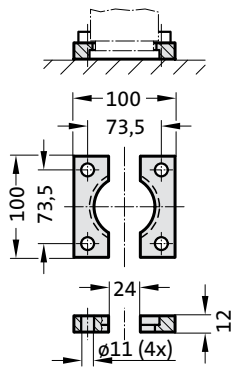


2480.044.01500 [2]

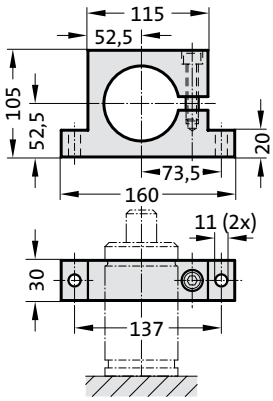


2480.044.03.01500 [2]

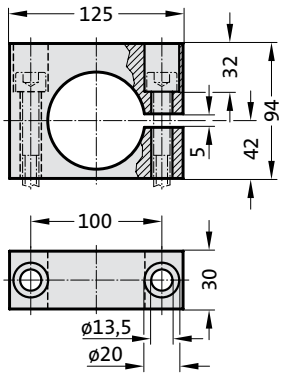


2480.045.01500 [2]

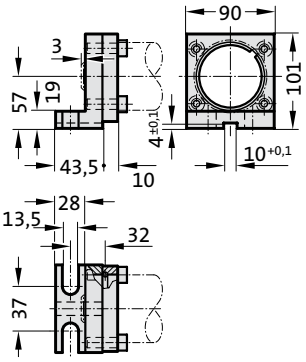


2480.047.01500 [2]

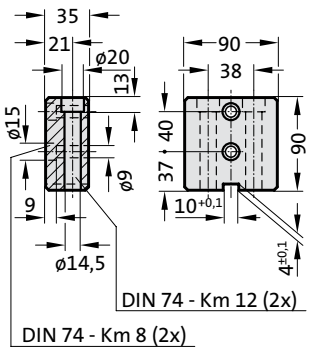


2480.055.01500

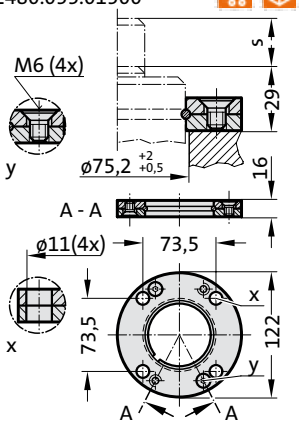


2480.057.01500

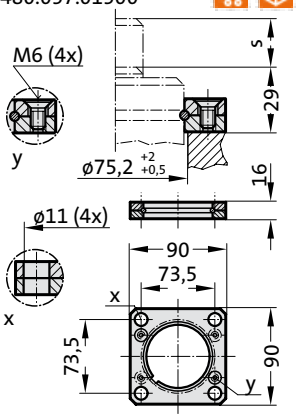


2480.064.01500 [4]

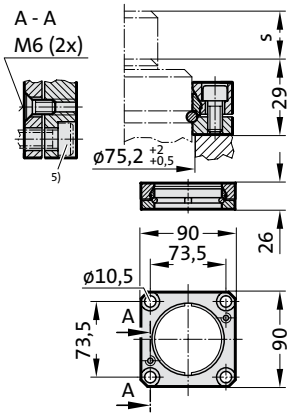


**Note:**

[2] Attention:
The spring force must be absorbed by the stop Surface!

[3] Not for use with composite connection.

[4] Square collar flange, non-rotating, fixing for composite connection.

[5] Machine screws with hexagonal socket (compact head recommended)

# GAS SPRING SPEED CONTROL, CUSHIONED

**Note:**
Initial spring force at 150 bar = 750 daN

Order No for spare parts kit: 2486.12.00750

Pressure medium: Nitrogen $N_2$
Max. filling pressure: 150 bar
Min. filling pressure: 25 bar
Working temperature: 0°C to +80°C
Temperature related force increase: ± 0.3%/°C
Max. recommended extensions per minute:
approx. 16 to 24 (at 20°C)
Dampening length: ~ 30 mm
Piston rod speed, decelerated: 0.4 m/s

2486.12.00750.

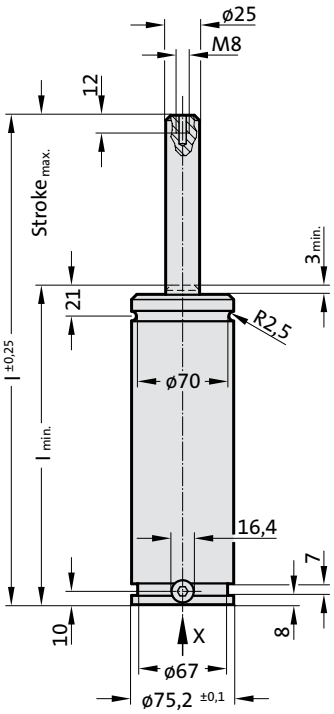


View X - Gas spring

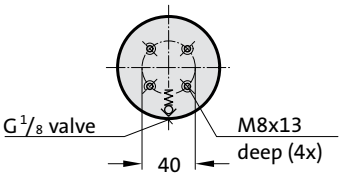

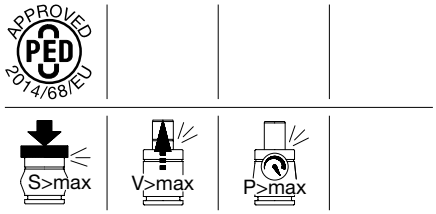


**2486.12.00750.**

**Gas spring SPEED CONTROL, cushioned**

| Order No | Stroke$_{max.}$ (s) | $l_{min.}$ | l |
|---|---|---|---|
| 2486.12.00750.125 | 125 | 235 | 360 |
| 2486.12.00750.160 | 160 | 270 | 430 |
| 2486.12.00750.200 | 200 | 310 | 510 |
| 2486.12.00750.250 | 250 | 360 | 610 |
| 2486.12.00750.300 | 300 | 410 | 710 |

Initial spring force
versus charge pressure

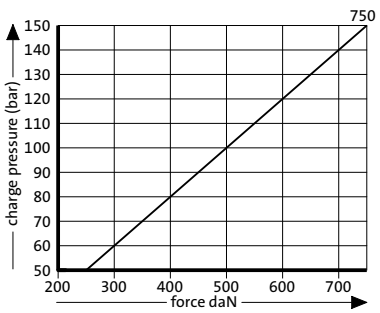


Spring force Diagram displacement versus stroke rise

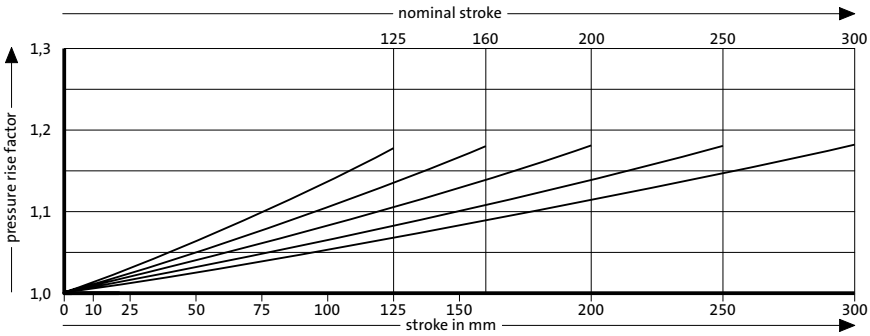


Pressure rise factor accounts for displacement but not external influences!

# GAS SPRING SPEED CONTROL, CUSHIONED
# MOUNTING VARIATIONS

2480.007.03000

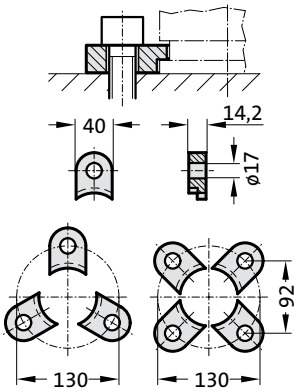


2480.008.03000 [3]

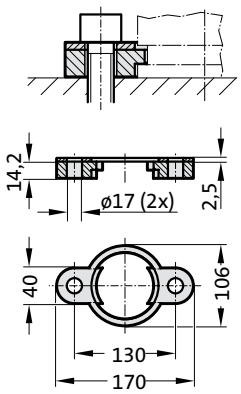


2480.011.03000

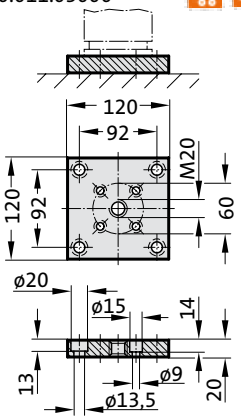


2480.011.03000.2

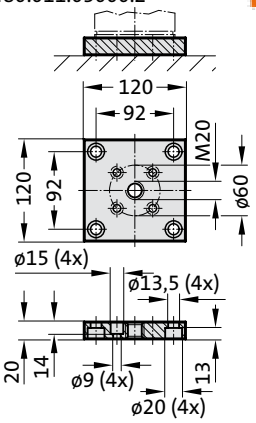


2480.022.03000

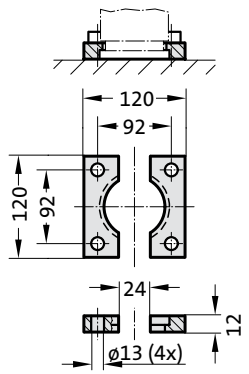


2480.044.03000 [2]

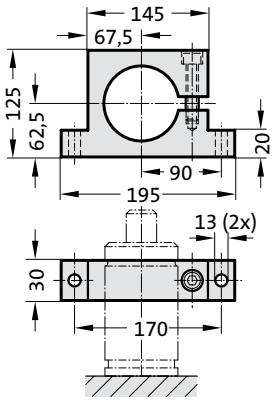


2480.044.03.03000 [2]

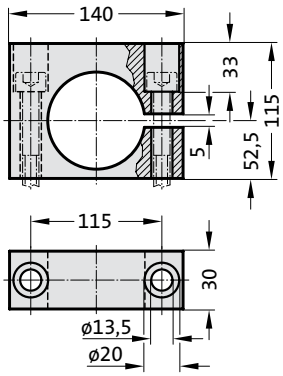


2480.045.03000 [2]

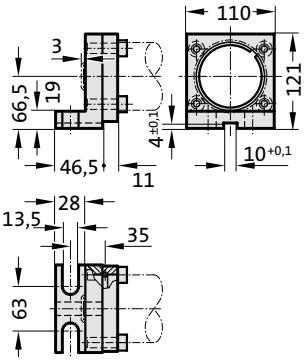


2480.047.03000 [2]

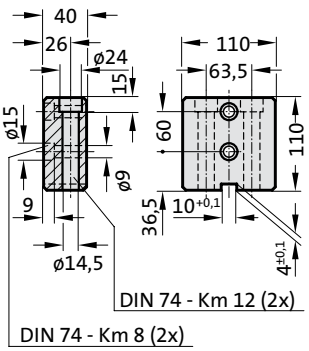


2480.055.03000

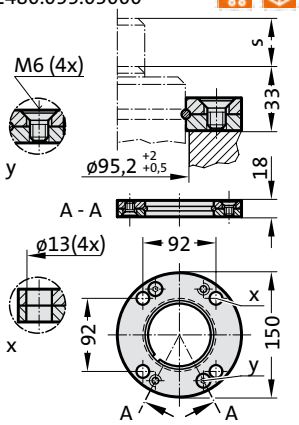


2480.057.03000

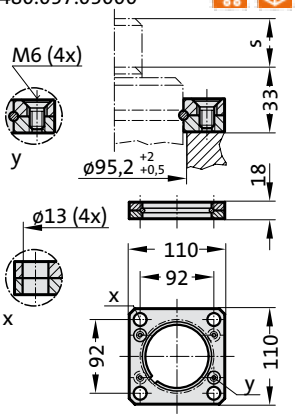


2480.064.03000 [4]

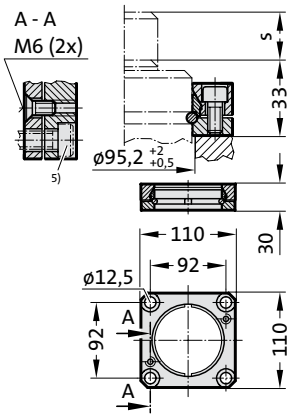


**Note:**

[2] Attention:
The spring force must be absorbed by the stop Surface!

[3] Not for use with composite connection.

[4] Square collar flange, non-rotating, fixing for composite connection.

[5] Machine screws with hexagonal socket (compact head recommended)

# GAS SPRING SPEED CONTROL, CUSHIONED

**Note:**
Initial spring force at 150 bar = 1500 daN

Order No for spare parts kit: 2486.12.01500

Pressure medium: Nitrogen $N_2$
Max. filling pressure: 150 bar
Min. filling pressure: 25 bar
Working temperature: 0°C to +80°C
Temperature related force increase: ± 0.3%/°C
Max. recommended extensions per minute:
approx. 14 to 19 (at 20°C)
Dampening length: ~ 30 mm
Piston rod speed, decelerated: 0.4 m/s

2486.12.01500.

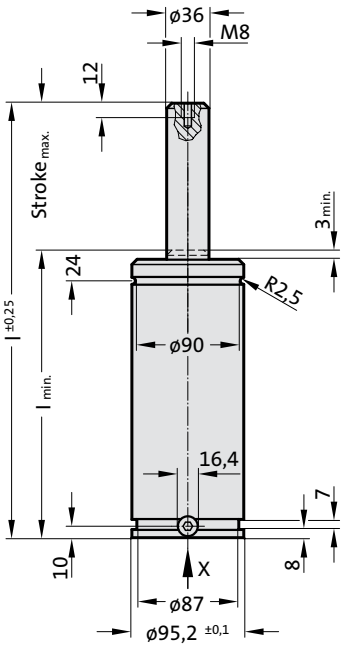


View X - Gas spring

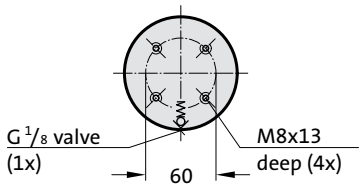

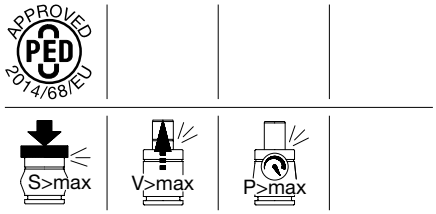


**2486.12.01500.**

**Gas spring SPEED CONTROL, cushioned**

| Order No | Stroke$_{max.}$ (s) | $l_{min.}$ | l |
|---|---|---|---|
| 2486.12.01500.125 | 125 | 245 | 370 |
| 2486.12.01500.160 | 160 | 280 | 440 |
| 2486.12.01500.200 | 200 | 320 | 520 |
| 2486.12.01500.250 | 250 | 370 | 620 |
| 2486.12.01500.300 | 300 | 420 | 720 |

Initial spring force
versus charge pressure

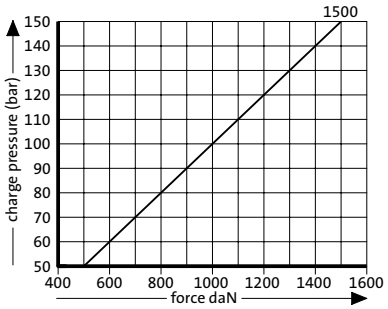


Spring force Diagram displacement versus stroke rise

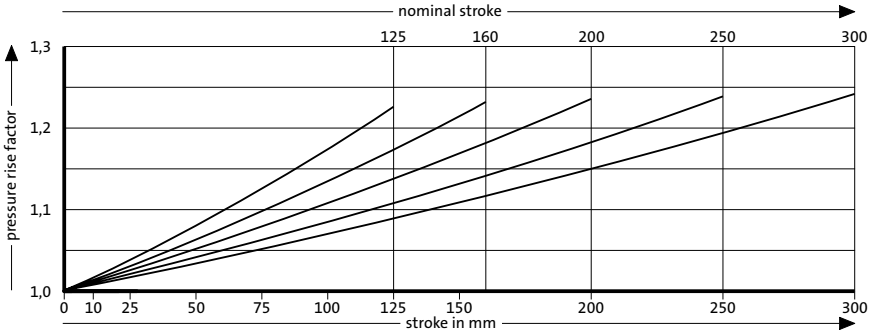


Pressure rise factor accounts for displacement but not external influences!

# GAS SPRING SPEED CONTROL, CUSHIONED
# MOUNTING VARIATIONS

2480.007.05000

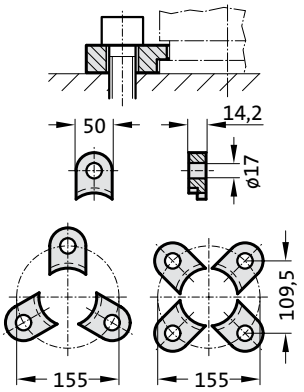


2480.008.05000 [3]

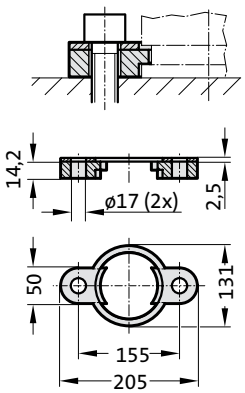


2480.011.05000

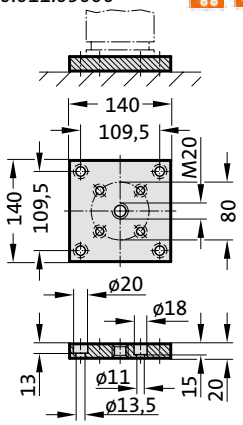


2480.011.05000.2

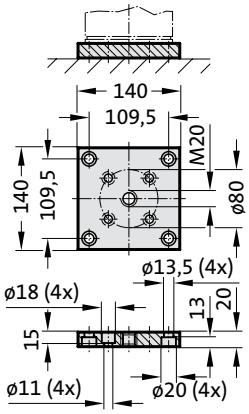


2480.022.05000

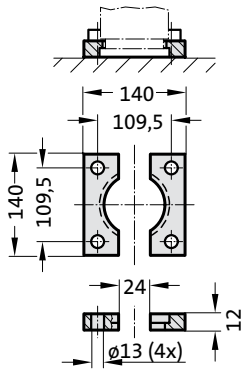


2480.044.05000 [2]

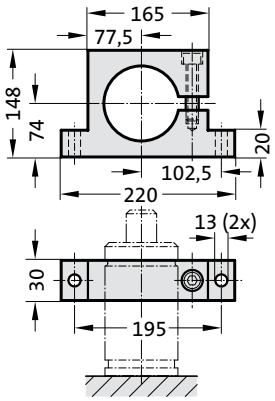


2480.044.03.05000 [2]

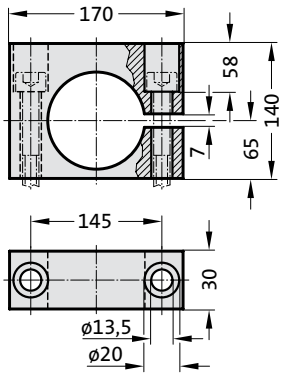


2480.045.05000 [2]

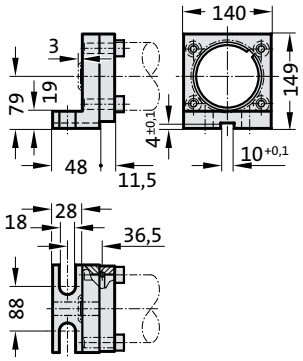


2480.047.05000 [2]

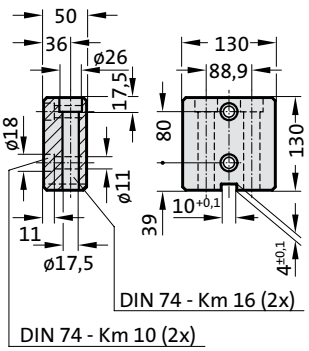


2480.055.05000

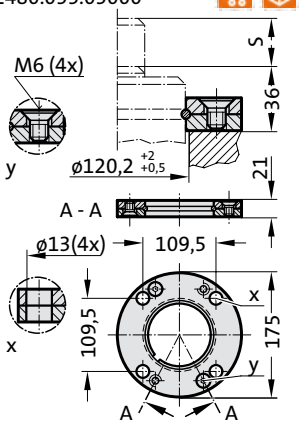


2480.057.05000

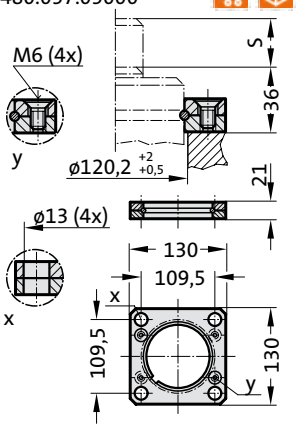


2480.064.05000 [4]

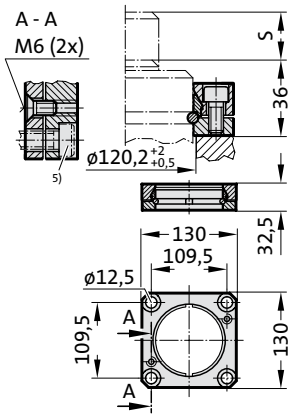


**Note:**

[2] Attention:
The spring force must be absorbed by the stop Surface!

[3] Not for use with composite connection.

[4] Square collar flange, non-rotating, fixing for composite connection.

[5] Machine screws with hexagonal socket (compact head recommended)

# GAS SPRING SPEED CONTROL, CUSHIONED

**Note:**
Initial spring force at 150 bar = 3000 daN

Order No for spare parts kit: 2486.12.03000

Pressure medium: Nitrogen $N_2$
Max. filling pressure: 150 bar
Min. filling pressure: 25 bar
Working temperature: 0°C to +80°C
Temperature related force increase: ± 0.3%/°C
Max. recommended extensions per minute:
approx. 10 to 13 (at 20°C)
Dampening length: ~ 30 mm
Piston rod speed, decelerated: 0.4 m/s

2486.12.03000.

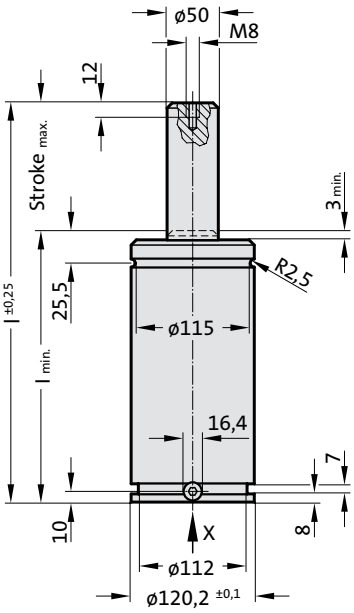


View X - Gas spring

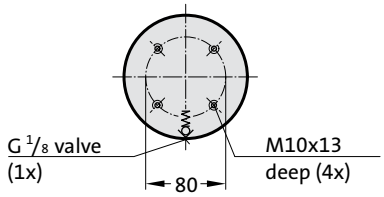

APPROVED PED 2014/68/EU

S>max V>max P>max

**2486.12.03000.**

**Gas spring SPEED CONTROL, cushioned**

| Order No | Stroke$_{max.}$ (s) | $l_{min.}$ | l |
|---|---|---|---|
| 2486.12.03000.125 | 125 | 265 | 390 |
| 2486.12.03000.160 | 160 | 300 | 460 |
| 2486.12.03000.200 | 200 | 340 | 540 |
| 2486.12.03000.250 | 250 | 390 | 640 |
| 2486.12.03000.300 | 300 | 440 | 740 |

Initial spring force
versus charge pressure

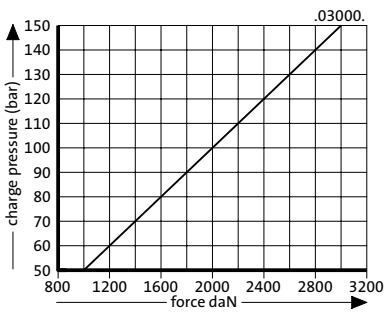


Spring force Diagram displacement versus stroke rise

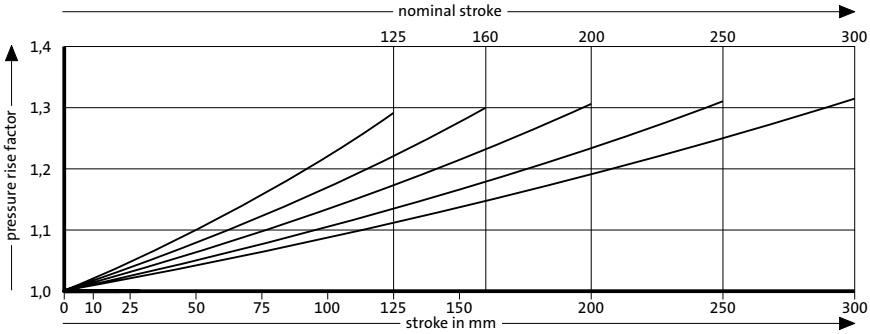


Pressure rise factor accounts for displacement but not external influences!

# GAS SPRING SPEED CONTROL, CUSHIONED
# MOUNTING VARIATIONS

2480.007.07500

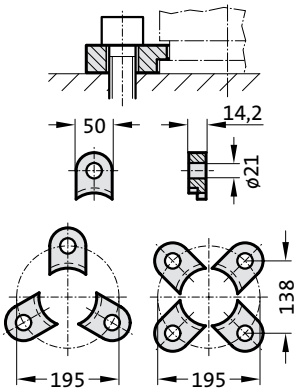


2480.008.07500 [3]

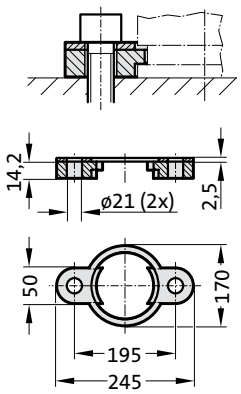


2480.011.07500

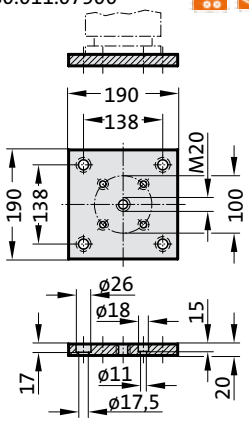


2480.011.07500.2

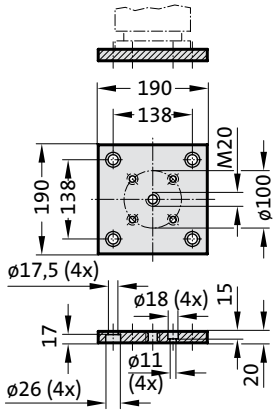


2480.011.03.07500

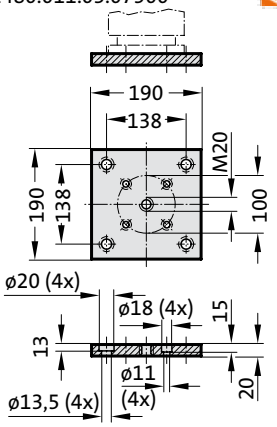


2480.011.03.07500.2

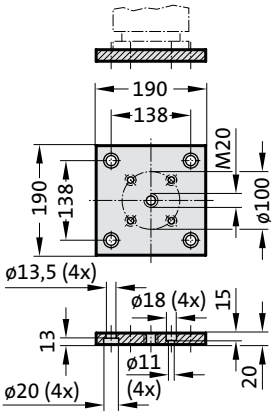


2480.022.07500

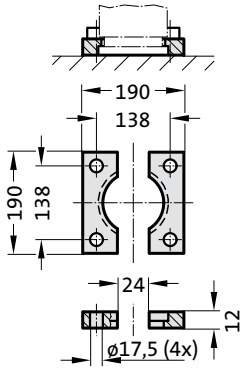


2480.044.07500 [2]

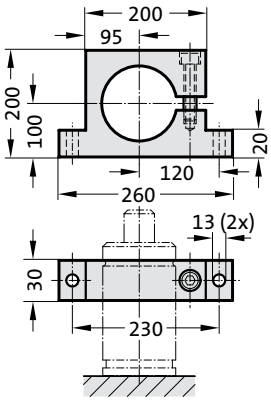


2480.044.03.07500 [2]

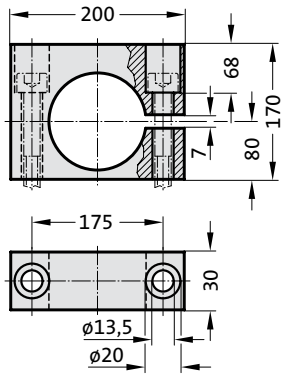


2480.055.07500

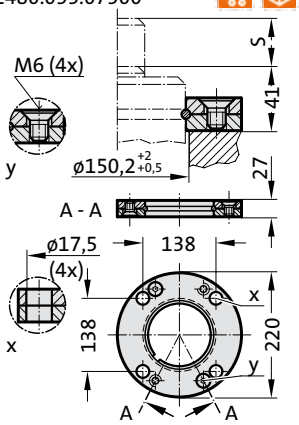


2480.057.07500

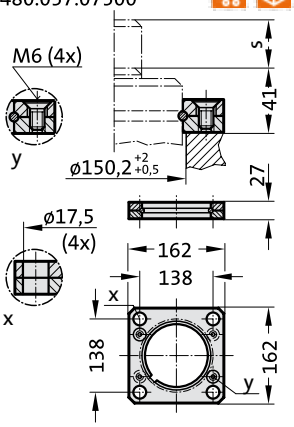


2480.064.07500 [4]

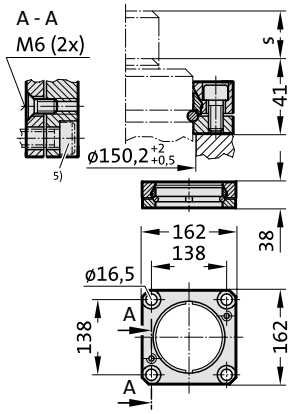


**Note:**

[2] Attention:
The spring force must be absorbed by the stop Surface!

[3] Not for use with composite connection.

[4] Square collar flange, non-rotating, fixing for composite connection.

[5] Machine screws with hexagonal socket (compact head recommended)

# GAS SPRING SPEED CONTROL, CUSHIONED

**Note:**
Initial spring force at 150 bar = 5000 daN

Order No for spare parts kit: 2486.12.05000

Pressure medium: Nitrogen $N_2$
Max. filling pressure: 150 bar
Min. filling pressure: 25 bar
Working temperature: 0°C to +80°C
Temperature related force increase: ± 0.3%/°C
Max. recommended extensions per minute:
approx. 6 to 11 (at 20°C)
Dampening length: ~ 30 mm
Piston rod speed, decelerated: 0.4 m/s

2486.12.05000.

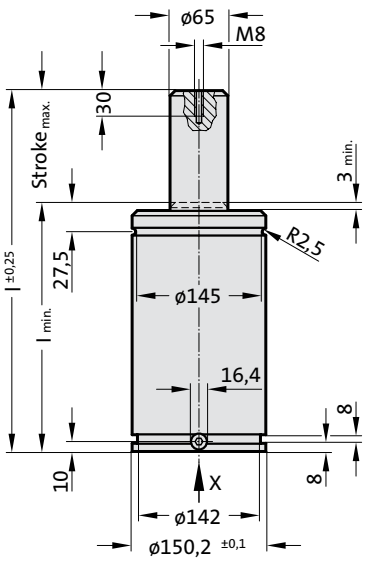


View X - Gas spring

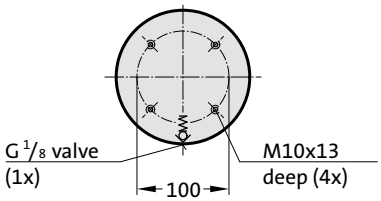

APPROVED PED 2014/68/EU

S>max | V>max | P>max

**2486.12.05000.**

**Gas spring SPEED CONTROL, cushioned**

| Order No | Stroke$_{max.}$ (s) | $l_{min.}$ | l |
|---|---|---|---|
| 2486.12.05000.125 | 125 | 280 | 405 |
| 2486.12.05000.160 | 160 | 315 | 475 |
| 2486.12.05000.200 | 200 | 355 | 555 |
| 2486.12.05000.250 | 250 | 405 | 655 |
| 2486.12.05000.300 | 300 | 455 | 755 |

Initial spring force
versus charge pressure

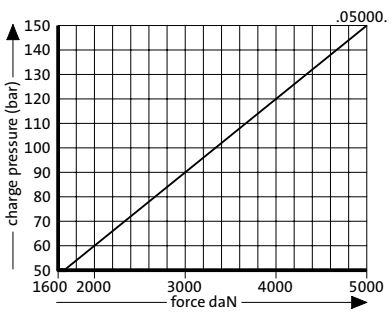


Spring force Diagram displacement versus stroke rise

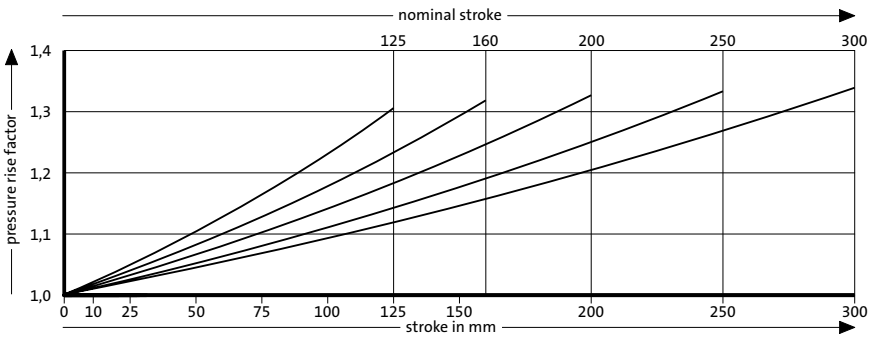


Pressure rise factor accounts for displacement but not external influences!

# GAS SPRINGS DS
# FOR DIE SEPARATION

# GAS SPRINGS DS FOR DIE SEPARATION

## Description

In line of reducing the set-up time while installing the tool in the press there are used autonomous acted gas springs for tool spacing.
While using conventional gas springs they are activated with every press stroke about the whole stroke length.
The new FIBRO gas spring, DS (Die Separation) have been developed especially for tool spacing.
Because of the slow return stroke speed, the gas spring DS does not need the total stroke length.
The FIBRO gas spring, DS minimises unwanted friction in the tool, press and in the gas spring itself.
A further benefit is that they use up to 80% less energy than "conventional" standard gas springs.

## Properties:

- Initial spring forces of 3000 daN to 7500 daN
- Stroke lengths of 50 mm to 300 mm
- Standardised dimensions in accordance with ISO, VDI, CNOMO
- Very slow return stroke speed 0.2 m/min
- Standard safety features (FIBRO Safer Choice)
  - Safety piston rod
  - Excess pressure protection
  - Overtravel protection
- High flexibility during fixing from the top mounting notch and lower fixing groove, together with the tapped bores in the spring base

## Function:

When conventional standard gas springs are used to distance the upper and lower parts of the die, additional initial forces are exerted on each stroke carried out. This force can increase further at the end of the stroke (see diagram 1). When using the "new" DS gas springs in the same application, the force is reduced to less than 10% for each stroke (diagram 2).
The return stroke speed of the gas springs DS is very slow. The duration of the complete return stroke is 1-2 minutes. However, this slow speed has no negative influence on the end position (gas springs fully extended). The piston rod is actuated oscillating up to 10% of the total stroke depending on the production rate.

## Diagrams 1

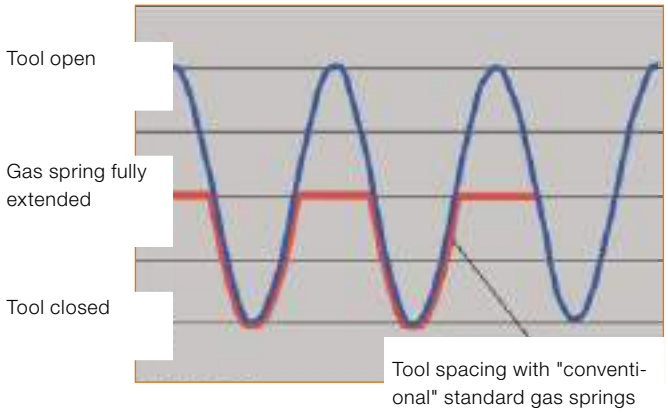


## Diagrams 2

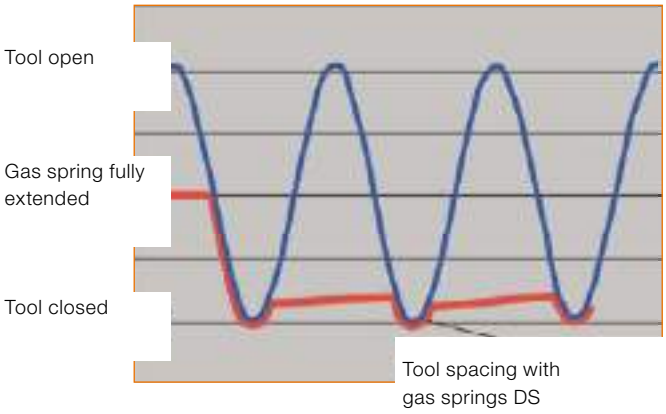

# GAS SPRING DS
# MOUNTING VARIATIONS

2480.007.03000

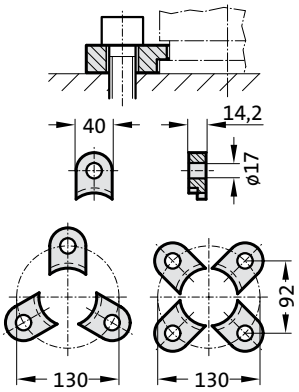


2480.008.03000 [3]

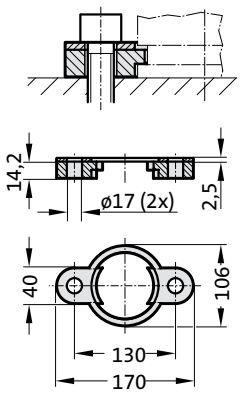


2480.011.03000

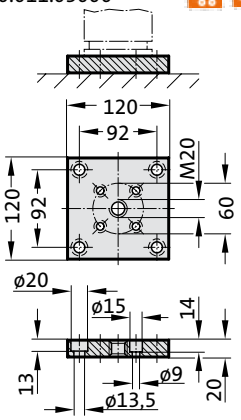


2480.011.03000.2

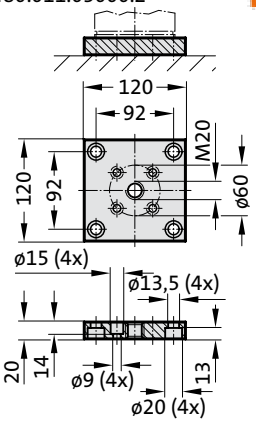


2480.022.03000

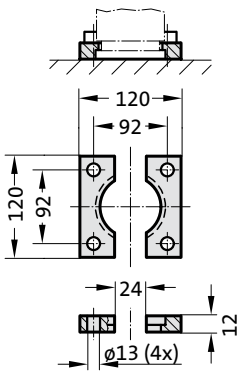


2480.055.03000

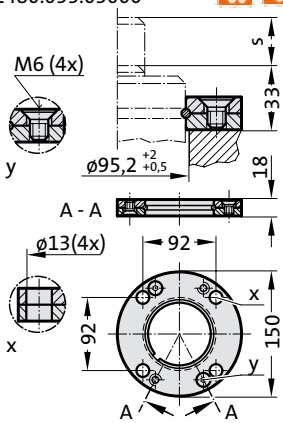


2480.057.03000

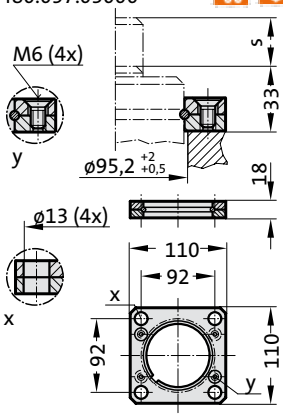


2480.064.03000 [4]

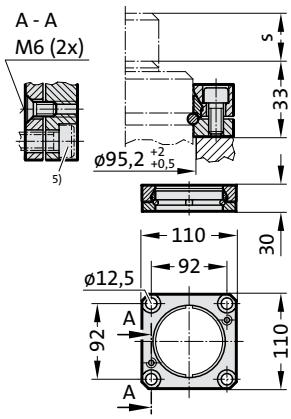


**Note:**

[3] Not for use with composite connection.

[4] Square collar flange, non-rotating, fixing for composite connection.

[5] Machine screws with hexagonal socket (compact head recommended)

# GAS SPRING DS

**Note:**
Initial spring force at 150 bar = 3000 daN

Order No. for spare parts kit: 2486.22.03000

Pressure medium: Nitrogen - $N_2$
Max. filling pressure: 150 bar
Min. filling pressure: 25 bar
Working temperature: 0°C bis +80°C
Temperature related force increase: ± 0.3%/°C
Max. recommended extensions per minute:
approx. 20 to 50 (at 20°C)
Max. piston speed: 1.6 m/s
Max. return stroke speed: 0.2 m/min

## 2486.22.03000.

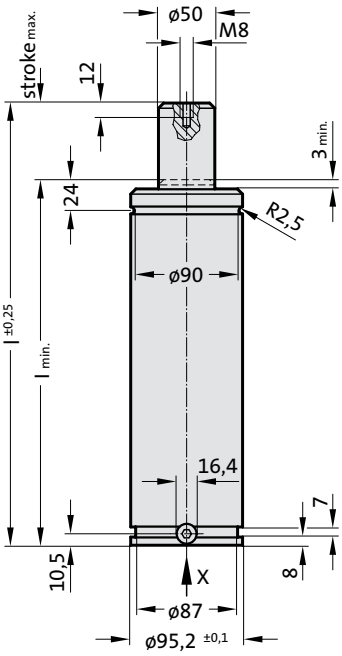


View X - Gas spring

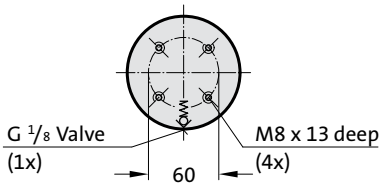

**2486.22.03000.**

**Gas spring DS**

| Order No | Stroke$_{max.}$ (s) | $l_{min.}$ | l |
|---|---|---|---|
| 2486.22.03000.050 | 50 | 170 | 220 |
| 2486.22.03000.063 | 63.5 | 183.5 | 247 |
| 2486.22.03000.080 | 80 | 200 | 280 |
| 2486.22.03000.100 | 100 | 220 | 320 |
| 2486.22.03000.125 | 125 | 245 | 370 |
| 2486.22.03000.160 | 160 | 280 | 440 |
| 2486.22.03000.200 | 200 | 320 | 520 |
| 2486.22.03000.250 | 250 | 370 | 620 |
| 2486.22.03000.300 | 300 | 420 | 720 |

Initial spring force
versus charge pressure

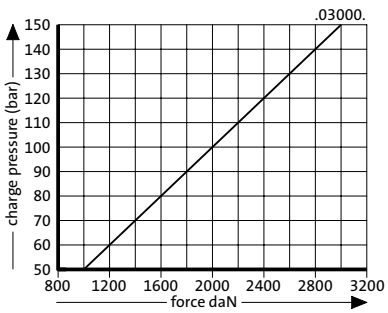


Spring force Diagram displacement versus stroke rise

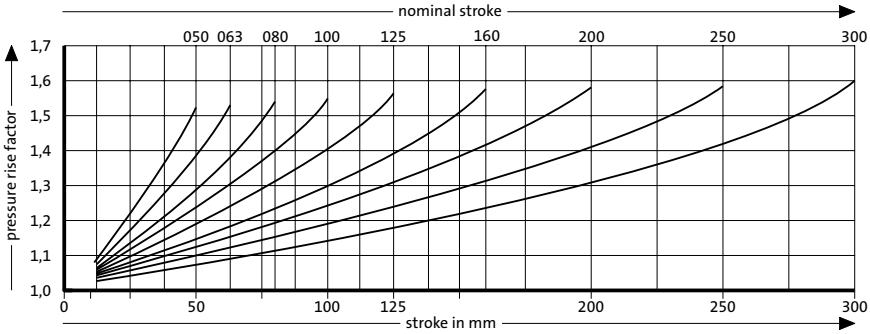


Pressure rise factor accounts for displacement but not external influences!

# GAS SPRING DS
# MOUNTING VARIATIONS

2480.007.05000

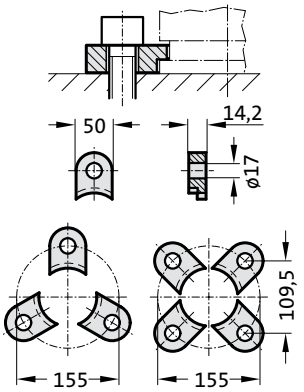


2480.008.05000 [3]

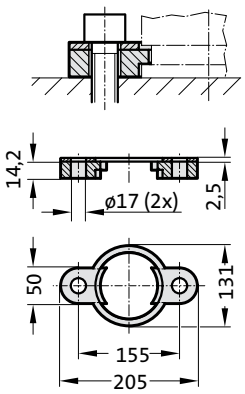


2480.011.05000

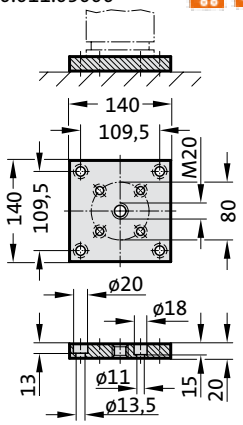


2480.011.05000.2

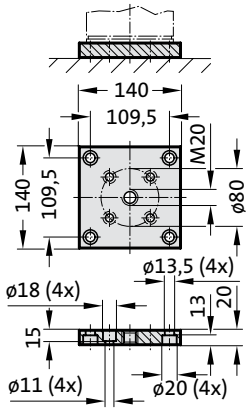


2480.022.05000

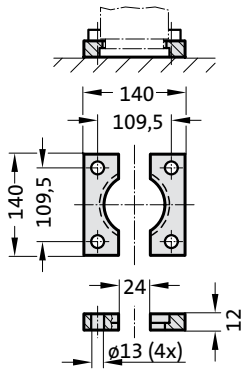


2480.055.05000

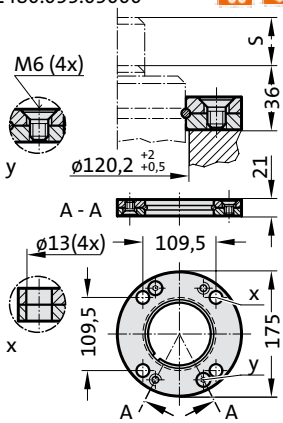


2480.057.05000

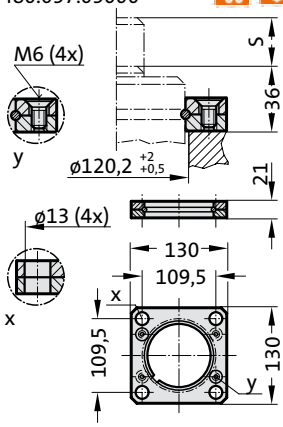


2480.064.05000 [4]

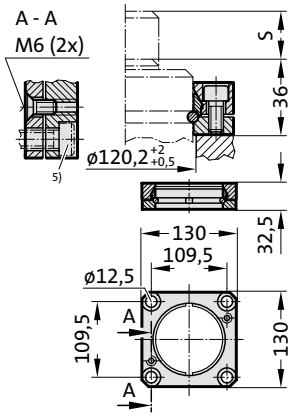


**Note:**

[3] Not for use with composite connection.

[4] Square collar flange, non-rotating, fixing for composite connection.

[5] Machine screws with hexagonal socket (compact head recommended)

# GAS SPRING DS

**Note:**
Initial spring force at 150 bar = 5000 daN

Order No. for spare parts kit: 2486.22.05000

Pressure medium: Nitrogen - $N_2$
Max. filling pressure: 150 bar
Min. filling pressure: 25 bar
Working temperature: 0°C bis +80°C
Temperature related force increase: ± 0.3%/°C
Max. recommended extensions per minute:
approx. 20 to 50 (at 20°C)
Max. piston speed: 1.6 m/s
Max. return stroke speed: 0.2 m/min

## 2486.22.05000.

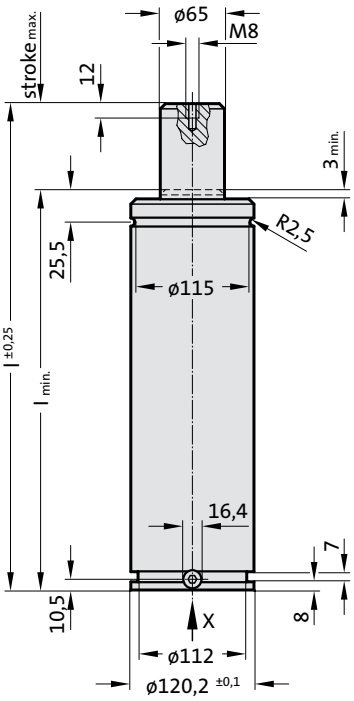


View X - Gas spring

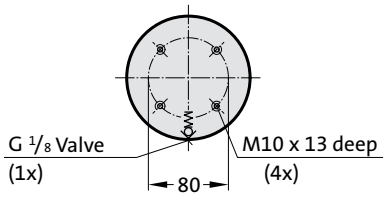

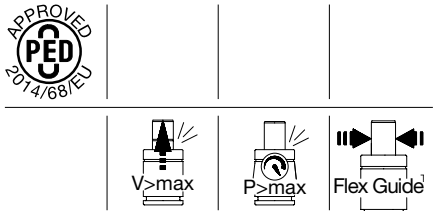


**2486.22.05000.**

**Gas spring DS**

| Order No | Stroke$_{max.}$ (s) | $l_{min.}$ | l |
|---|---|---|---|
| 2486.22.05000.050 | 50 | 190 | 240 |
| 2486.22.05000.063 | 63.5 | 203.5 | 267 |
| 2486.22.05000.080 | 80 | 220 | 300 |
| 2486.22.05000.100 | 100 | 240 | 340 |
| 2486.22.05000.125 | 125 | 265 | 390 |
| 2486.22.05000.160 | 160 | 300 | 460 |
| 2486.22.05000.200 | 200 | 340 | 540 |
| 2486.22.05000.250 | 250 | 390 | 640 |
| 2486.22.05000.300 | 300 | 440 | 740 |

Initial spring force
versus charge pressure

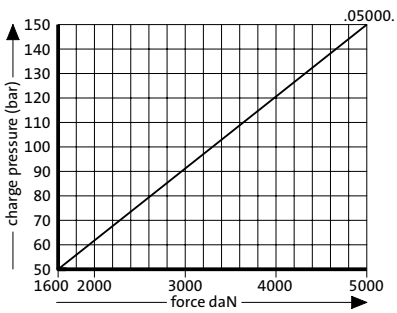


Spring force Diagram displacement versus stroke rise

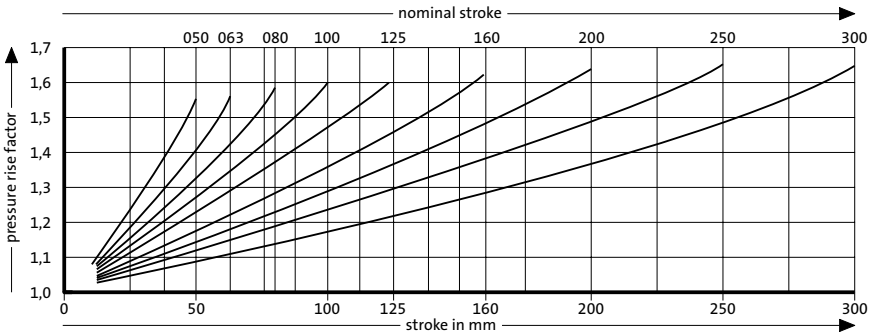


Pressure rise factor accounts for displacement but not external influences!

# GAS SPRING DS
# MOUNTING VARIATIONS

2480.007.07500

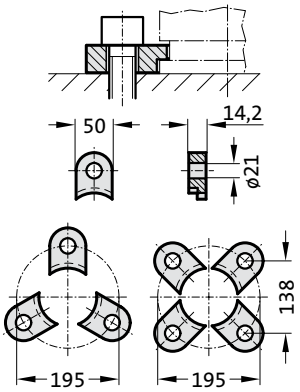


2480.008.07500 [3]

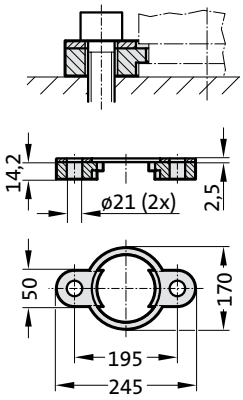


2480.011.07500

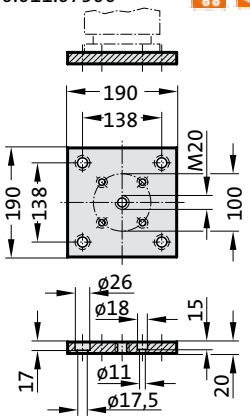


2480.011.07500.2

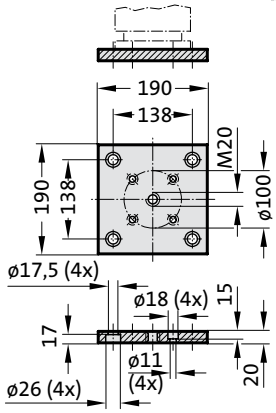


2480.011.03.07500

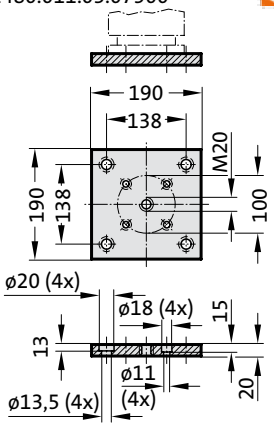


2480.011.03.07500.2

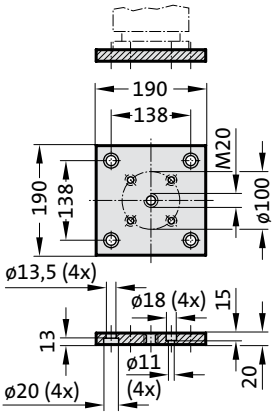


2480.022.07500

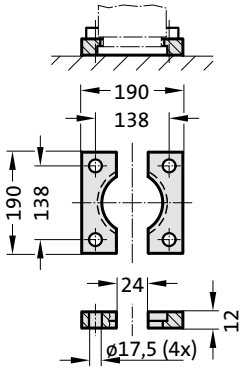


2480.055.07500

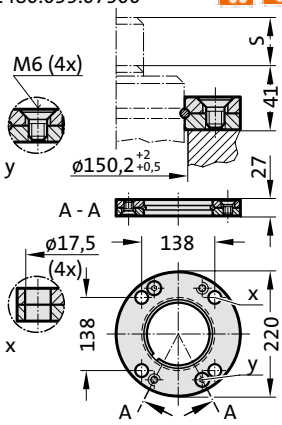


2480.057.07500

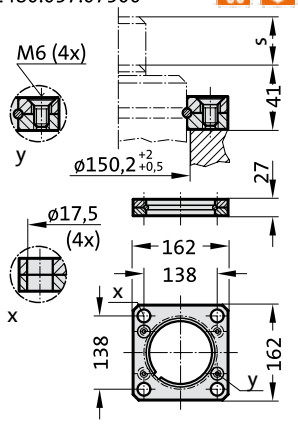


2480.064.07500 [4]

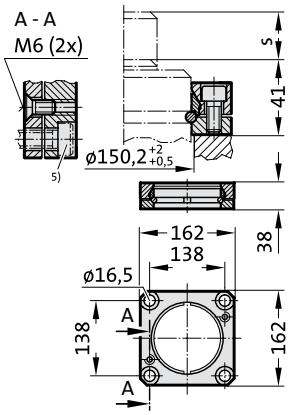


**Note:**

[3] Not for use with composite connection.

[4] Square collar flange, non-rotating, fixing for composite connection.

[5] Machine screws with hexagonal socket (compact head recommended)

# GAS SPRING DS

**Note:**
Initial spring force at 150 bar = 7500 daN

Order No. for spare parts kit: 2486.22.07500

Pressure medium: Nitrogen - $N_2$
Max. filling pressure: 150 bar
Min. filling pressure: 25 bar
Working temperature: 0°C bis +80°C
Temperature related force increase: ± 0.3%/°C
Max. recommended extensions per minute:
approx. 20 to 50 (at 20°C)
Max. piston speed: 1.6 m/s
Max. return stroke speed: 0.2 m/min

## 2486.22.07500.

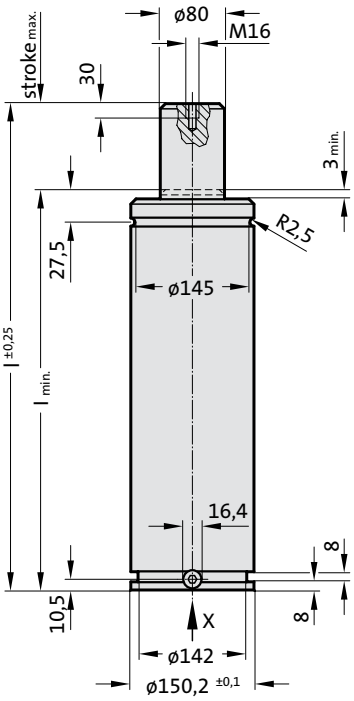


View X - Gas spring

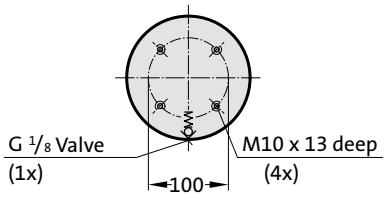

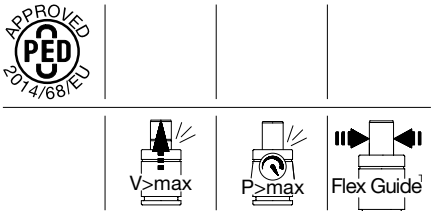


**2486.22.07500.**

**Gas spring DS**

| Order No | Stroke$_{max.}$ (s) | $l_{min.}$ | l |
|---|---|---|---|
| 2486.22.07500.050 | 50 | 205 | 255 |
| 2486.22.07500.063 | 63.5 | 218.5 | 282 |
| 2486.22.07500.080 | 80 | 235 | 315 |
| 2486.22.07500.100 | 100 | 255 | 355 |
| 2486.22.07500.125 | 125 | 280 | 405 |
| 2486.22.07500.160 | 160 | 315 | 475 |
| 2486.22.07500.200 | 200 | 355 | 555 |
| 2486.22.07500.250 | 250 | 405 | 655 |
| 2486.22.07500.300 | 300 | 455 | 755 |

Initial spring force
versus charge pressure

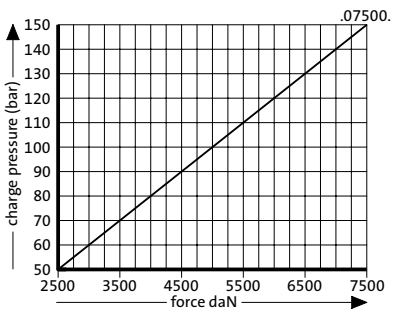


Spring force Diagram displacement versus stroke rise

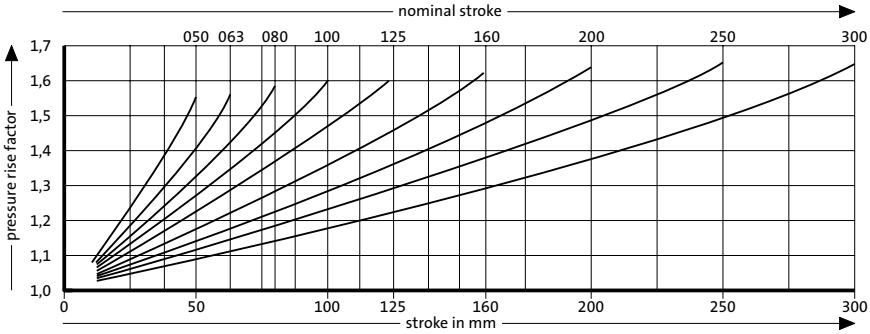


Pressure rise factor accounts for displacement but not external influences!

# GAS SPRINGS WITH FASTENING TO FORD STANDARD WDX

**Please request your catalogue**

# GAS SPRINGS WITH THREAD

# GAS SPRING WITH EXTERNAL THREAD
# MOUNTING VARIATIONS

2480.005.00200.
Slotted nut

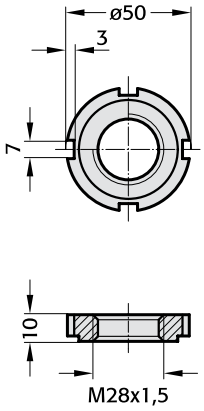


**Mounting examples:**

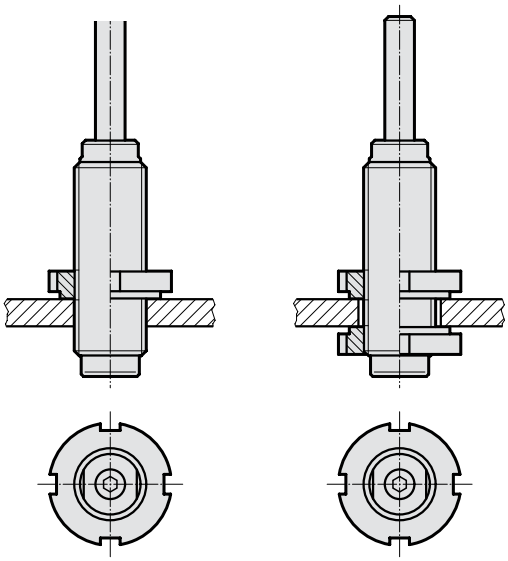

# GAS SPRING WITH EXTERNAL THREAD

**Description:**
The gas springs are colour-coded according to the spring force rating ranges 50–100–150–200 daN.

All springs, regardless of their spring force ratings, are of the same design. The differing force ratings result exclusively from the differing charge pressures.
Do take into consideration the colour-coded pressure rating during repair work and recharging.

**Note:**
Order No for spare parts kit: 2480.21.00150

Pressure medium: Nitrogen $N_2$
Max. filling pressure: 180 bar
Min. filling pressure: 25 bar
Working temperature: 0°C to +80°C
Temperature related force increase: ± 0.3%/°C
Max. recommended extensions per minute: approx. 80 to 100 (at 20°C)
Max. piston speed: 1.6 m/s

Spring forces as per spring diagram.

Upon customers request, also available unfilled, Order No 2482.32.00000...., Colour: black

2480.32.

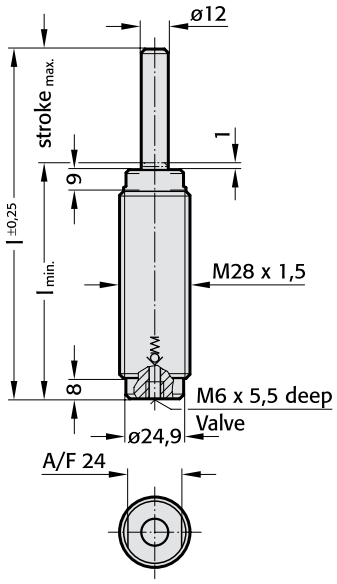

APPROVED PED 2014/68/EU

### 2480.32. Gas spring with external thread

| Order No* | $Stroke_{max.}$ | l | $l_{min.}$ |
|---|---|---|---|
| 2480.32.□□□□□.010 | 10 | 62 | 52 |
| 2480.32.□□□□□.013 | 12.7 | 67.4 | 54.7 |
| 2480.32.□□□□□.016 | 16 | 74 | 58 |
| 2480.32.□□□□□.025 | 25 | 92 | 67 |
| 2480.32.□□□□□.038 | 38.1 | 118.2 | 80.1 |
| 2480.32.□□□□□.050 | 50 | 142 | 92 |
| 2480.32.□□□□□.063 | 63.5 | 169 | 105.5 |
| 2480.32.□□□□□.080 | 80 | 202 | 122 |
| 2480.32.□□□□□.100 | 100 | 242 | 142 |
| 2480.32.□□□□□.125 | 125 | 292 | 167 |

*complete with initial spring force
Spring force marking:
Initial spring force [daN] - Pressure [bar] - Colour:
.00050. - 45 - green
.00100. - 90 - blue
.00150. - 135 - red
.00200. - 180 - yellow

Initial spring force versus charge pressure

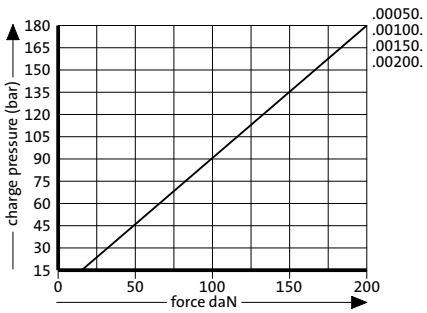


Spring force Diagram displacement versus stroke rise

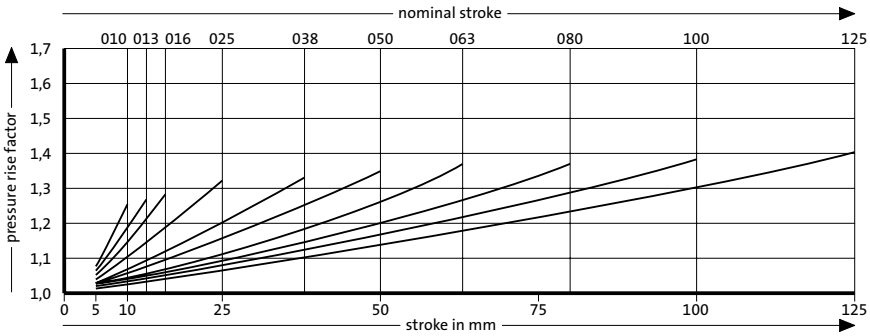


Pressure rise factor accounts for displacement but not external influences!

# GAS SPRING WITH EXTERNAL THREAD
# MOUNTING VARIATIONS

## 2480.005.00250.
Slotted nut

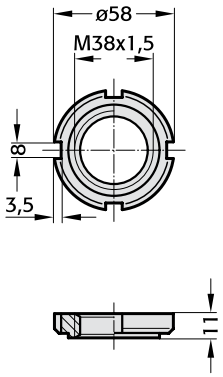


## 2480.006.00250.
Clamped flange

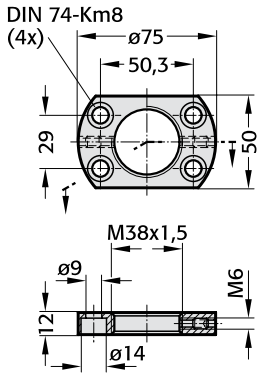


**2480.00.51.01**

Box spanner for assembling/disassembling of gas springs

**Mounting examples:**

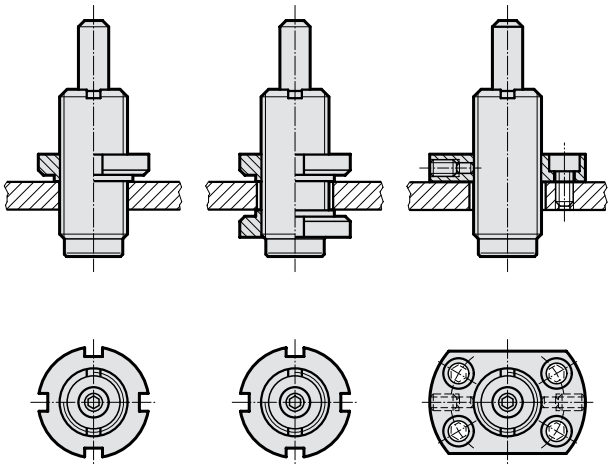

# GAS SPRING WITH EXTERNAL THREAD

**Note:**
Initial spring force at 150 bar = 250 daN

Order No for spare parts kit: 2480.12.00250

Pressure medium: Nitrogen $N_2$
Max. filling pressure: 150 bar
Min. filling pressure: 50 bar
Working temperature: 0°C to +80°C
Temperature related force increase: ± 0.3%/°C
Max. recommended extensions per minute:
approx. 80 to 100 (at 20°C)
Max. piston speed: 1.6 m/s

**Fixing:**
Installation with ring nut(s) 2480.005.00250 can be done with one or two ring nuts. If the hole in the bolster plate is not threaded, two ring nuts are needed. Holes threaded M 38 × 1,5 require one only ring nut for mounting of the gas springs.
Mounting with a threaded flange plate has the advantage of a degree of adjustability as far as the flange screws permit, moreover it is often found easier to make do with a clearance hole in the tool plate. Locking is by way of two lock screws with thrust plugs, provided in the threaded flange.
Diameter of through-hole in tool plate = 38 mm – plus four tapped holes M 8.

2480.32.00250.

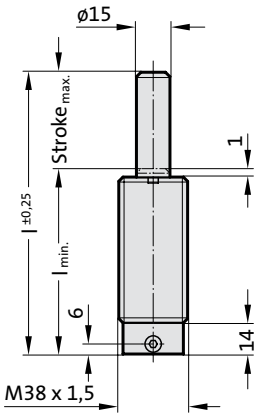


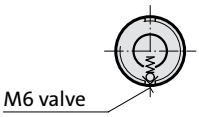

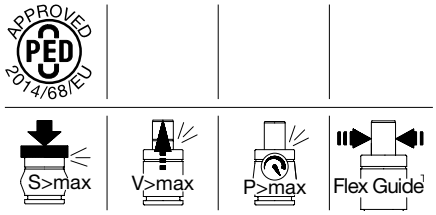


**2480.32.00250.**

**Gas spring with external thread**

| Order No | Stroke$_{max.}$ (s) | $l_{min.}$ | l |
|---|---|---|---|
| 2480.32.00250.013 | 12.7 | 62.7 | 75.4 |
| 2480.32.00250.025 | 25 | 75 | 100 |
| 2480.32.00250.038 | 38.1 | 88.1 | 126.2 |
| 2480.32.00250.050 | 50 | 100 | 150 |
| 2480.32.00250.063 | 63.5 | 113.5 | 177 |
| 2480.32.00250.080 | 80 | 130 | 210 |
| 2480.32.00250.100 | 100 | 150 | 250 |

Initial spring force
versus charge pressure

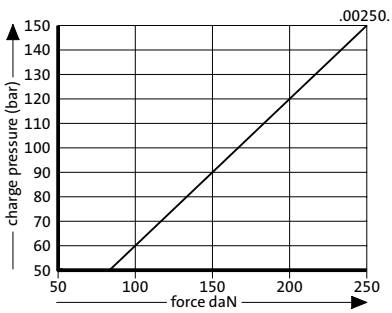


Spring force Diagram displacement versus stroke rise

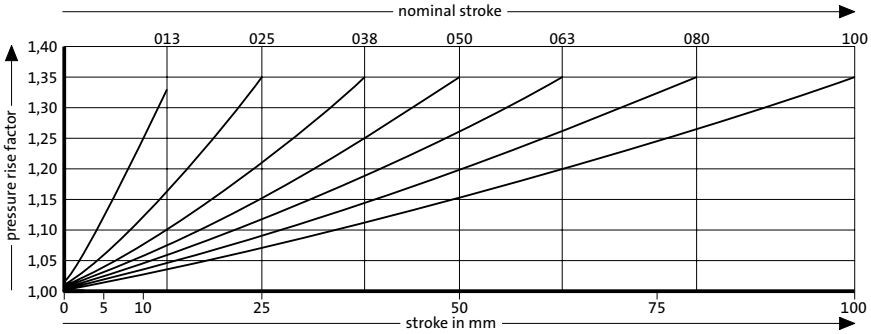


Pressure rise factor accounts for displacement but not external influences!

# GAS SPRING WITH MALE FIXING THREAD, SMALL MOUNTING HEIGHT
# MOUNTING VARIATIONS

**2480.00.51.01**

Box spanner for assembling/disassembling of gas springs

**Mounting examples:**

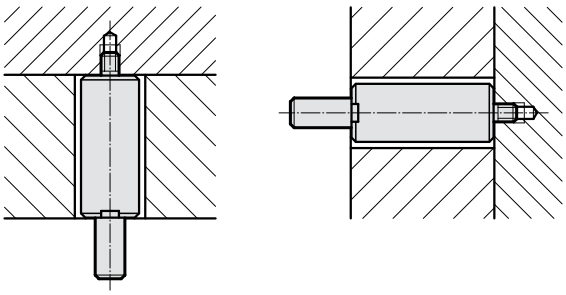

# GAS SPRING WITH MALE FIXING THREAD, SMALL MOUNTING HEIGHT

**Note:**
Initial spring force at 150 bar = 250 daN

Order No for spare parts kit: 2480.12.00250

Pressure medium: Nitrogen $N_2$
Max. filling pressure: 150 bar
Min. filling pressure: 50 bar
Working temperature: 0°C to +80°C
Temperature related force increase: ± 0.3%/°C
Max. recommended extensions per minute:
approx. 80 to 100 (at 20°C)
Max. piston speed: 1.6 m/s

2480.82.00250.

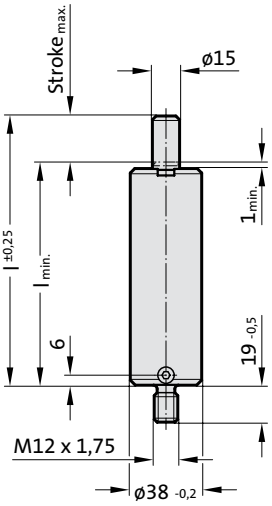


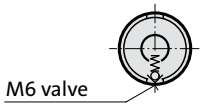

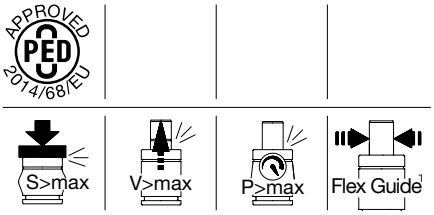


**2480.82.00250.**

**Gas spring with male fixing thread, small mounting height**

| Order No | Stroke$_{max.}$ (s) | $l_{min.}$ | l |
|---|---|---|---|
| 2480.82.00250.013 | 12.7 | 62.7 | 75.4 |
| 2480.82.00250.025 | 25 | 75 | 100 |
| 2480.82.00250.038 | 38.1 | 88.1 | 126.2 |
| 2480.82.00250.050 | 50 | 100 | 150 |
| 2480.82.00250.063 | 63.5 | 113.5 | 177 |
| 2480.82.00250.080 | 80 | 130 | 210 |
| 2480.82.00250.100 | 100 | 150 | 250 |

Initial spring force
versus charge pressure

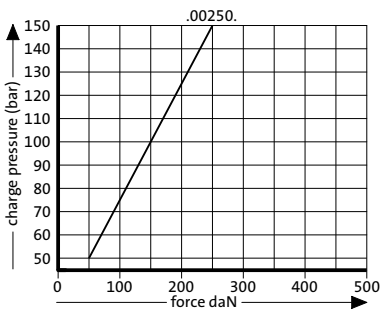


Spring force Diagram displacement versus stroke rise

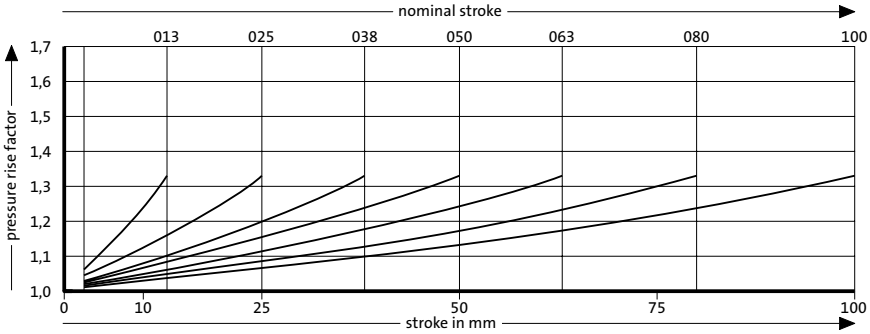


Pressure rise factor accounts for displacement but not external influences!

# GAS SPRING WITH MALE FIXING THREAD, POWERLINE
# MOUNTING VARIATIONS

**2480.00.51.05**

Box spanner for assembling/disassembling of gas springs

**Mounting examples:**

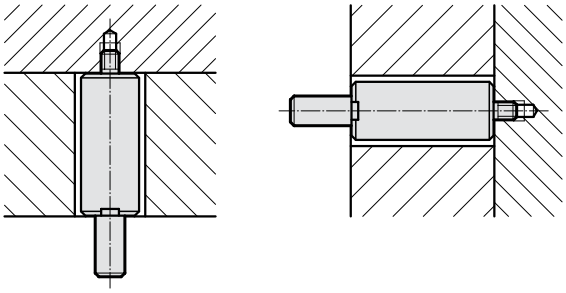

# GAS SPRING WITH MALE FIXING THREAD, POWERLINE

**Note:**
Initial spring force at 150 bar = 920 daN

Order No for spare parts kit: 2487.12.01000

Pressure medium: Nitrogen $N_2$
Max. filling pressure: 150 bar
Min. filling pressure: 25 bar
Working temperature: 0°C to +80°C
Temperature related force increase: ± 0.3%/°C
Max. recommended extensions per minute:
approx. 50 to 100 (at 20°C)
Max. piston speed: 1.6 m/s

2487.82.01000.

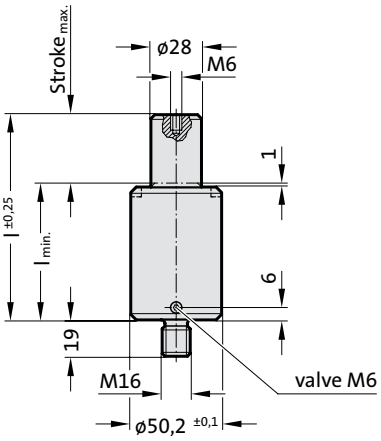


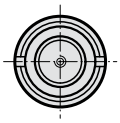

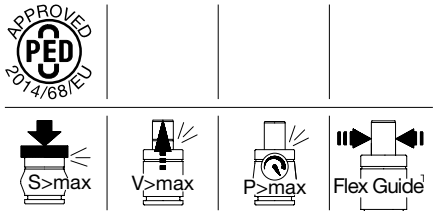


**2487.82.01000.**

**Gas spring with male fixing thread, POWERLINE**

| Order No | Stroke$_{max.}$ (s) | $l_{min.}$ | l |
|---|---|---|---|
| 2487.82.01000.013 | 13 | 51 | 64 |
| 2487.82.01000.016 | 16 | 54 | 70 |
| 2487.82.01000.019 | 19 | 57 | 76 |
| 2487.82.01000.025 | 25 | 63 | 88 |
| 2487.82.01000.032 | 32 | 70 | 102 |
| 2487.82.01000.038 | 38 | 76 | 114 |
| 2487.82.01000.050 | 50 | 88 | 138 |
| 2487.82.01000.063 | 63 | 101 | 164 |
| 2487.82.01000.075 | 75 | 113 | 188 |
| 2487.82.01000.080 | 80 | 118 | 198 |
| 2487.82.01000.100 | 100 | 138 | 238 |
| 2487.82.01000.125 | 125 | 163 | 288 |

Initial spring force
versus charge pressure

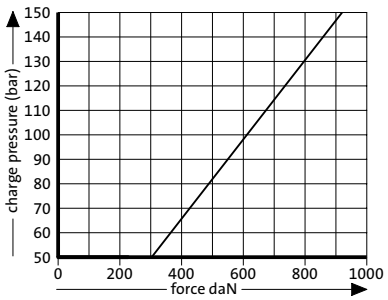


Spring force Diagram displacement versus stroke rise

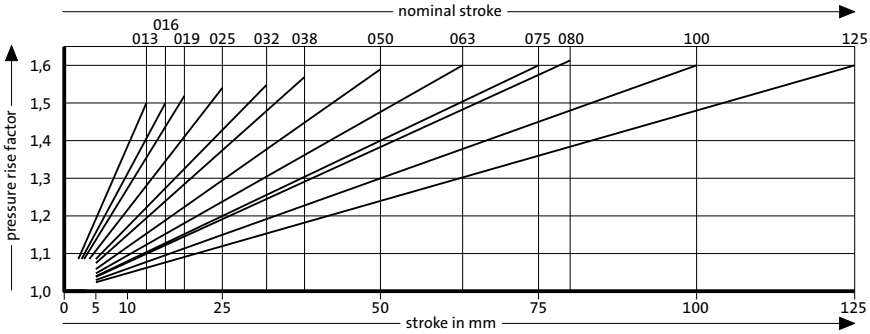


Pressure rise factor accounts for displacement but not external influences!

# GAS SPRING WITH HEXAGONAL FLANGE

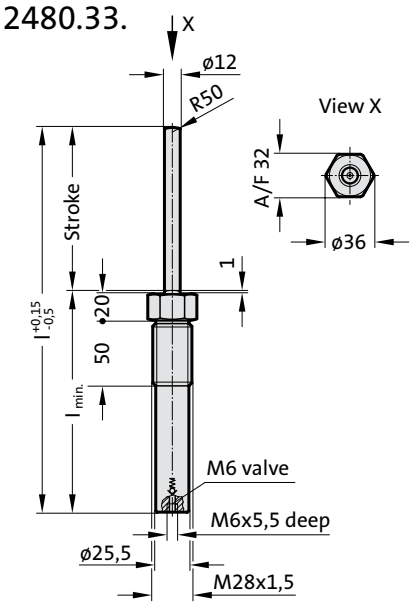


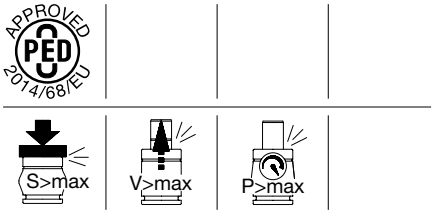


**Description:**
The gas springs are colour-coded according to the spring force rating ranges 15–50–100–150–200 daN.

All springs, regardless of their spring force ratings, are of the same design. The differing force ratings result exclusively from the differing charge pressures.
Do take into consideration the colour-coded pressure rating during repair work and recharging.

**Note:**
Other stroke lengths avail on request! See gas spring 2480.32.

Order No for spare parts kit: 2480.21.00150

Pressure medium: Nitrogen $N_2$
Max. filling pressure: 180 bar
Min. filling pressure: 13 bar
Working temperature: 0°C to +80°C
Temperature related force increase: ± 0.3%/°C
Max. recommended extensions per minute: approx. 80 to 100 (at 20°C)
Max. piston speed: 1.6 m/s

### 2480.33. Gas spring with hexagonal flange

| Order No | $Stroke_{max.}$ (s) | $l_{min.}$ | l | Spring force [daN] initial | Colour |
|---|---|---|---|---|---|
| 2480.33.00015.125 | 125 | 167 | 292 | 15 | black |
| 2480.33.00050.125 | 125 | 167 | 292 | 50 | green |
| 2480.33.00100.125 | 125 | 167 | 292 | 100 | blue |
| 2480.33.00150.125 | 125 | 167 | 292 | 150 | red |
| 2480.33.00200.125 | 125 | 167 | 292 | 200 | yellow |

Initial spring force
versus charge pressure

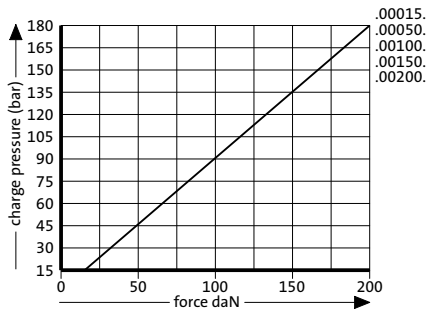


Spring force Diagram displacement versus stroke rise

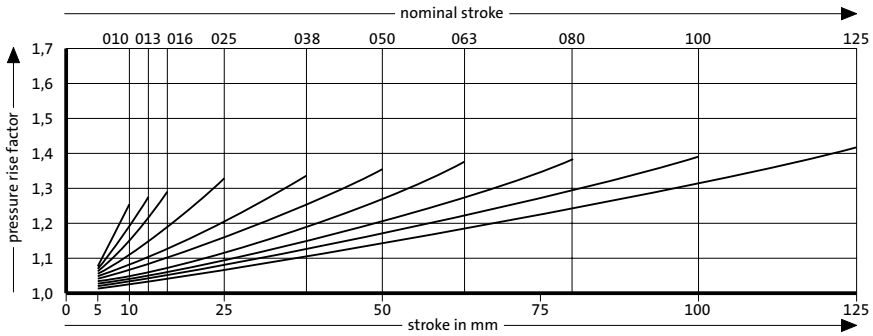


Pressure rise factor accounts for displacement but not external influences!

# GAS SPRINGS FOR WORKING TEMPERATURES UP TO 120 ° C

# GAS SPRINGS *LCF, DAMPED

* LCF Force Manager is a warning sign of Associated Spring

# GAS SPRINGS *LCF, DAMPED

APPROVED PED 2014/68/EU

**Description:**

The LCF series represents a whole new generation of nitrogen-filled gas springs developed to meet the needs of the machine tool and press-making industries.

Negative factors such as
- high impact stresses
- excessive noise
- extreme bounce off the pad

are all minimised by LCF springs.

Characteristics such as
- dimensions
- fixing methods
- filling with gas and purging
- working in interconnected systems

are identical to those for standard ISO or type 2480.13. gas springs.

The springs from the LCF series reduce impact stresses by 50% compared to conventional gas springs.
The force builds up gradually and acceleration is uniform, reducing wear on both tool and press. As a result, less maintenance is required.

LCF springs are at least 20% quieter than standard gas springs.
The reduced noise level is due to the lower impact force, making these springs a cost-effective alternative to soundproofing panels.
They are thus more economical and environmentally-friendly.

The LCF springs reduce the extreme bounce off the pad during the return stroke, thus lessening vibration on the workpiece and allowing the workpiece to be transported more effectively.
Since the spring travel is damped, the pad motion is more uniform, so in many cases the press stroke rate and thus productivity can be increased.

* LCF Force Manager is a warning sign of Associated Spring

# GAS SPRINGS *LCF, DAMPED

### 2484.13. Force diagram for gas springs LCF

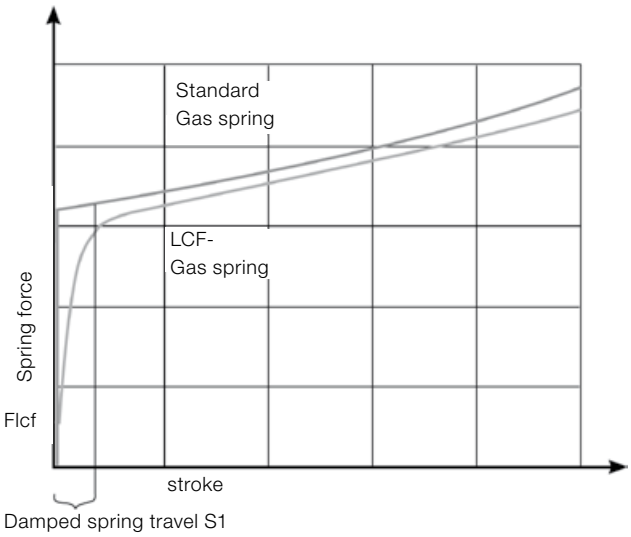


With the springs from the LCF series, the force builds up gradually and acceleration is uniform.

### Measured dynamic piston force, Measured values for the 5000 series

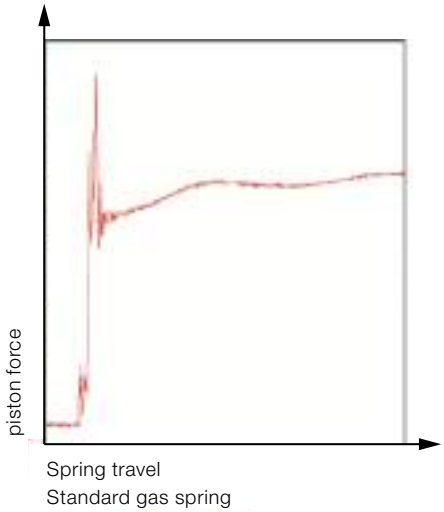


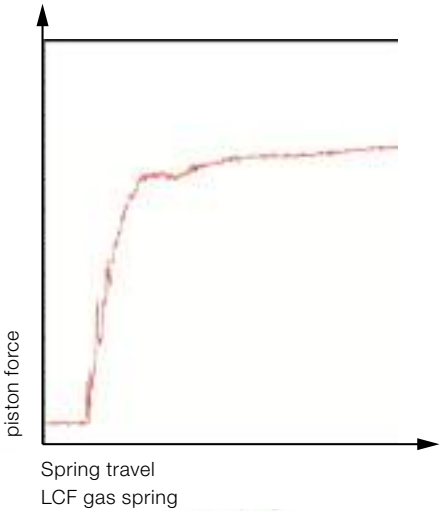


### Comparative press load diagram

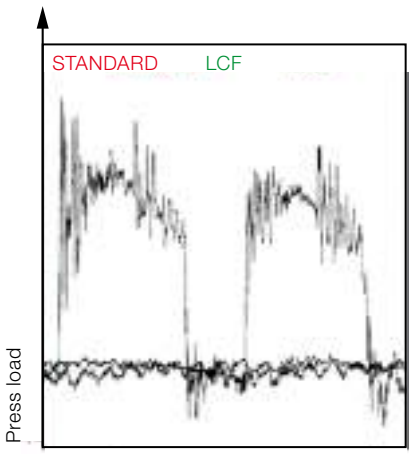


### Noise reduction

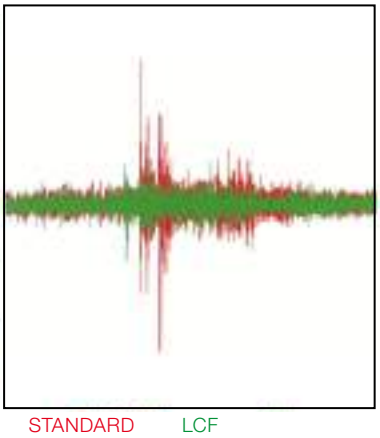


The springs from the LCF series are quieter due to the reduced impact force.

### 2484.13. Force diagram for gas springs LCF

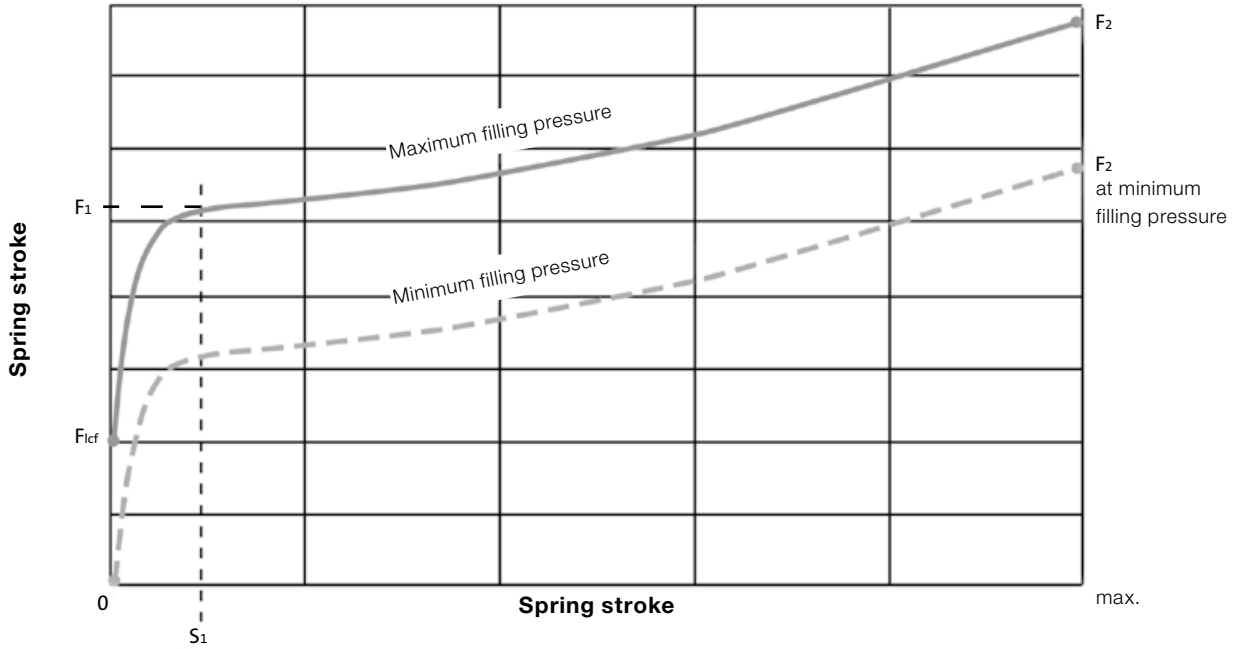


**Note:** Maximum pressure for LCF gas springs: 150 bar.
Observe the minimum filling pressure!

### Guidelines for the use of LCF gas springs

1. After the damped spring travel ($S_1$) the LCF gas spring achieves the same initial spring force ($F_1$) and pressure build up as the standard gas spring (to ISO).
2. The spring force ($F_{lcf}$) should exceed the weight (e.g. the pad) by at least 15% so that it is held in the correct position (this does not apply in the case of minimum filling pressure).

| Spring size | $F_{lcf}$ at 150 bar [daN] | Damped spring travel $S_1$ | Minimum filling pressure [bar] |
|---|---|---|---|
| 2484.13.00750. | 470 | 3,1 | 70 |
| 2484.12.01500. | 700 | 4,6 | 105 |
| 2484.13.03000. | 1600 | 3,8 | 69 |
| 2484.13.05000. | 2500 | 7,7 | 76 |
| 2484.13.07500. | 3000 | 10,4 | 90 |

# LCF GAS SPRING, DAMPED
# MOUNTING VARIATIONS

2480.007.00750

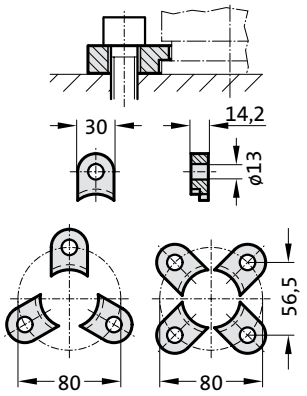


2480.008.00750 [3]

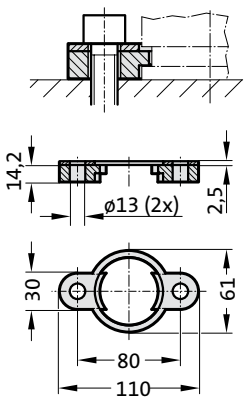


2480.010.00750.115 [3]
2480.010.00750.190* [3]

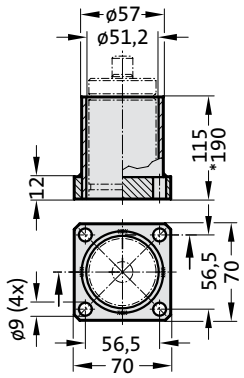


2480.011.00750

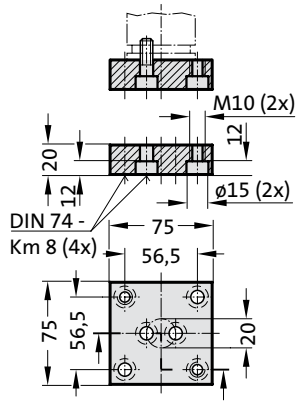


2480.011.00750.1

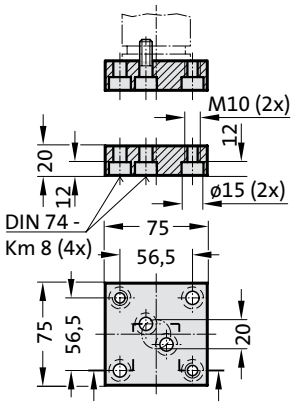


2480.011.00750.3

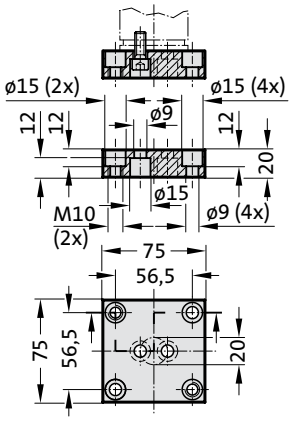


2480.022.00750

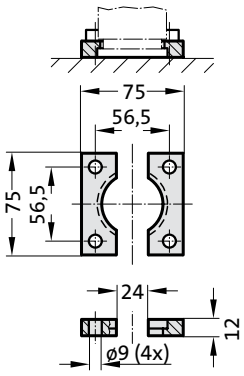


2480.044.00750 [2]

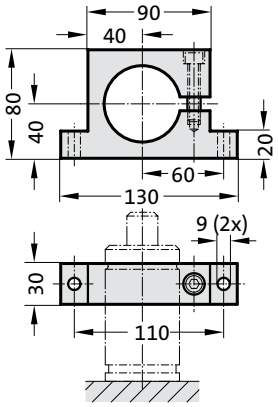


2480.044.03.00750 [2]

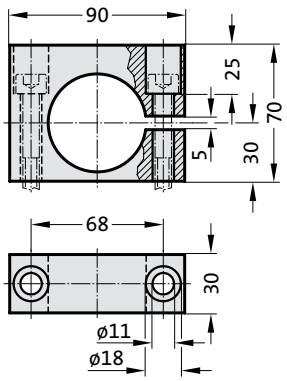


2480.045.00750 [2]

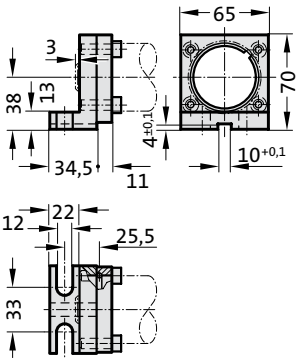


2480.047.00750 [2]

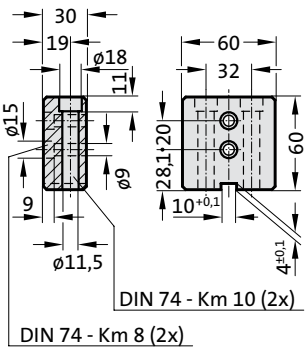


2480.055.00750

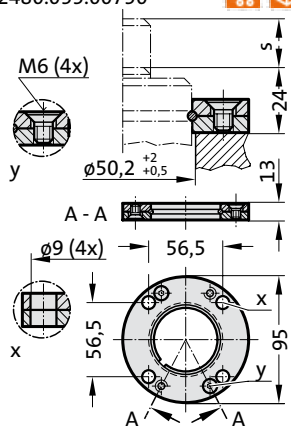


2480.057.00750

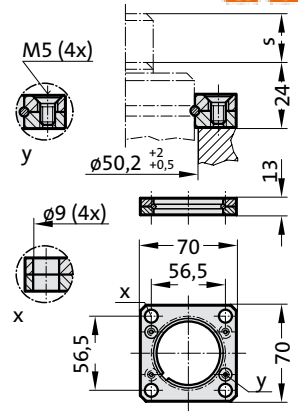


2480.064.00750 [4]

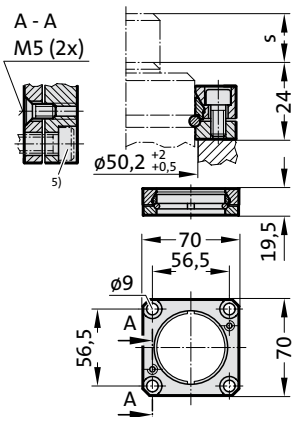


**Note:**

[2] Attention:
The spring force must be absorbed by the stop Surface!

[3] Not for use with composite connection.

[4] Square collar flange, non-rotating, fixing for composite connection.

[5] Machine screws with hexagonal socket (compact head recommended)

# LCF GAS SPRING, DAMPED

**Note:**
Initial spring force $F_{lcf}$ at 150 bar = 470 daN
Full spring force after 3.1 mm damped spring travel

Order No for spare parts kit: 2484.13.00750

Gas spring without valve
Order No (example): 2484.13.00750. .P

Pressure medium: Nitrogen $N_2$
Max. filling pressure: 150 bar
Min. filling pressure: 70 bar
Working temperature: 0°C to +80°C
Temperature related force increase: ± 0.3%/°C
Max. recommended extensions per minute: approx. 15 to 40 (at 20°C)
Max. piston speed: 1.6 m/s

## 2484.13.00750.

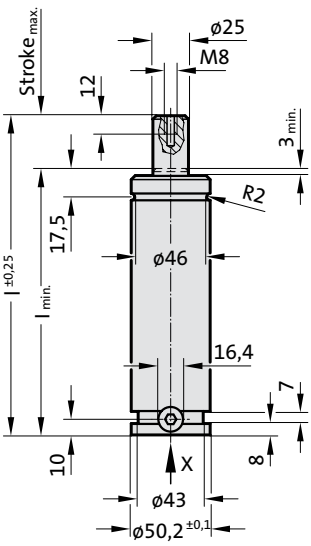

APPROVED PED 2014/68/EU

S>max | V>max | P>max

**2484.13.00750.**

**LCF Gas Spring, damped**

View X - Gas spring

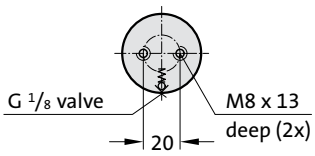


| Order No | Stroke$_{max.}$ (s) | $l_{min.}$ | l |
|---|---|---|---|
| 2484.13.00750.013 | 12.7 | 107.7 | 120.4 |
| 2484.13.00750.025 | 25 | 120 | 145 |
| 2484.13.00750.038 | 38.1 | 133.1 | 171.2 |
| 2484.13.00750.050 | 50 | 145 | 195 |
| 2484.13.00750.063 | 63.5 | 158.5 | 222 |
| 2484.13.00750.080 | 80 | 175 | 255 |
| 2484.13.00750.100 | 100 | 195 | 295 |
| 2484.13.00750.125 | 125 | 220 | 345 |
| 2484.13.00750.160 | 160 | 255 | 415 |
| 2484.13.00750.200 | 200 | 295 | 495 |
| 2484.13.00750.250 | 250 | 345 | 595 |
| 2484.13.00750.300 | 300 | 395 | 695 |

Initial spring force
versus charge pressure

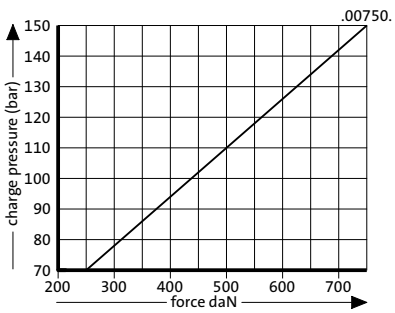


Spring force Diagram displacement versus stroke rise

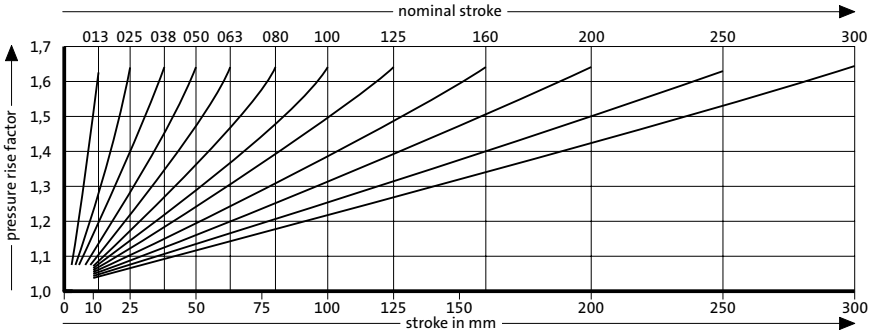


Pressure rise factor accounts for displacement but not external influences!

# LCF GAS SPRING, DAMPED
# MOUNTING VARIATIONS

2480.007.01500

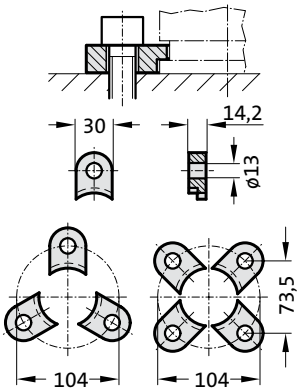


2480.008.01500 [3]

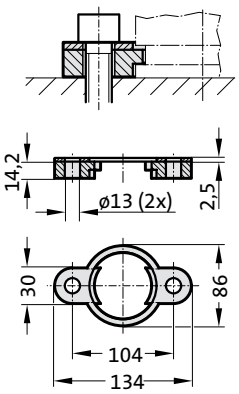


2480.010.01500.130 [3]
2480.010.01500.205* [3]

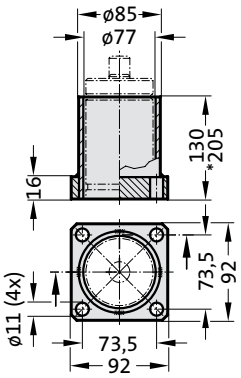


2480.011.01500

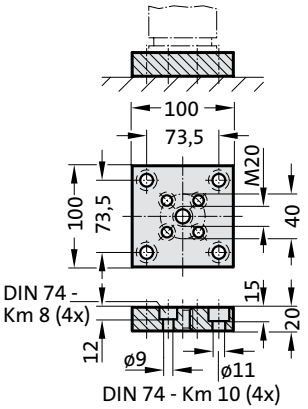


2480.011.01500.2

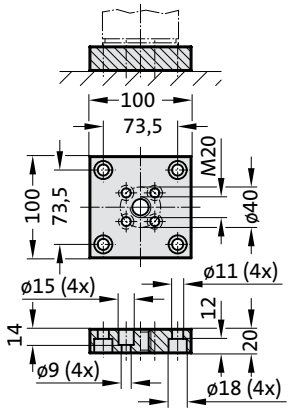


2480.022.01500

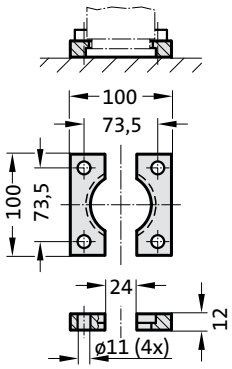


2480.044.01500 [2]

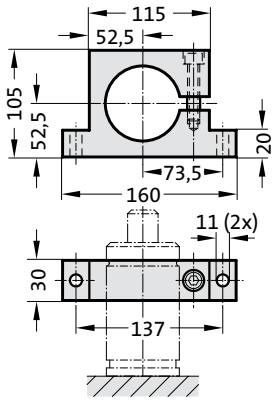


2480.044.03.01500 [2]

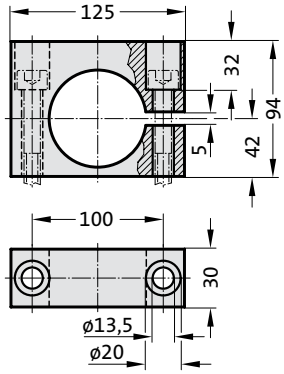


2480.045.01500 [2]

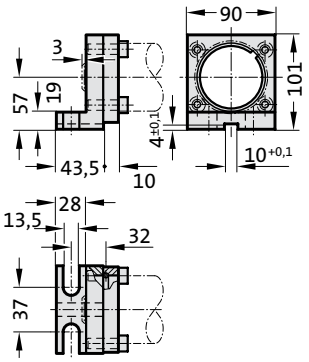


2480.047.01500 [2]

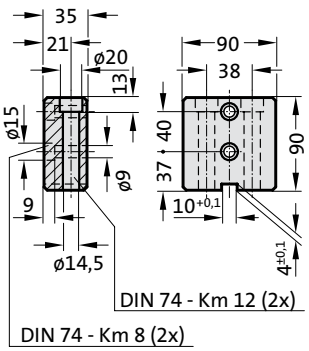


2480.055.01500

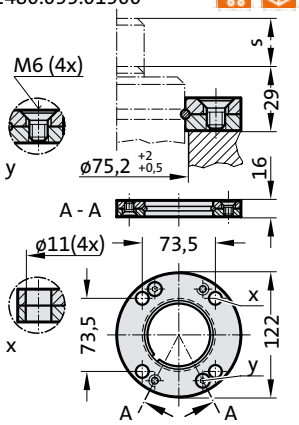


2480.057.01500

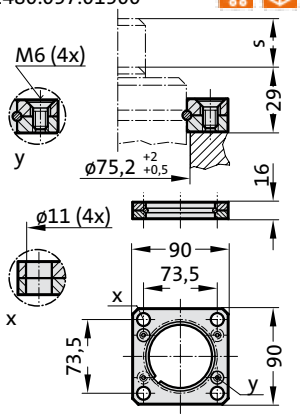


2480.064.01500 [4]

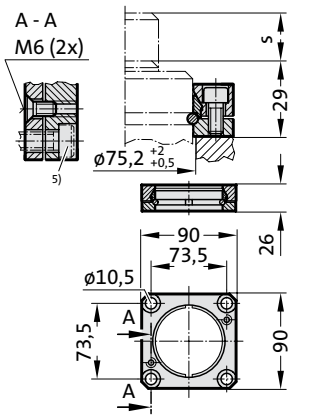


**Note:**

[2] Attention:
The spring force must be absorbed by the stop Surface!

[3] Not for use with composite connection.

[4] Square collar flange, non-rotating, fixing for composite connection.

[5] Machine screws with hexagonal socket (compact head recommended)

# LCF GAS SPRING, DAMPED

**Note:**
Initial spring force $F_{lcf}$ at 150 bar = 700 daN
Full spring force after 4.6 mm damped spring travel

Order No for spare parts kit: 2484.12.01500

Gas spring without valve
Order No (example): 2484.12.01500. .P

Pressure medium: Nitrogen $N_2$
Max. filling pressure: 150 bar
Min. filling pressure: 105 bar
Working temperature: 0°C to +80°C
Temperature related force increase: ± 0.3%/°C
Max. recommended extensions per minute: approx. 15 to 40 (at 20°C)
Max. piston speed: 1.6 m/s

## 2484.12.01500.

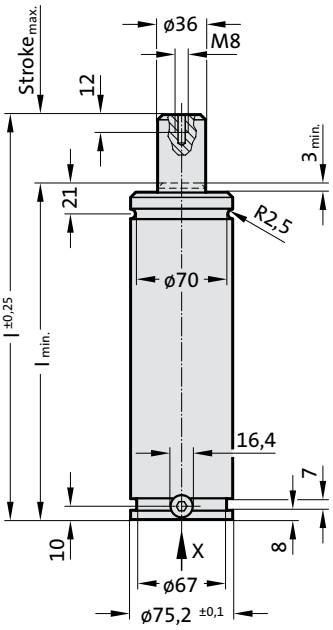

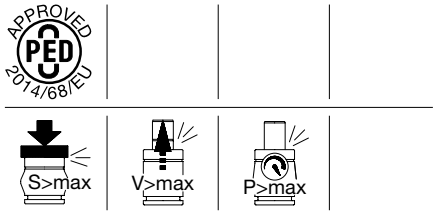


View X - Gas spring

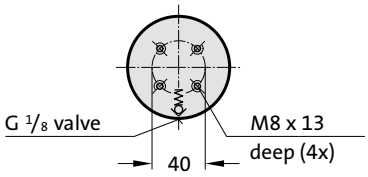


**2484.12.01500.**

**LCF Gas Spring, damped**

| Order No | $Stroke_{max.}$ (s) | $l_{min.}$ | l |
|---|---|---|---|
| 2484.12.01500.025 | 25 | 135 | 160 |
| 2484.12.01500.038 | 38.1 | 148.1 | 186.2 |
| 2484.12.01500.050 | 50 | 160 | 210 |
| 2484.12.01500.063 | 63.5 | 173.5 | 237 |
| 2484.12.01500.080 | 80 | 190 | 270 |
| 2484.12.01500.100 | 100 | 210 | 310 |
| 2484.12.01500.125 | 125 | 235 | 360 |
| 2484.12.01500.160 | 160 | 270 | 430 |
| 2484.12.01500.200 | 200 | 310 | 510 |
| 2484.12.01500.250 | 250 | 360 | 610 |
| 2484.12.01500.300 | 300 | 410 | 710 |

Initial spring force
versus charge pressure

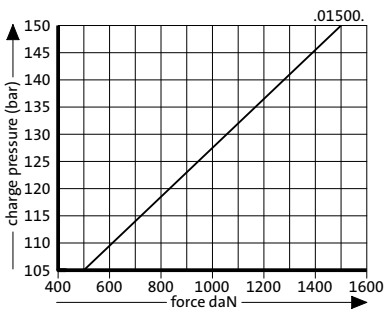


Spring force Diagram displacement versus stroke rise

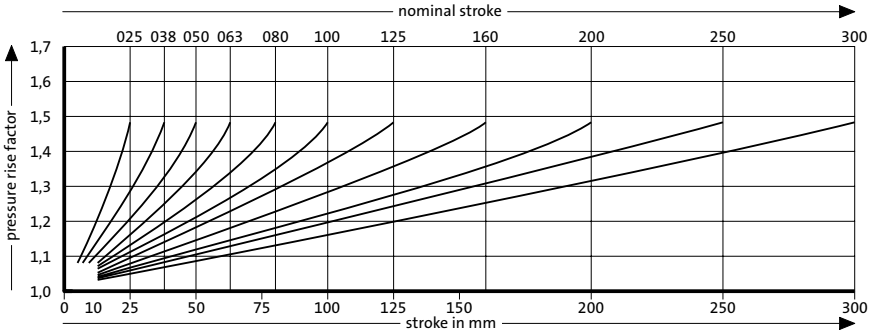


Pressure rise factor accounts for displacement but not external influences!

# LCF GAS SPRING, DAMPED
# MOUNTING VARIATIONS

2480.007.03000

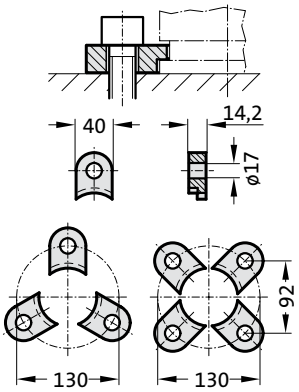


2480.008.03000 [3]

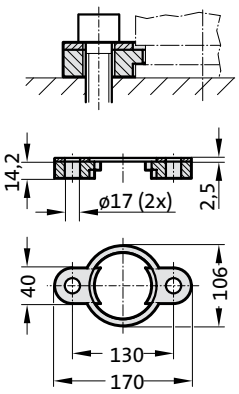


2480.010.03000.140 [3]
2480.010.03000.215* [3]

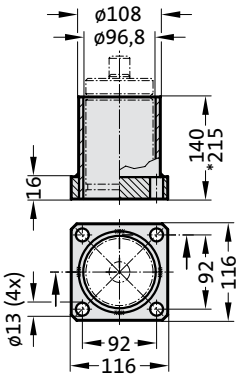


2480.011.03000

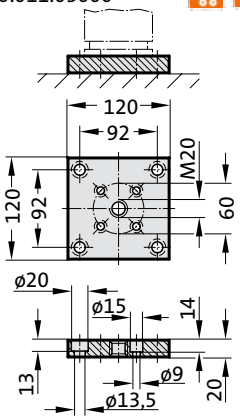


2480.011.03000.2

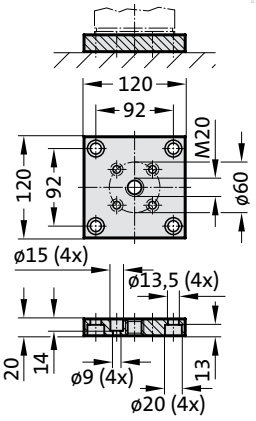


2480.022.03000

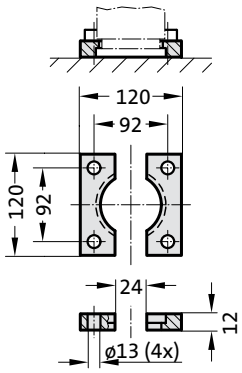


2480.044.03000 [2]

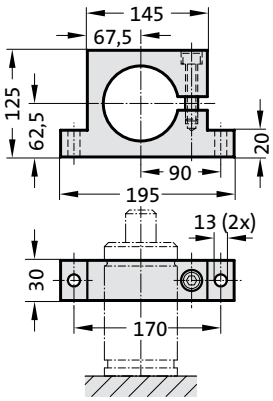


2480.044.03.03000 [2]

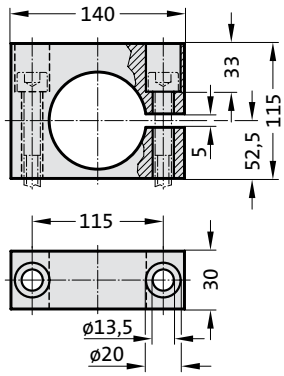


2480.045.03000 [2]

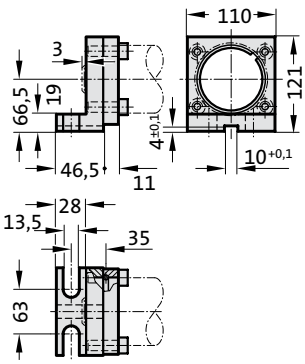


2480.047.03000 [2]

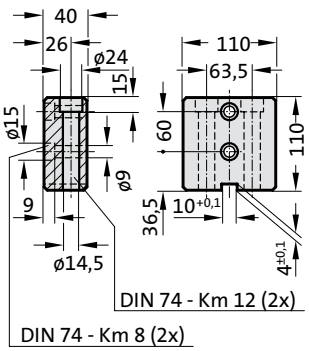


2480.055.03000

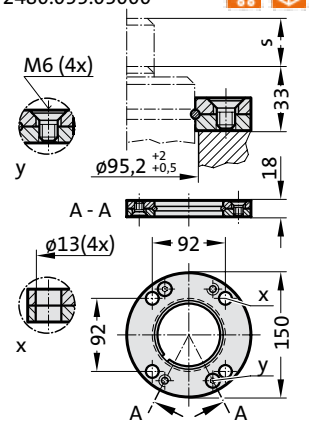


2480.057.03000

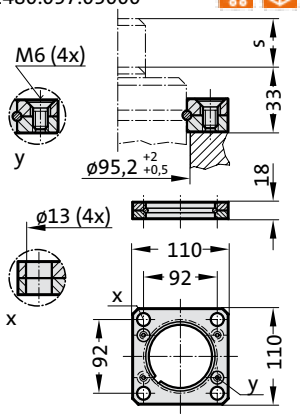


2480.064.03000 [4]

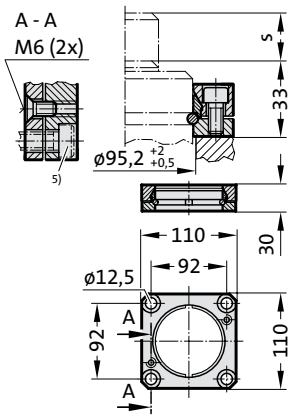


**Note:**

[2] Attention:
The spring force must be absorbed by the stop Surface!

[3] Not for use with composite connection.

[4] Square collar flange, non-rotating, fixing for composite connection.

[5] Machine screws with hexagonal socket (compact head recommended)

# LCF GAS SPRING, DAMPED

**Note:**
Initial spring force $F_{lcf}$ at 150 bar =1600 daN
Full spring force after 3.8 mm damped spring travel

Order No for spare parts kit: 2484.13.03000

Gas spring without valve
Order No (example): 2484.13.03000. .P

Pressure medium: Nitrogen $N_2$
Max. filling pressure: 150 bar
Min. filling pressure: 68 bar
Working temperature: 0°C to +80°C
Temperature related force increase: ± 0.3%/°C
Max. recommended extensions per minute: approx. 15 to 40 (at 20°C)
Max. piston speed: 1.6 m/s

## 2484.13.03000.

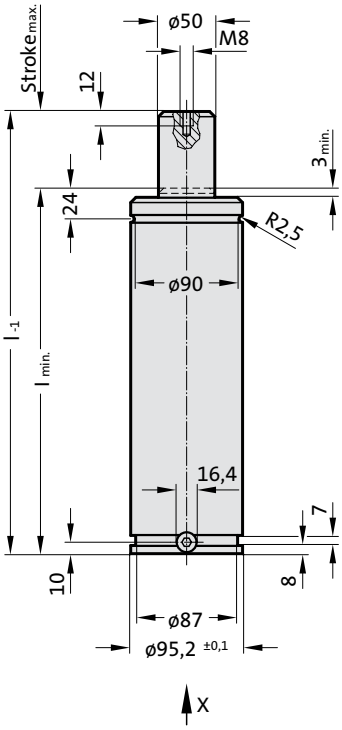


View X - Gas spring

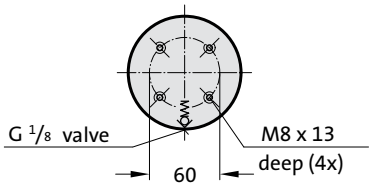

APPROVED PED 2014/68/EU

S>max | V>max | P>max

**2484.13.03000.**

**LCF Gas Spring, damped**

| Order No | Stroke$_{max.}$ (s) | $l_{min.}$ | l |
|---|---|---|---|
| 2484.13.03000.025 | 25 | 145 | 170 |
| 2484.13.03000.038 | 38.1 | 158.1 | 196.2 |
| 2484.13.03000.050 | 50 | 170 | 220 |
| 2484.13.03000.063 | 63.5 | 183.5 | 247 |
| 2484.13.03000.080 | 80 | 200 | 280 |
| 2484.13.03000.100 | 100 | 220 | 320 |
| 2484.13.03000.125 | 125 | 245 | 370 |
| 2484.13.03000.160 | 160 | 280 | 440 |
| 2484.13.03000.200 | 200 | 320 | 520 |
| 2484.13.03000.250 | 250 | 370 | 620 |
| 2484.13.03000.300 | 300 | 420 | 720 |

Initial spring force
versus charge pressure

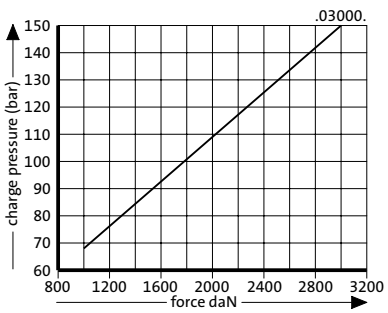


Spring force Diagram displacement versus stroke rise

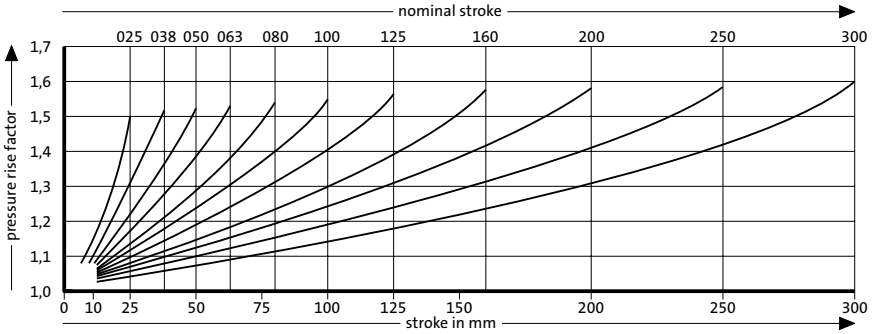


Pressure rise factor accounts for displacement but not external influences!

# LCF GAS SPRING, DAMPED
# MOUNTING VARIATIONS

2480.007.05000

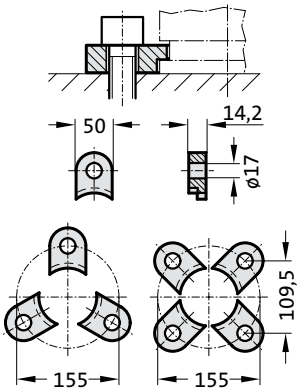


2480.008.05000 [3]

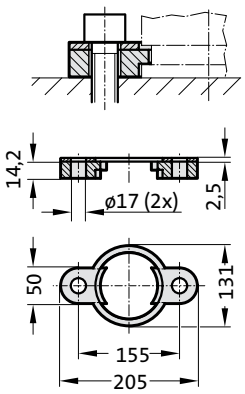


2480.010.05000.160 [3]

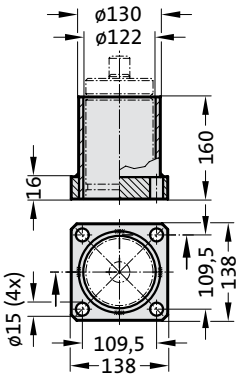


2480.011.05000

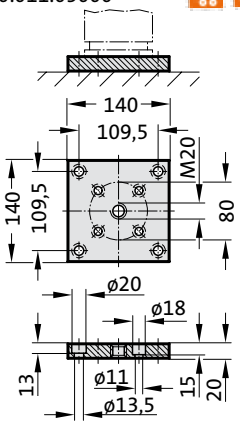


2480.011.05000.2

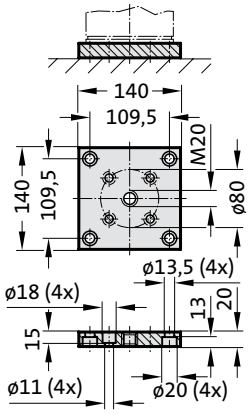


2480.022.05000

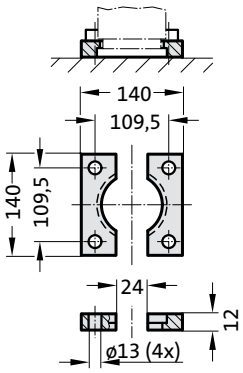


2480.044.05000 [2]

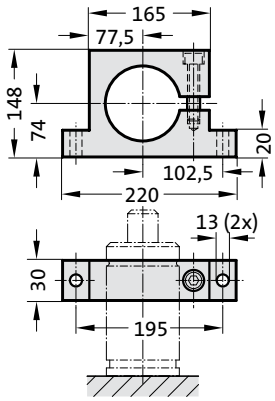


2480.044.03.05000 [2]

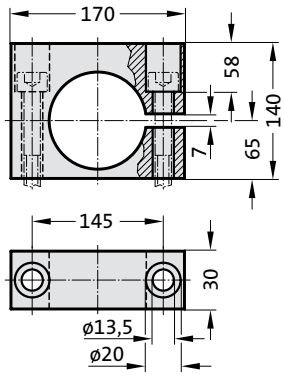


2480.045.05000 [2]

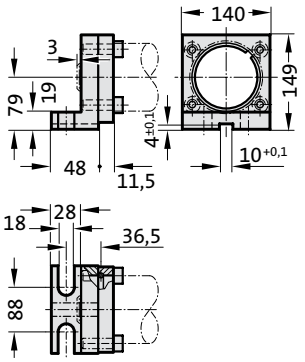


2480.047.05000 [2]

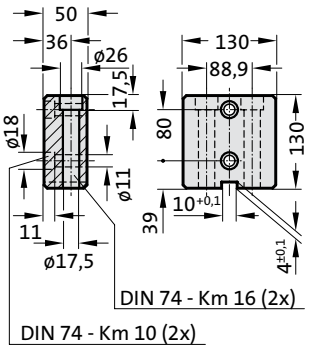


2480.055.05000

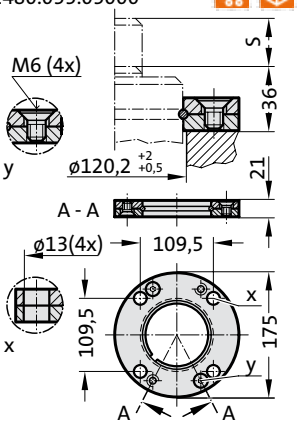


2480.057.05000

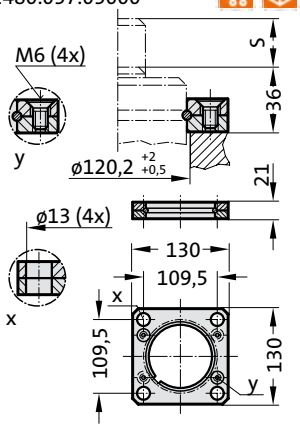


2480.064.05000 [4]

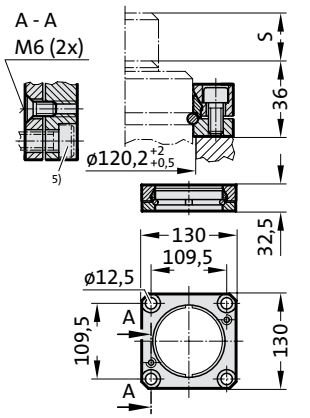


**Note:**

[2] Attention:
The spring force must be absorbed by the stop Surface!

[3] Not for use with composite connection.

[4] Square collar flange, non-rotating, fixing for composite connection.

[5] Machine screws with hexagonal socket (compact head recommended)

# LCF GAS SPRING, DAMPED

**Note:**
Initial spring force $F_{lcf}$ at 150 bar =2500 daN
Full spring force after 7.7 mm damped spring travel

Order No for spare parts kit: 2484.13.05000

Gas spring without valve
Order No (example): 2484.13.05000. .P

Pressure medium: Nitrogen $N_2$
Max. filling pressure: 150 bar
Min. filling pressure: 75 bar
Working temperature: 0°C to +80°C
Temperature related force increase: ± 0.3%/°C
Max. recommended extensions per minute: approx. 15 to 40 (at 20°C)
Max. piston speed: 1.6 m/s

## 2484.13.05000.

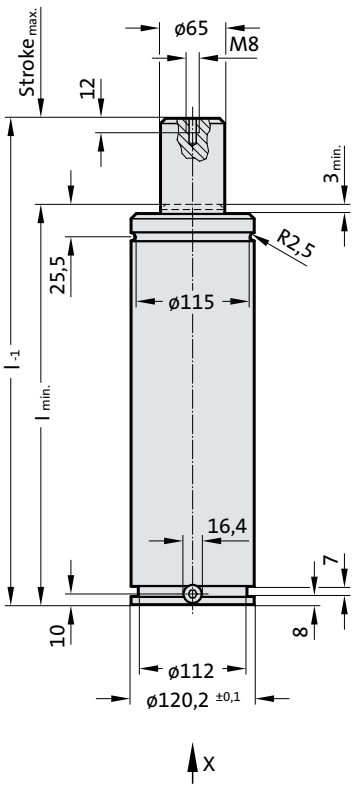


View X - Gas spring

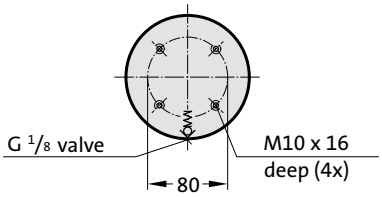

APPROVED PED 2014/68/EU

S>max | V>max | P>max | Flex Guide

**2484.13.05000.**

**LCF Gas Spring, damped**

| Order No | Stroke$_{max.}$ (s) | $l_{min.}$ | l |
|---|---|---|---|
| 2484.13.05000.025 | 25 | 165 | 190 |
| 2484.13.05000.038 | 38.1 | 178.1 | 216.2 |
| 2484.13.05000.050 | 50 | 190 | 240 |
| 2484.13.05000.063 | 63.5 | 203.5 | 267 |
| 2484.13.05000.080 | 80 | 220 | 300 |
| 2484.13.05000.100 | 100 | 240 | 340 |
| 2484.13.05000.125 | 125 | 265 | 390 |
| 2484.13.05000.160 | 160 | 300 | 460 |
| 2484.13.05000.200 | 200 | 340 | 540 |
| 2484.13.05000.250 | 250 | 390 | 640 |
| 2484.13.05000.300 | 300 | 440 | 740 |

Initial spring force
versus charge pressure

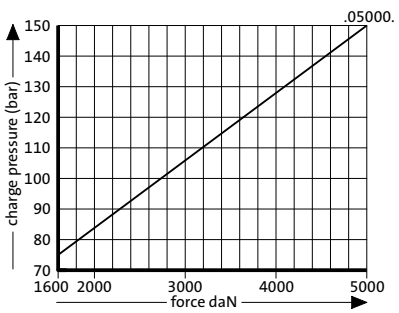


Spring force Diagram displacement versus stroke rise

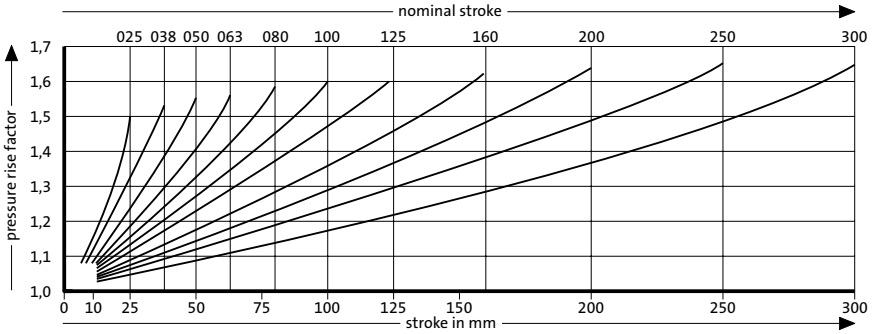


Pressure rise factor accounts for displacement but not external influences!

# LCF GAS SPRING, DAMPED
# MOUNTING VARIATIONS

2480.007.07500

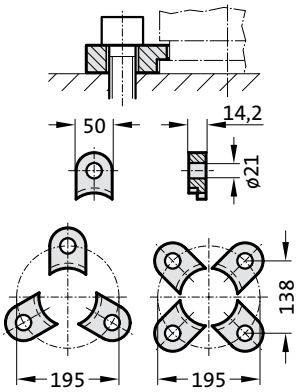


2480.008.07500 [3]

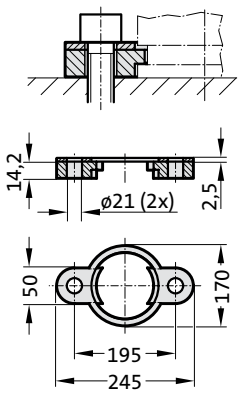


2480.011.07500

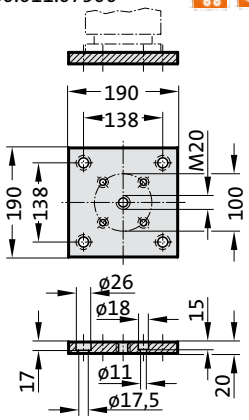


2480.011.07500.2

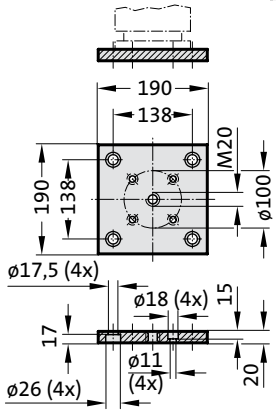


2480.011.03.07500

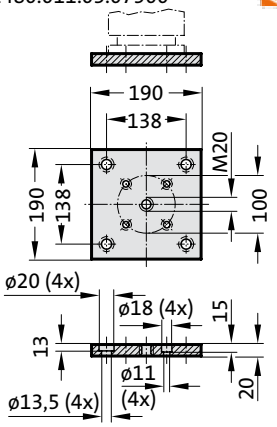


2480.011.03.07500.2

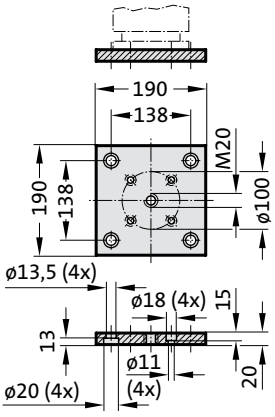


2480.022.07500

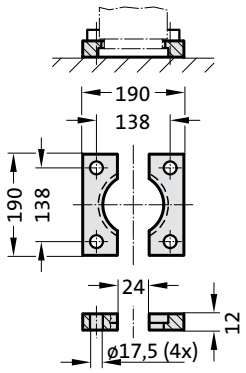


2480.044.07500 [2]

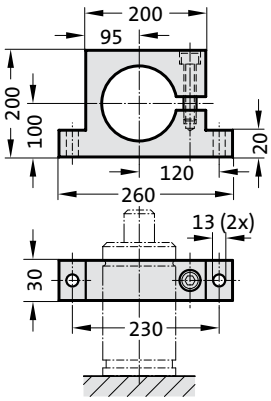


2480.044.03.07500 [2]

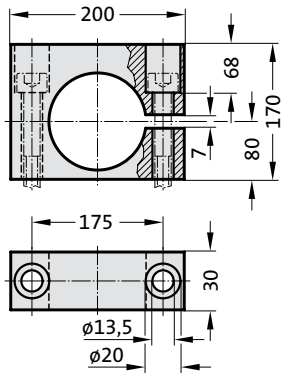


2480.055.07500

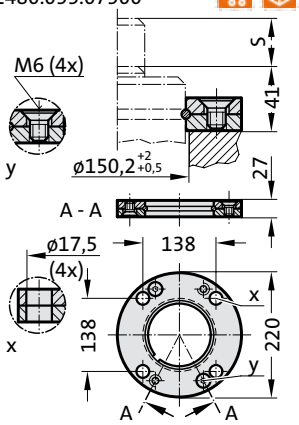


2480.057.07500

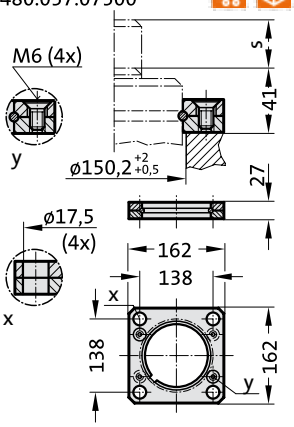


2480.064.07500 [4]

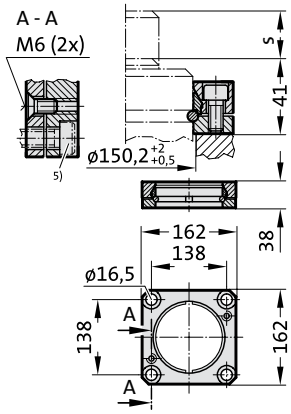


**Note:**

[2] Attention:
The spring force must be absorbed by the stop Surface!

[3] Not for use with composite connection.

[4] Square collar flange, non-rotating, fixing for composite connection.

[5] Machine screws with hexagonal socket (compact head recommended)

# LCF GAS SPRING, DAMPED

**Note:**
Initial spring force $F_{lcf}$ at 150 bar =3000 daN
Full spring force after 10.4 mm damped spring travel

Order No for spare parts kit: 2484.13.07500

Gas spring without valve
Order No (example): 2484.13.07500. .P

Pressure medium: Nitrogen $N_2$
Max. filling pressure: 150 bar
Min. filling pressure: 89 bar
Working temperature: 0°C to +80°C
Temperature related force increase: ± 0.3%/°C
Max. recommended extensions per minute: approx. 15 to 40 (at 20°C)
Max. piston speed: 1.6 m/s

## 2484.13.07500.

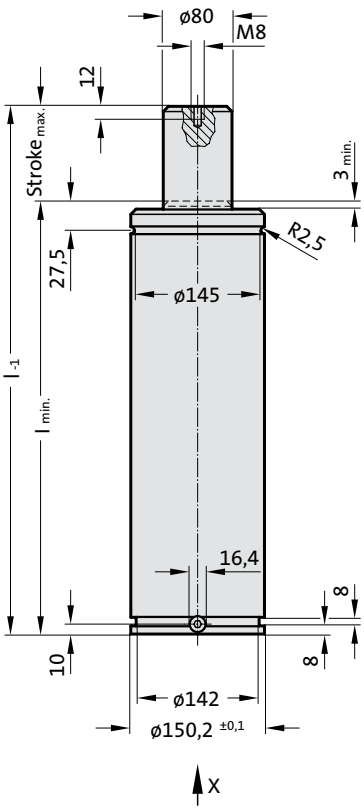


View X - Gas spring

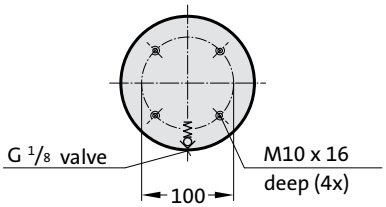

APPROVED PED 2014/68/EU

S>max | V>max | P>max | Flex Guide

**2484.13.07500.**

**LCF Gas Spring, damped**

| Order No | Stroke$_{max.}$ (s) | $l_{min.}$ | l |
|---|---|---|---|
| 2484.13.07500.025 | 25 | 180 | 205 |
| 2484.13.07500.038 | 38.1 | 193.1 | 231.2 |
| 2484.13.07500.050 | 50 | 205 | 255 |
| 2484.13.07500.063 | 63.5 | 218.5 | 282 |
| 2484.13.07500.080 | 80 | 235 | 315 |
| 2484.13.07500.100 | 100 | 255 | 355 |
| 2484.13.07500.125 | 125 | 280 | 405 |
| 2484.13.07500.160 | 160 | 315 | 475 |
| 2484.13.07500.200 | 200 | 355 | 555 |
| 2484.13.07500.250 | 250 | 405 | 655 |
| 2484.13.07500.300 | 300 | 455 | 755 |

Initial spring force
versus charge pressure

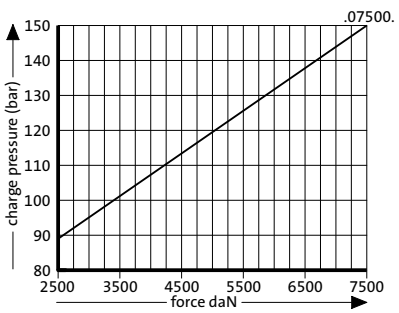


Spring force Diagram displacement versus stroke rise

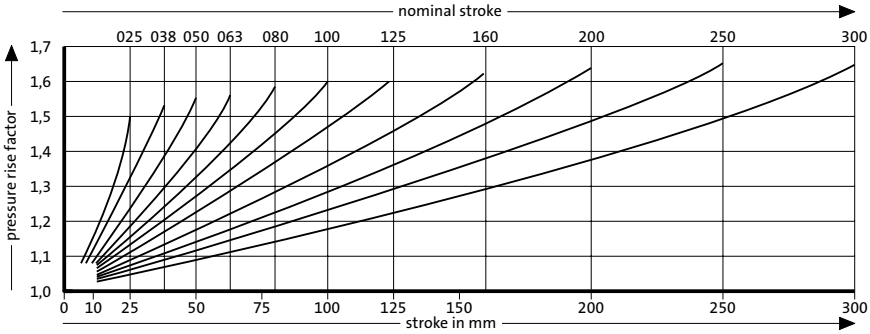


Pressure rise factor accounts for displacement but not external influences!

# CONTROLLABLE GAS SPRINGS

## PATENTED

PLEASE REQUEST YOUR CATALOGUE

# AIR SPRINGS TO VW STANDARD

PLEASE REQUEST YOUR CATALOGUE

# MANIFOLDSYSTEMS

PLEASE REQUEST YOUR CATALOGUE

# COMPOSITE PLATES

PLEASE REQUEST YOUR CATALOGUE

# GAS SPRINGS - ACCESSORIES

# PRESSURE RESERVOIR FOR REDUCED PRESSURE RISE

## 2480.00.70.

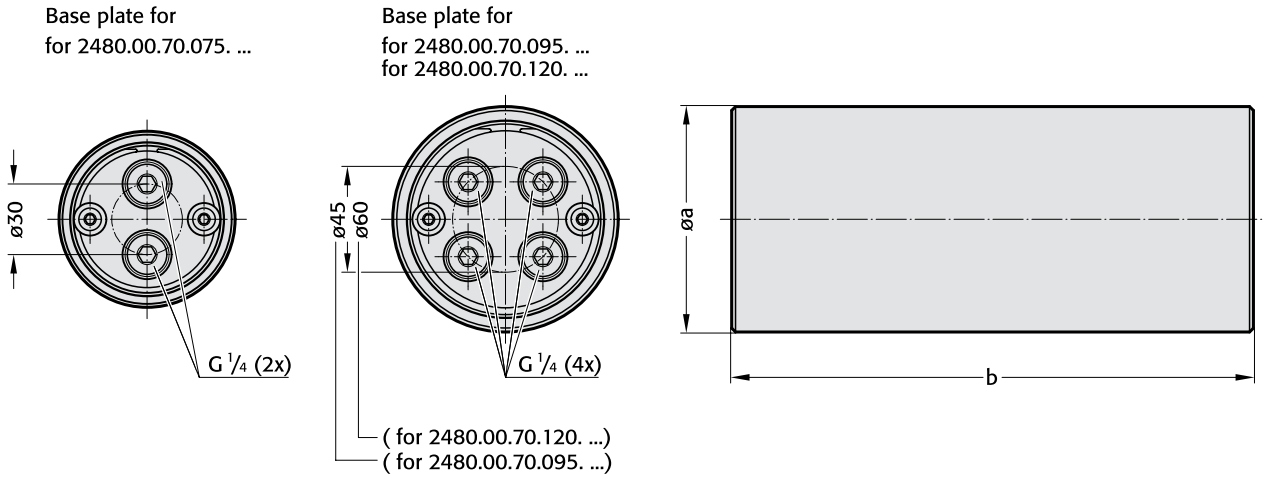


### Description:

The pressure reservoir and its base plates are manufactured from the same high grade steel as FIBRO gas springs.
The advantage of including a pressure reservoir in the system is that in operation the gas pressure rises to a lesser extent. Apart from the purely technical pressure factors, a reduced pressure rise is beneficial to the service life of the system.

### Function:

The pressure reservoir has two or four mounting holes with G1/4“ at both sides, which are designed for connection to the control fitting or gas spring.

### Note:

If a pressure reservoir is to be installed, we recommend the 24°-cone-system, which ensures that the gas flow is not inhibited.
Mounting clamps should be ordered separately. At least 2 are required for each pressure reservoir, see following pages.

### 2480.00.70. Pressure reservoir

| Order No. | Volume in l [litres] | ∅ a | b |
|---|---|---|---|
| 2480.00.70.075.0170 | 0,25 | 75 | 170 |
| 2480.00.70.075.0250 | 0,50 | 75 | 250 |
| 2480.00.70.075.0410 | 1,0 | 75 | 410 |
| 2480.00.70.095.0300 | 1,0 | 95 | 300 |
| 2480.00.70.095.0500 | 2,0 | 95 | 500 |
| 2480.00.70.095.0700 | 3,0 | 95 | 700 |
| 2480.00.70.095.0900 | 4,0 | 95 | 900 |
| 2480.00.70.120.0360 | 2,0 | 120 | 360 |
| 2480.00.70.120.0615 | 4,0 | 120 | 615 |
| 2480.00.70.120.1125 | 8,0 | 120 | 1125 |

### Ordering Code (example):

| | | |
|---|---|---|
| Pressure reservoir | = 2480.00.70. | |
| øa = 75 mm | = | 075. |
| b = 170 mm | = | 0170 |
| Order No. | = 2480.00.70.075.0170 | |

| Gas spring size/daN | Piston rod surface/dm² |
|---|---|
| .00500 | 0,031 |
| .00750 | 0,049 |
| .01500 | 0,102 |
| .03000 | 0,196 |
| .05000 | 0,332 |
| .07500 | 0,503 |
| .10000 | 0,709 |

### Calculating the isothermic increase in pressure*

(*by approximation)

$$\text{Pressure build-up} = \frac{V_a + (n \times V_g{}^{1)})}{V_a + (n \times (V_g{}^{1)} - \text{Hub} \times A))}$$

| | | |
|---|---|---|
| $V_a$ | [l] | Volume of pressure reservoir, see table |
| $V_g{}^{1)}$ | [l] | Gas volume of gas springs, corresponding spring type<br>1) Note: For the design, gas volume of the spring type, please contact FIBRO! |
| Stroke | [dm] | Stroke length of gas springs, corresponding to spring type |
| A | [dm²] | Piston surface of gas springs, see table |
| n | | Number of gas springs |

### Calculation example:

10 gas springs, type 2480.13.05000.050 with a travel of 50 mm (0,5 dm) are connected to a system with an 8 litres pressure reservoir.

$$\text{Pressure build-up} = \frac{8\ l + (10 \times 0{,}51\ l)}{8\ l + (10 \times (0{,}51\ l - 0{,}5\ dm \times 0{,}332\ dm^2))} = 1{,}145$$

# PRESSURE RESERVOIR FOR REDUCED PRESSURE RISE

2480.00.70. **Installation example: 24° cone hose system**

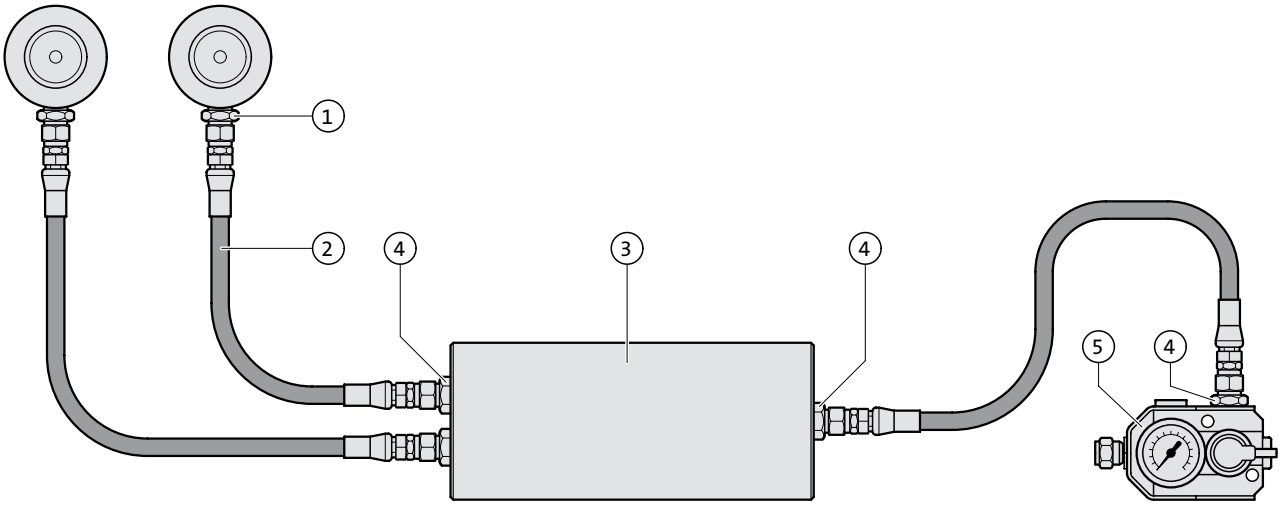


| Item No. | Quantity | Description | Order No. |
|---|---|---|---|
| 1 | 2 | Screw connection G1/8 G$^1/_8$ | 2480.00.26.03 |
| 2 | 3 | 24°-cone-hose | 2480.00.25.01.□ □ □ □ |
| 3 | 1 | Pressure reservoir | 2480.00.70. □ □ □.□ □ □ □ |
| 4 | 4 | Screw connection G$^1/_4$ | 2480.00.26.04 |
| 5 | 1 | Control fitting | 2480.00.31.01 |

# MOUNTING CLAMP FOR PRESSURE RESERVOIR

## 2480.00.70.

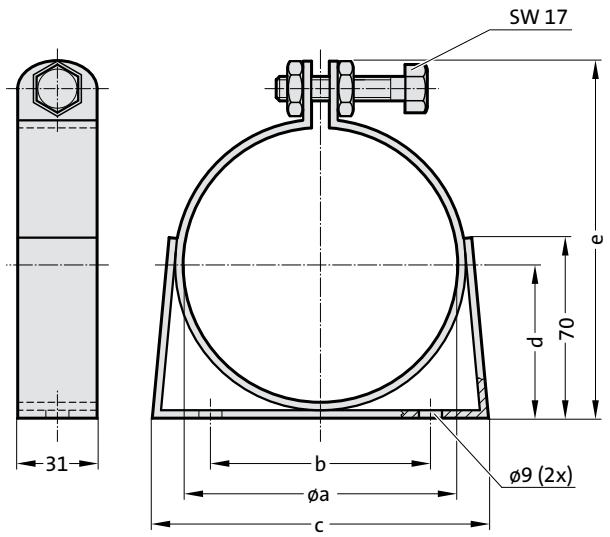


### Description:

The mounting clamp is a rubber coated galvanised sheet steel ring and is used for mounting the FIBRO pressure reservoir.

### Attention:

At least 2 fixing clamps are required per pressure reservoir.
If the pressure tank is to be mounted vertically, it should be seated on a robust base.

### Ordering Code (example):

| | | |
|---|---|---|
| Mounting clamp for pressure reservoir (1 Quantity) | = 2480.00.70. | |
| ∅a = 75 mm | = | 075 |
| Order No. | = 2480.00.70.075 | |

**2480.00.70. Mounting clamp for pressure reservoir**

| Order No. | ∅a | b | c | d | e |
|---|---|---|---|---|---|
| 2480.00.70.075 | 75 | 80 | 105 | 41,5 | 102 |
| 2480.00.70.095 | 95 | 100 | 145 | 51,5 | 122 |
| 2480.00.70.120 | 120 | 100 | 145 | 64 | 147 |

### Installation options:

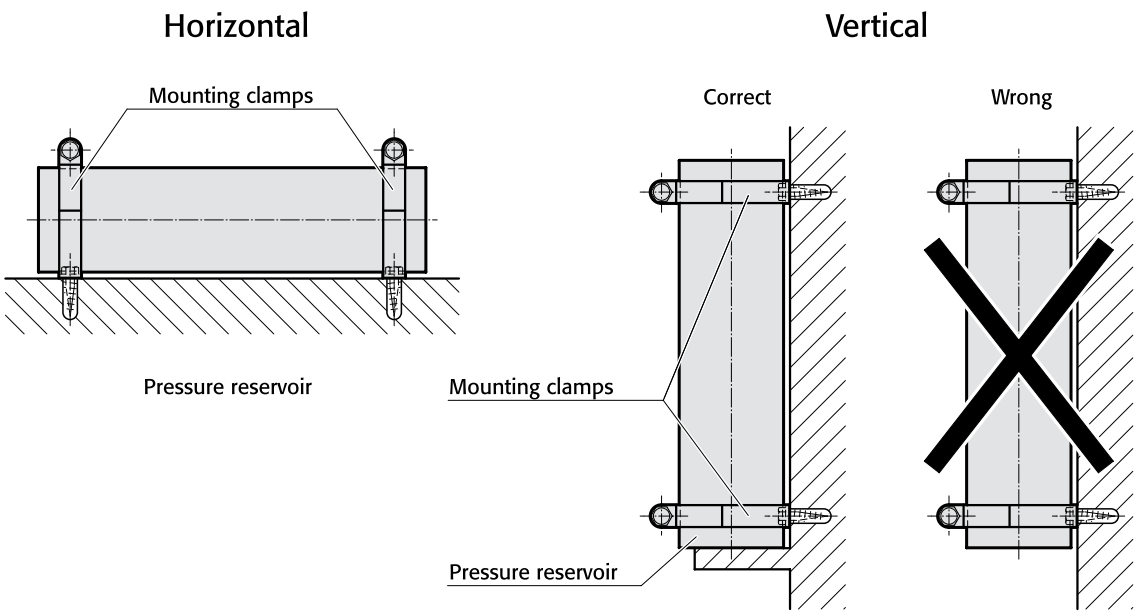

# PRESSURE PLATES, SHOCK ABSORBING

## 2480.015.

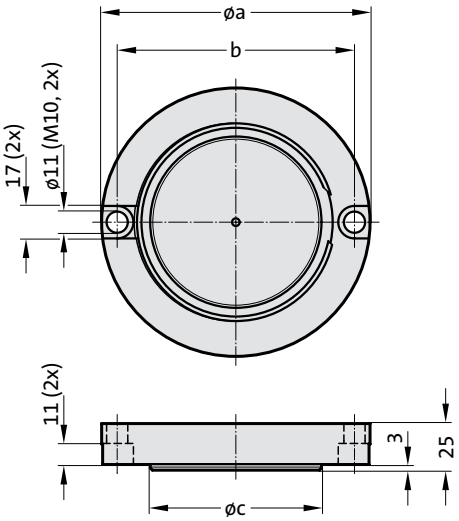

### Mounting example

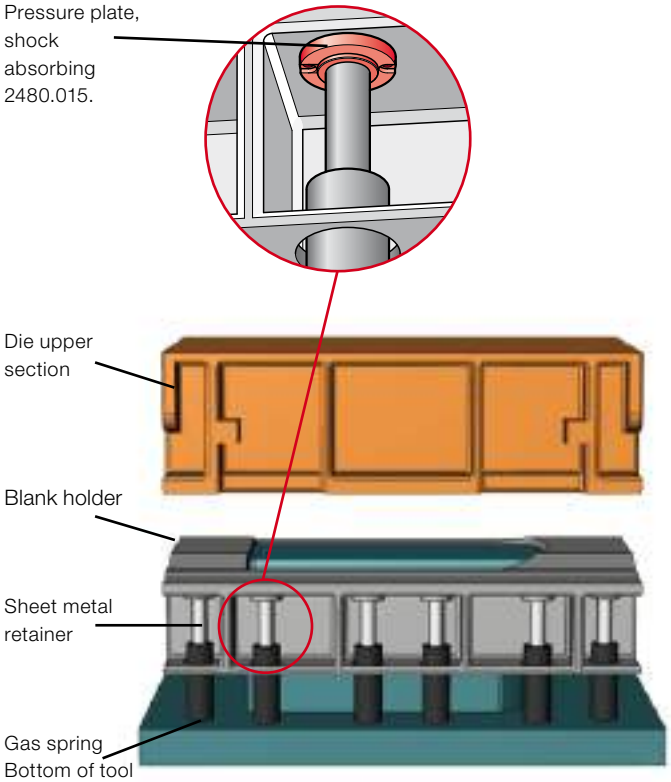


### 2480.015. Pressure Plates, shock absorbing

| Order No. | Gas spring strength | a | b | c |
|---|---|---|---|---|
| 2480.015.01500 | 750 – 1500 | 108 | 91 | 58 |
| 2480.015.05000 | > 1500 – 6600 | 143 | 126 | 92 |
| 2480.015.10000 | > 6600 – 10600 | 167 | 150 | 112 |

### Description:

The shock absorbing pressure plate is designed to minimise the main problems in the metal forming industry.
Factors such as
- extreme shock load
- this means high press maintenance costs
- high noise level
- reduced parts quality

are reduced by a specially developed damping element.
Guidelines for using shock absorbing pressure plates with gas springs:
1. After the maximum shock absorbing travel of 3 mm the gas spring will reach the same initial spring force as it would without the shock absorbing pressure plate.
2. The shock absorbing pressure plate is mounted between the tool and the piston rod of the gas spring.

### Material:

Steel, nitride
Polyurethane

### Note:

| | |
|---|---|
| Working temperature: | 0 °C to 80 °C |
| recommended max. strokes/min.: | 20 |
| max. pressing speed: | 1.6 m/s |
| max. shock absorbing travel: | 3 mm |

## Function

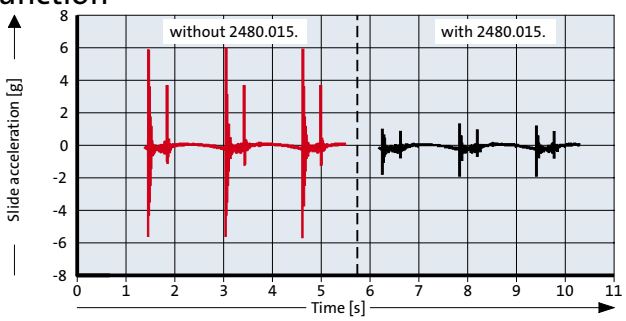


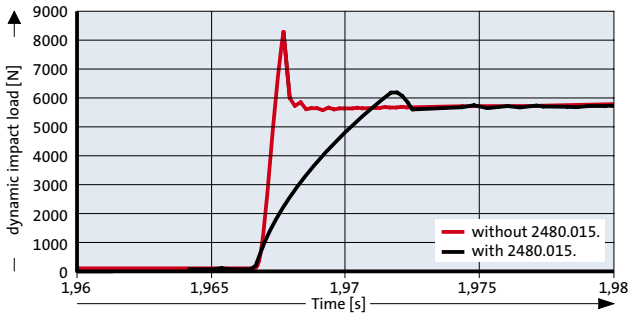

# THRUST PAD
# PRESSURE PLATE

## 2480.004.

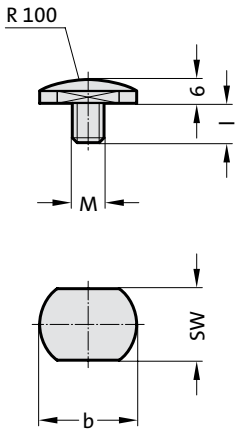


**2480.004. Thrust Pad**

| Order No | Socket cap screw DIN EN ISO 4762 | SW | b | l |
|---|---|---|---|---|
| 2480.004.06 | 6 | 17 | 20 | 6 |
| 2480.004.08 | 8 | 19 | 22.5 | 11 |

**Description:**
Trust pad for gas springs with M6 and M8 thread in the piston rod, not for 2480.13.00500.□□□.

**Material:**
No 1.7131, case-hardened

**Attention:**
Can only be used for gas springs, standard 2480.12./13.!

## 2480.009.

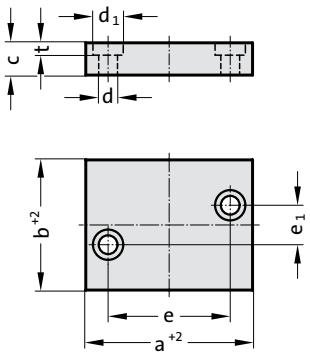


**2480.009. Pressure plate**

| Order No* | max. piston rod diameter | a | b | c | d | $d_1$ | e | $e_1$ | t |
|---|---|---|---|---|---|---|---|---|---|
| 2480.009.00250 | 15 | 50 | 25 | 12 | 7 | 11 | 32 | 8 | 7 |
| 2480.009.00500 | 20 | 55 | 30 | 12 | 7 | 11 | 40 | 14 | 7 |
| 2480.009.00500.1 | 20 | 55 | 32 | 16 | 9 | 15 | 37 | 0 | 9 |
| 2480.009.00750 | 25 | 70 | 35 | 15 | 9 | 15 | 48 | 14 | 9 |
| 2480.009.00750.1 | 36 | 65 | 50 | 16 | 9 | 15 | 47 | 0 | 9 |
| 2480.009.01500 | 36 | 75 | 50 | 15 | 9 | 15 | 56 | 30 | 9 |
| 2480.009.03000 | 50 | 85 | 60 | 15 | 9 | 15 | 66 | 40 | 9 |
| 2480.009.03000.1 | 50 | 80 | 60 | 16 | 9 | 15 | 62 | 0 | 9 |
| 2480.009.05000 | 65 | 100 | 80 | 20 | 11 | 18 | 72 | 56 | 11 |
| 2480.009.05000.2 | 65 | 102 | 80 | 20 | 11 | 18 | 80 | 0 | 11 |
| 2480.009.07500 | 80 | 110 | 100 | 20 | 11 | 18 | 85 | 75 | 11 |
| 2480.009.07500.2 | 80 | 117 | 100 | 20 | 11 | 18 | 95 | 0 | 11 |
| 2480.009.10000.1 | 90 | 132 | 100 | 20 | 11 | 18 | 110 | 0 | 11 |

*Execution .1/.2 to Volvo standard

**Material:**
No 1.2842, hardened
or
No 1.2379, hardened

## 2480.018.

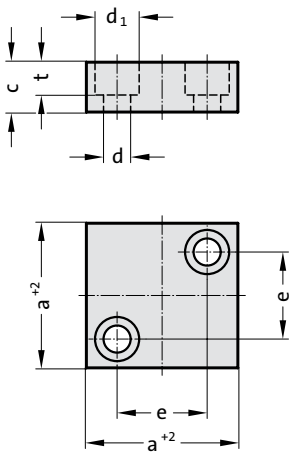


**2480.018. Pressure plate**

| Order No | max. piston rod diameter | a | c | d | $d_1$ | e | t |
|---|---|---|---|---|---|---|---|
| 2480.018.01500 | 65 | 90 | 12 | 9 | 15 | 64 | 9 |

**Material:**
No 1.2842, hardened

# PRESSURE PLATE
# PRESSURE PLATE TO RENAULT STANDARD

**2480.019.** **Pressure plate**

| Order No* | max. piston rod diameter | a | c | d | $d_1$ | e | t |
|---|---|---|---|---|---|---|---|
| 2480.019.00100 | 15 | 40 | 15 | 9 | 15 | 21 | 10 |
| 2480.019.00100.2 | 15 | 40 | 15 | 7 | 11 | 24 | 7 |
| 2480.019.00750 | 25 | 56 | 20 | 11 | 18 | 32 | 13 |
| 2480.019.03000 | 50 | 71 | 20 | 11 | 18 | 48 | 13 |
| 2480.019.03000.2 | 50 | 70 | 15 | 9 | 15 | 50 | 9 |
| 2480.019.03000.1 | 80 | 90 | 20 | 11 | 18 | 67 | 13 |
| 2480.019.07500.2 | 80 | 90 | 15 | 9 | 15 | 70 | 9 |
| 2480.019.07500 | 95 | 140 | 20 | 11 | 18 | 110 | 13 |

*Execution .2 to VDI 3003

**Material:**
No 1.2842, hardened
or
No 1.2379, hardened

2480.019.

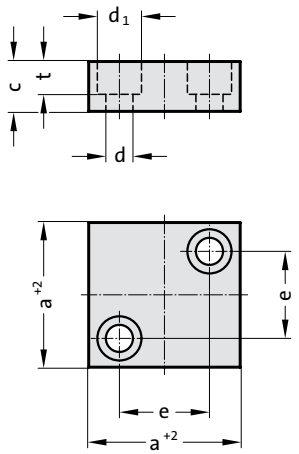


**2480.019.45.** **Pressure plate to Renault standard**

| Order No | Shape | max. piston rod diameter | a | e | d |
|---|---|---|---|---|---|
| 2480.019.45.00750 | A | 50 | 70 | 50 | 11 |
| 2480.019.45.01500 | A | 80 | 90 | 70 | 11 |
| 2480.019.45.03000 | B | 95 | 105 | 85 | 11 |
| 2480.019.45.05000 | B | 95 | 125 | 105 | 11 |
| 2480.019.45.07500 | B | 95 | 150 | 125 | 13 |
| 2480.019.45.10000 | B | 95 | 190 | 165 | 13 |

**Material:**
No 1.2842, hardened
or
No 1.2379, hardened

2480.019.45.

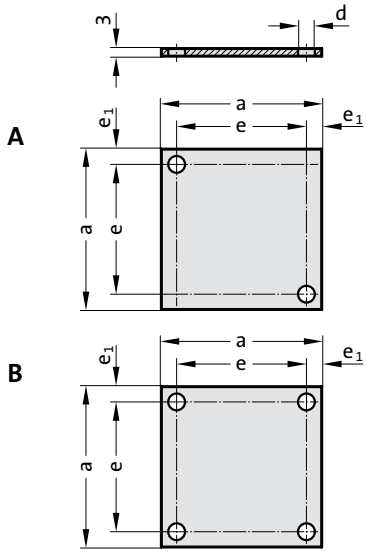


**Description:**
The hardened thrust pad 2480.004. reduces side forces in cases of skew thrust vaces or lateral displacement component.

In conjunction with the thrust pads, the hardened thrust plates 2480.009., 2480.018. and 2480.019. further helps to protect the gas spring from lateral forces, through reduction of friction – even when used without the thrust pad.

Note:
Especially with gas springs of large stroking capacity we recommend the use of the pad plate combination!

**Mounting example**

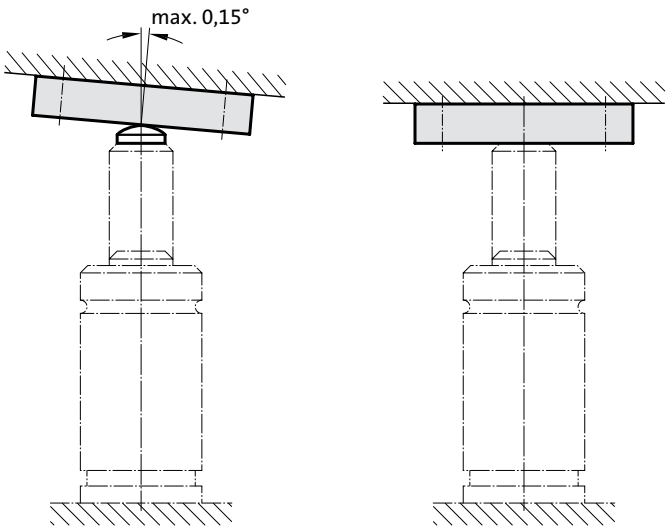

# CONCERTINA SHROUD FOR GAS SPRINGS

## Description:

The concertina shroud protects the piston rod of the gas spring against negative influences, such as e.g.:

- Dirt penetration
- Damage to the surface of the piston rod
- Adhesion of dirt particles
- Drawing in of oil and/or emulsion

The fastening of the folding bellows is internal (on the cylinder tube side) and does not have an interference contour, for example, due to externally attached pipe clamps. In this way, the gas spring can be attached and installed in the tool without limitations.
The concertina shroud for gas springs prolongs the lifetime of the gas springs under rough operating conditions.

## Technical data

| | | |
|---|---|---|
| Material : | Concertina shroud: | CSM-Rubber 65 ±3 Shore A |
| | Washer: | Steel burnished |
| | Ring: | stainless Steel |
| Temperature range: | | 0-90 °C |
| Chemical resistance | Acids: | very good |
| | Alkalines: | very good |
| | Solvent: | adequate |
| Weather resistance | Sun light (UV): | good |
| | Ozone: | excellent |
| | Water: | adequate |
| Oil resistance: | mineral: | good |
| | synthetic: | adequate |

## Delivery:

Concertina shroud incl. rotatable disk and countersunk screw.
Custom dimensions/materials available on request.

## Mounting examples:

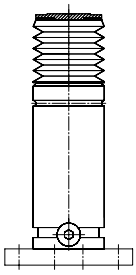

Screw mounted at the base with 2480.011.

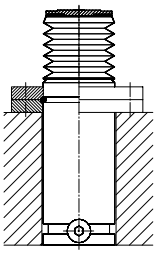

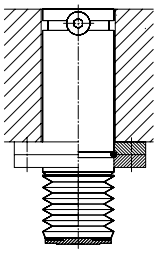

fastened with 2480.055./057./064.

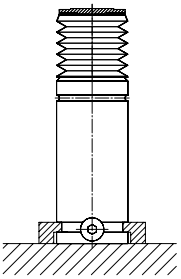

fastened with 2480.007./008.

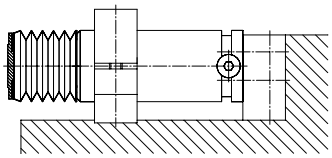

fastened with 2480.044./045./047.

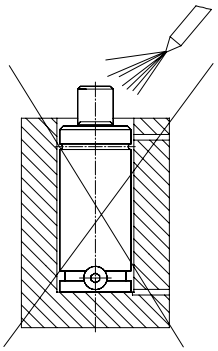

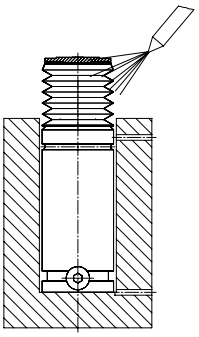

installed loose in the bore

More mounting examples for gas springs see page „Mounting directions for gas springs”

# CONCERTINA SHROUD FOR GAS SPRINGS

## 2480.080.

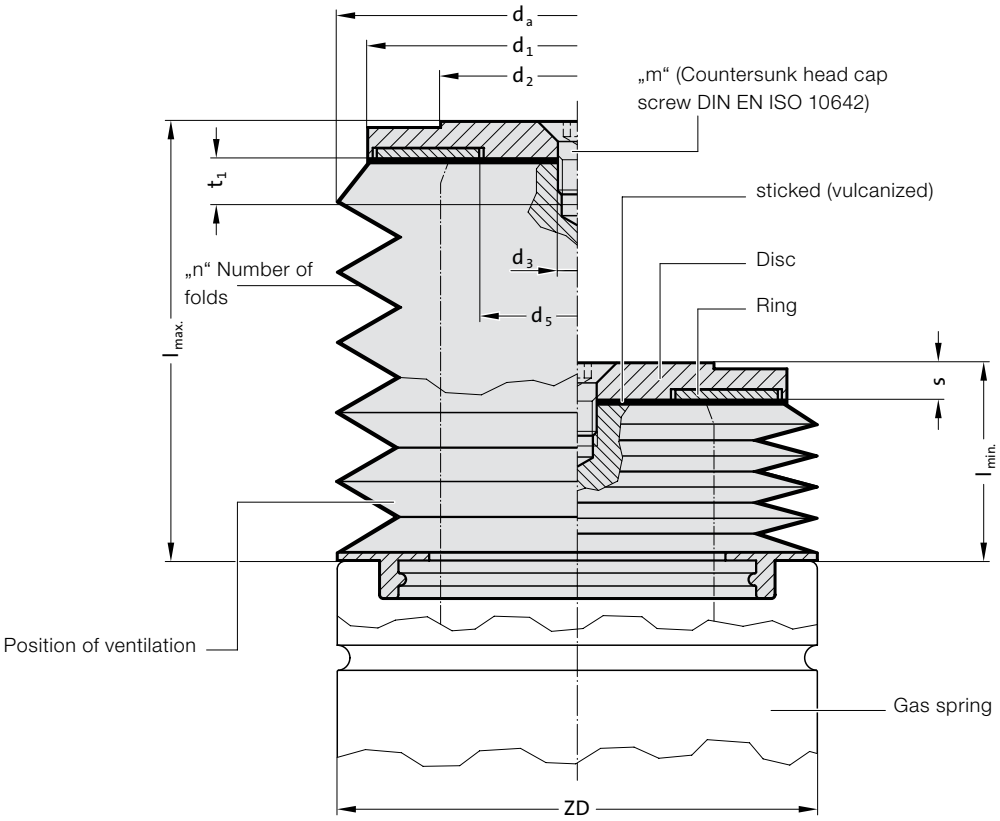


### 2480.080. Concertina shroud for gas springs

| Type of gas spring | 2487.12.00350. 2487.12.33.00350. | 2487.12.00500. 2487.12.33.00500. | 2480.13.00500. | 2487.12.00750..1 2487.12.33.00750. 2488.13.00750. | 2480.13.00750. | 2487.12.01000..1 2487.12.33.01000. 2488.13.01000. | 2487.12.01500. 2487.12.33.01500. 2488.13.01500. | 2480.12.01500. | 2487.12.02400. 2487.12.33.02400. 2488.13.02400. | 2480.13.03000. | 2487.12.04200. 2487.12.33.04200. 2488.13.04200. | 2480.13.05000. | 2487.12.06600. 2487.12.33.06600. 2488.13.06600. | 2480.13.07500. | 2487.12.09500. 2488.13.09500. |
|---|---|---|---|---|---|---|---|---|---|---|---|---|---|---|---|
| ZD | 32 | 38 | 45 | 45 | 50 | 50 | 63 | 75 | 75 | 95 | 95 | 120 | 120 | 150 | 150 |
| $d_a$ | 45 | 50 | 50 | 55 | 55 | 65 | 65 | 75 | 75 | 95 | 95 | 120 | 120 | 150 | 150 |
| $d_1$ | 32 | 38 | 45 | 45 | 50 | 50 | 63 | 75 | 75 | 95 | 95 | 120 | 120 | 150 | 150 |
| $d_2$ / KD | 16 | 20 | 20 | 25 | 25 | 28 | 36 | 36 | 45 | 50 | 60 | 65 | 75 | 80 | 90 |
| s | 6 | 6 | 6 | 6 | 6 | 6 | 6 | 6 | 6 | 6 | 6 | 6 | 6 | 9 | 6 |
| $d_3$ | 6,6 | 6,6 | 6,6 | 6,6 | 9 | 6,6 | 6,6 | 9 | 6,6 | 9 | 9 | 9 | 9 | 17 | 9 |
| $d_5$ | 10 | 14 | 14 | 17 | 17 | 20 | 28 | 28 | 37 | 42 | 51 | 57 | 66 | 71 | 81 |
| $t_1$ | 5 | 5 | 10 | 5 | 10 | 5 | 5 | 10 | 5 | 10 | 5,5 | 10 | 5,5 | 20 | 5,5 |
| m | M6×8 | M6×8 | M6×12 | M6×8 | M8×12 | M6×10 | M6×10 | M8×12 | M6×10 | M8×12 | M8×12 | M8×12 | M8×12 | M16×25 | M8×12 |
| Stroke | 125 (Stroke ≤ 125) | | | | | | | | | | | | | | |
| lmin. | 28 | 28 | 28 | 28 | 28 | 28 | 28 | 28 | 28 | 28 | 28 | 23 | 23 | 24 | 21 |
| lmax. | 133 | 133 | 133 | 133 | 134 | 134 | 134 | 134 | 134 | 134 | 134 | 134 | 134 | 137 | 134 |
| n | 10 | 10 | 10 | 10 | 10 | 10 | 10 | 10 | 10 | 8 | 8 | 6 | 6 | 5 | 5 |
| Stroke | 300 (Stroke > 125), not for 2487.12.* | | | | | | | | | | | | | | |
| lmin. | - | - | - | - | 52 | --*/52 | --*/52 | 52 | -- */52 | 54 | --*/54 | 41 | --*/41 | 37 | --*/34 |
| lmax. | - | - | - | - | 309 | 309 | 309 | 309 | 309 | 309 | 309 | 309 | 309 | 402 | 309 |
| n | - | - | - | - | 22 | --*/22 | --*/22 | 22 | --*/22 | 19 | --*/19 | 14 | --*/14 | 11 | --*/11 |

### Ordering Code (example):

| | | | |
|---|---|---|---|
| Concertina shroud | = 2480.080. | Concertina shroud | = 2480.080. |
| ZD = 120 mm | = 120. | ZD = 120 mm | = 120. |
| $d_2$/KD = 65 mm | = 065. | $d_2$/KD = 65 mm | = 065. |
| Stroke = 125 (Stroke ≤ 125 mm) | = 125 | Stroke = 300 (Stroke > 125 mm) | = 300 |
| Order No. | = 2480.080.120.065.125 | Order No. | = 2480.080.120.065.300 |

# PISTON ROD PROTECTION, FIBRO-TEX®

**Mounting example**

**2480.081.**

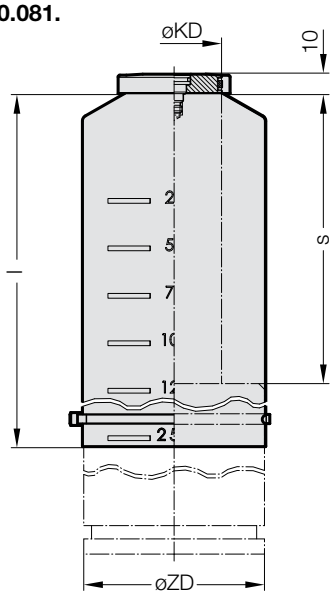


## Description:

The FIBRO-TEX® protects the piston rod of the gas spring against negative influences, such as:

- drawing in dirt
- damage to the surface of the piston rod
- adhesion of dirt particles
- drawing in oil and/or emulsion

The FIBRO-TEX® breathable material doesn't require aditional ventilation.

Due to the piston rod protection, FIBRO-TEX®, increases the lifetime of the gas spring under rough operating conditions.

## Note:

Included with this part number is the piston rod protection FIBRO-TEX®, with the necessary washer with screw and o-ring, premountet with cable ties (to piston rod), cable tie (for gas spring housing) is added separately. The piston rod protetion has a length of 250 mm. The length of the piston rod protection is shortend individually to the stroke length of the gas spring.

## Technical data:

| | | |
|---|---|---|
| Material: | Piston rod protection: | Polytetrafluo-rethylene (ePTFE) |
| | Washer: | Steel, burnished |
| | Cable tie (piston rod side): | Polyamide |
| | Cable tie (cylinder tube side): | Polyamide |
| Working temperature: | | 0°C - 80°C |
| Temperature resistance: | | -35°C - 200°C |
| Chemical resistance: | Acids: | excellent |
| | Alkalines: | excellent |
| | Solvent: | excellent |
| Weather-resistance: | Sunlight (UV): | excellent |
| | Ozone: | excellent |
| | Water: | excellent |
| Oil resistance: | mineral: | excellent |
| | synthetic: | excellent |

### 2480.081. Piston rod protection, FIBRO-TEX®

| Type of Gas spring | | | | | 2480.13.03000. | 2489.14.01500. | 2484.13.03000. | 2488.13.04200. | 2487.12.04200. | 2487.12.33.04200. | 2480.13.05000. | 2489.14.03000. | 2484.13.05000. | 2488.13.06600. | 2487.12.06600. | 2487.12.33.06600. | 2480.13.07500. | 2484.13.07500. | 2488.13.09500. | 2487.12.09500. | 2489.14.05000. |
|---|---|---|---|---|---|---|---|---|---|---|---|---|---|---|---|---|---|---|---|---|---|
| Order No | øKD | øZD | s | l | | | | | | | | | | | | | | | | | |
| 2480.081.095.050.250 | 50 | 95 | 10 - 250 | 250 | • | • | • | | | | | | | | | | | | | | |
| 2480.081.095.060.250 | 60 | 95 | 10 - 250 | 250 | | | | • | • | • | | | | | | | | | | | |
| 2480.081.120.065.250 | 65 | 120 | 10 - 250 | 250 | | | | | | | • | • | • | | | | | | | | |
| 2480.081.120.075.250 | 75 | 120 | 10 - 250 | 250 | | | | | | | | | | • | • | • | | | | | |
| 2480.081.150.065.250 | 65 | 150 | 10 - 250 | 250 | | | | | | | | | | | | | | | | | • |
| 2480.081.150.075.250 | 75 | 150 | 10 - 250 | 250 | | | | | | | | | | | | | • | • | | | |
| 2480.081.150.090.250 | 90 | 150 | 10 - 250 | 250 | | | | | | | | | | | | | | | • | • | |

# RETAINING PLATE FOR SADDLE FLANGE
# CABLE TIE PLIERS

**2480.081.00.057.**

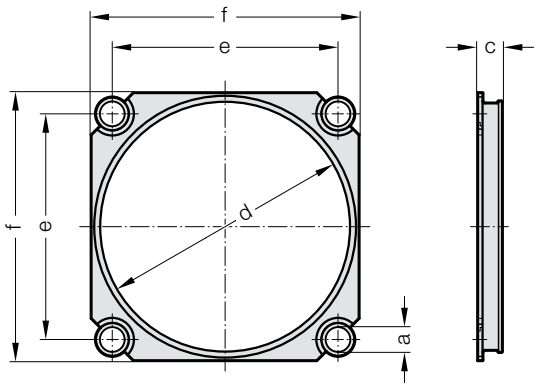


**Mounting example**

## 2480.081.00.057. Retaining plate for saddle flange

| Order No | Tube-ø | a | c | d | e | f |
|---|---|---|---|---|---|---|
| 2480.081.00.057.095 | 95 | 12 | 12 | 96.2 | 92 | 110 |
| 2480.081.00.057.120 | 120 | 12 | 12 | 121.2 | 109.5 | 130 |
| 2480.081.00.057.150 | 150 | 16 | 11 | 151.2 | 138 | 162 |

**Description:**
When the gas spring is mounted with a saddle flange, an additional retainer plate can be used. The retainer plate is mounted on the upper side of the saddle flange with fastening screws.

**Material:**
Retainer plate: Plastic Discs: Steel

**Attention:**
The retainer plate is determined by the cylinder tube diameter of the gas spring.

---

## 2480.081.00.007 Cable tie pliers

**Description:**
We recommend to use a cable tie plier (tong) to mount the cable ties

**Note:**
Order Number for spare part cable ties
2480.081.00.006.1 (piston rod)
2480.081.00.006.2 (gas spring housing)

| | |
|---|---|
| Minimum tensile strength: | 220 up to 540 N |
| Cable tie width: | 4,8 up to 7,6 mm |
| Stroke length: | 25,4 mm |

# GAS SPRINGS - CONNECTOR SYSTEMS
# GENERAL

Connecting gas springs in one more systems enables the user to monitor gas spring pressure from outside the tool, to adjust it if necessary, to fill it and to drain it. The connector system has many advantages including ease of maintenance, reliability and improvement in the quality of gas spring use in the tool. FIBRO offers four different systems for hose connections for gas springs: Minimess system, Compression fitting system, JIC system (24° flare) and Micro connector system.
The hoses, screwed connectors and other components are selected to meet the most stringent standards and undergo a series of tests including service life, static steel and robustness after repeated assembly and disassembly..

## Minimess-system 2480.00.23./24.

+ Small external hose diameter ∅5 mm
+ Small bending radius Rmin = 20
+ High pressure resistance
+ Vibration-proof measurement couplings
+ Connector with valve
+ No tools needed for connecting hose to adapter, and disconnecting
± Swaged non-detachable hose fitting
– Not for use with a pressure reservoir

**Technical data:**

| | |
|---|---|
| Hose: | Polyamide 11, black, dimpled |
| Hose fittings: | Free cutting steel, zinc-plated |
| Measuring couplings: | Free cutting steel, zinc-plated |
| Adapter: | Steel, burnished |
| Max. permi. pressure: | 630 bar |
| Temperature range: | 0–100°C |

**Recommended application:**
Most commonly used system for all gas springs with $G^1/_8$ gas connection.
Not suitable for use with a pressure reservoir due to small internal diameter (reduced flow volume).

## Cutting ring system 2480.00.10.

+ Assemble on-site system
+ Reusable hose fitting
+ High pressure resistance
± Suitable for connecting to a pressure reservoir under certain conditions
– Larger bending radius Rmin = 40
– Not suitable for gas springs with M6 connection thread
– Extra time required for preparing hose and fitting it

**Technical data:**

| | |
|---|---|
| Hose: | Polyurethane/polyamide, black, dimpled |
| Hose fittings: | Steel, zinc-plated |
| Adapter: | Steel, zinc-plated |
| Max. permi. pressure: | 380 bar |
| Temperature range: | 0–100°C |

**Recommended application:**
For all gas springs with $G^1/_8$ gas connection.
Mainly used for self-assembly in small numbers.

## 24°-cone-system 2480.00.25./26.

+ Suitable for connecting to a pressure reservoir
+ Wide range of connection adapters
+ Vibration-proof (O-ring seal)
+ High pressure resistance
± Swaged non-detachable hose fitting
– Larger bending radius Rmin = 40
–Not suitable for gas springs with M6 connection thread

**Technical data:**

| | |
|---|---|
| Hose: | Polyurethane/polyamide, black, dimpled |
| Hose fittings: | Steel, zinc-plated |
| Adapter: | Steel, zinc-plated |
| Max. permi. pressure: | 315 bar |
| Temperature range: | 0–100°C |

**Recommended application:**
For all gas springs with $G^1/_8$ gas connection.
Mainly used for connection to pressure reservoir.

## Connector system, 24° conus micro 2480.00.27./28.

+ small external hose diameter ∅5 mm
+ flexible pipe: small bending radius Rmin = 20 mm
+ pipe: Min. bending radius = 12 mm (3x da)
+ high pressure resistance
+ small connection fitting
+ vibration-proof due to O-ring seal
+ swaged non-detachable hose fitting
- not for use with a pressure reservoir
- limited suitability for gas springs with thread connection $G^1/_8$

**Recommended application:**
For gas springs with M6 gas connection.
Not suitable for use with a pressure reservoir due to small internal diameter (reduced flow volume).

**Technical data:**

| | |
|---|---|
| Hose: | Polyamide 11, black, dimpled |
| Hose adapter: | Free cutting steel, zinc-plated |
| Adapter: | Steel, zinc-plated |
| Max. permi. pressure: | 475 bar |
| Temperature range: | 0 to +80°C |
| Conduit: | Steel |
| External conduit diameter (da): | ∅4 mm |
| Internal conduit diameter (di): | ∅2 mm |
| max. dynamic pressure: | 430 bar |
| Temperature range: | 0 to +100°C |

Note: Pipe system, 24° conus micro for higher temps on request.

# INSTRUCTIONS FOR HOSE ASSEMBLY MOUNTING ARRANGEMENT FOR GAS SPRINGS IN THE MINIMESS SYSTEM

Never exceed the maximum pressures and temperatures for the hoses. Ensure that all hoses and adaptors are perfectly clean prior to assembly. The sheathing of the hoses must be perforated so that they can be used for pressurised gas. We recommend the use of the 24° cone hose system if pressure vessels are used to avoid restricting gas flow.
Follow the instructions below to ensure functionality and maximum service life for the hose connection:

1 Select a hose length to provide a certain amount of play.

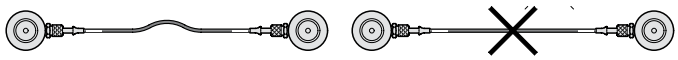

2 The longitudinal marking on the hose must not be twisted during assembly.

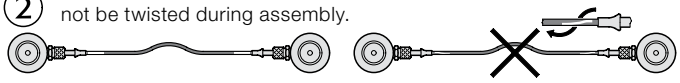

3 Use only hose fittings which prevent kinks forming in the hose.

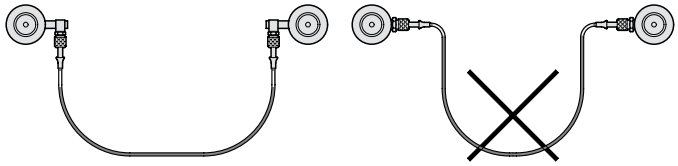

4 Any bends in the hose must always have the recommended minimum radius, as detailed in the catalogue.

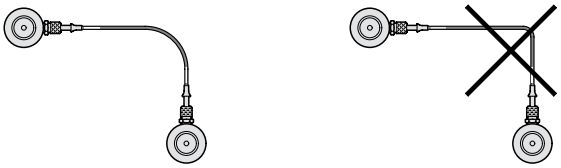

5 The hose must be connected correctly to avoid mechanical damage.

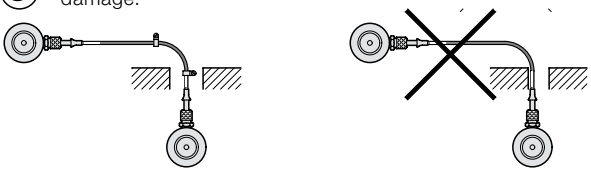

Refer to DIN 20066 for further details on installing hose connections.
**Attention!**
Any modifications whatsoever to the product are prohibited.
For further information refer to the FIBRO Gas Spring Catalogue, visit www.fibro.com or contact your FIBRO agent.

---

**2480. Connection 1:**

Direct connection for group

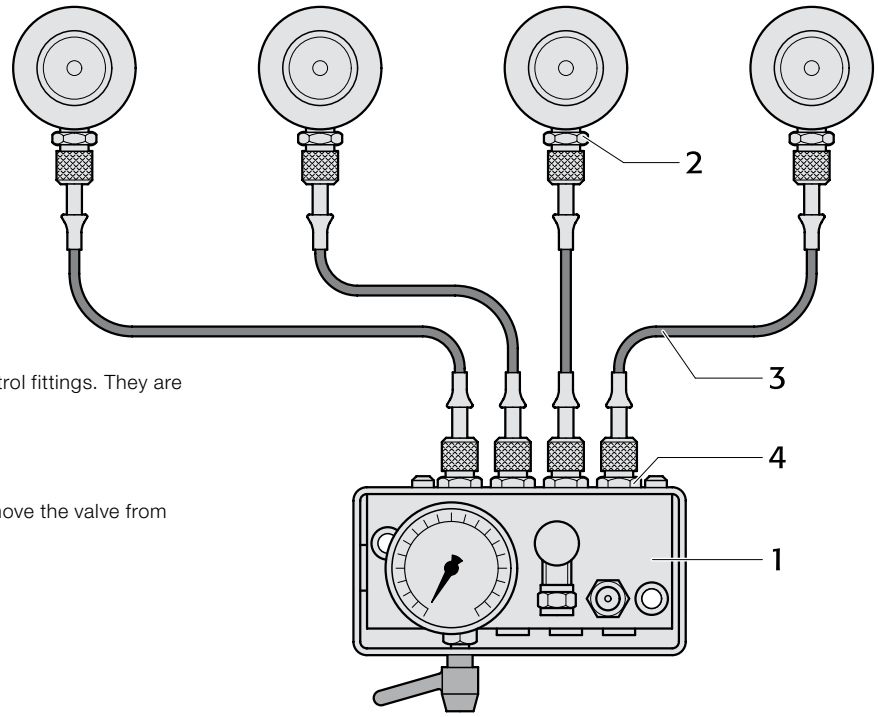


**Function:**

Each spring is connected via a direct wire to the control fittings. They are not interconnected and form a pressure zone.
See control fittings 2480.00.30

**Note:**

When installing gas springs in the system always remove the valve from the gas spring.

| Item No. | Term | Quantity | Order No. | Note |
|---|---|---|---|---|
| 1 | Control fitting | 1 | 2480.00.30.01 | Optionally with diaphragm pressure switch 2480.00.30.02 |
| 2 | Gauging coupling | 4 | 2480.00.24.01 | |
| 3 | Gauging hose | 4 | 2480.00.23.□□.□□□ | Type of connection and length as required |
| 4 | Gauging coupling | 4 | 2480.00.24.02 | |

# MOUNTING ARRANGEMENT FOR GAS SPRINGS IN THE MINIMESS SYSTEM

**2480. Connection 2:**

Group series connection

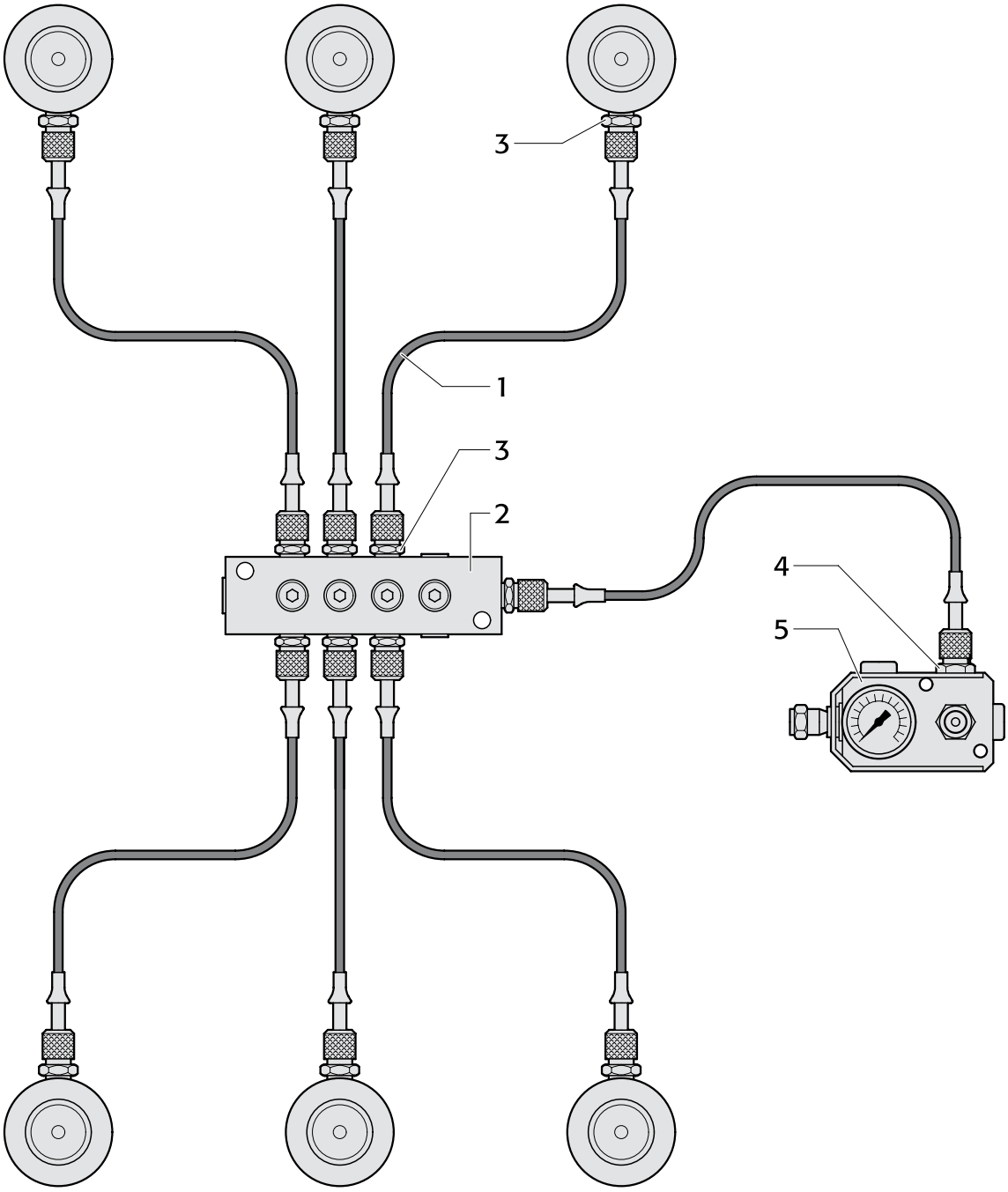


**Function:**

The springs are interconnected and there is just one test line to the control fitting.

**Note:**

When installing gas springs always remove the valve from the gas spring.

| Item No. | Term | Quantity | Order No. | Note |
|---|---|---|---|---|
| 1 | Gauging hose | 7 | 2480.00.23.□□.□□□ | Type of connection and length as required |
| 2 | Distributor | 1 | 2480.00.24.33 | |
| 3 | Gauging coupling | 13 | 2480.00.24.01 | |
| 4 | Gauging coupling | 1 | 2480.00.24.02 | |
| 5 | Control fitting | 1 | 2480.00.31.01 | |

# MOUNTING ARRANGEMENT FOR GAS SPRINGS IN THE MINIMESS SYSTEM

**2480. Connection 3:**

Multiple connections with independent functioning

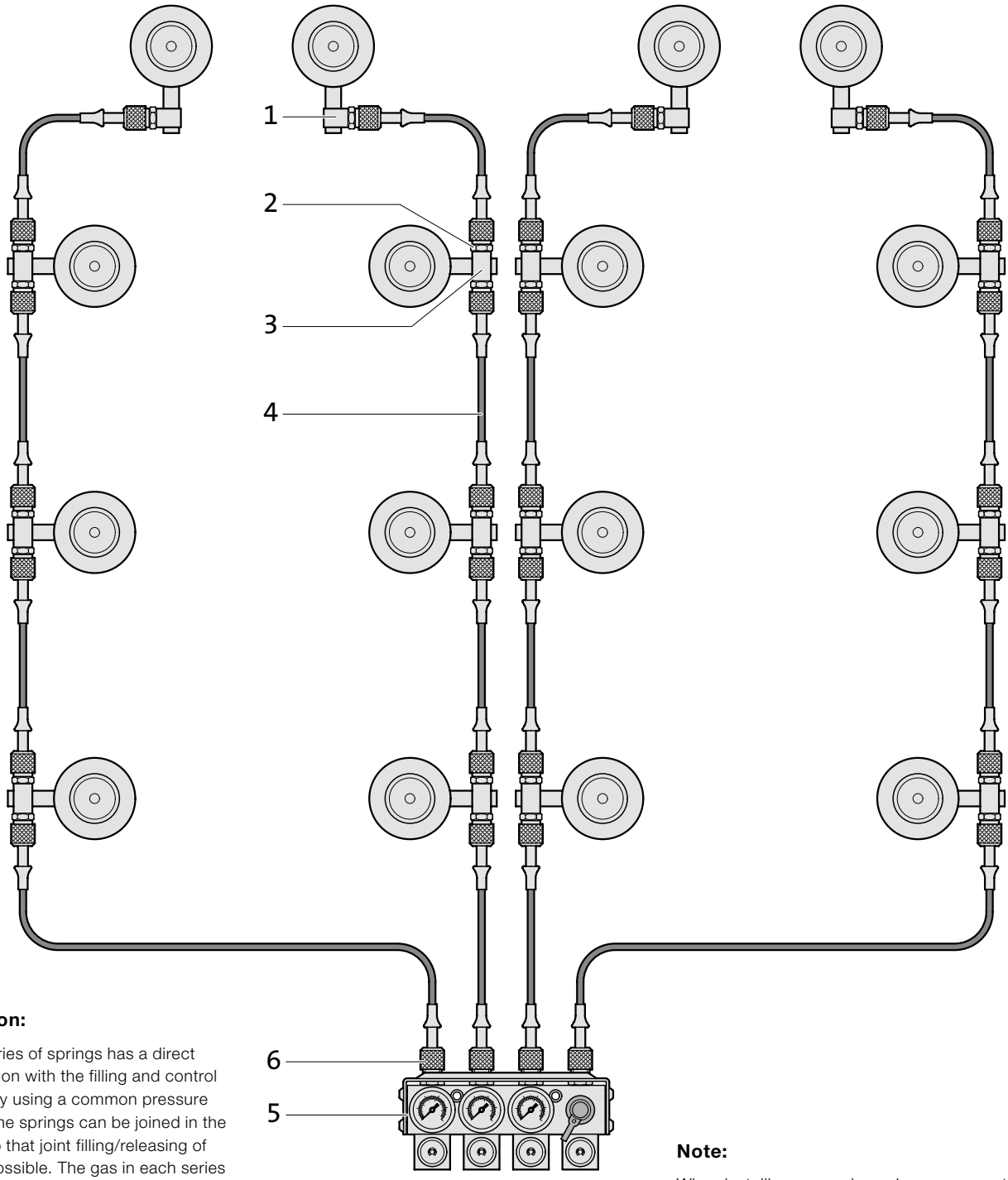


**Function:**

Each series of springs has a direct connection with the filling and control fitting. By using a common pressure supply the springs can be joined in the fitting so that joint filling/releasing of gas is possible. The gas in each series of springs can also be filled/released or monitored individually.
See multi-way control fitting 2480.00.39.05.04

**Note:**

When installing gas springs always remove the valve from the gas spring.

| Item No. | Term | Quantity | Order No. | Note |
|---|---|---|---|---|
| 1 | Simple adaptor, short | 4 | 2480.00.24.17 | Choice of "long" or "very long" depending on the specific mounting arrangements. |
| 2 | Gauging coupling | 28 | 2480.00.24.01 | |
| 3 | Multiple adapter | 12 | 2480.00.24.11 | Choice of "long" or "very long" depending on the specific mounting arrangements. |
| 4 | Gauging hose | 16 | 2480.00.23.□□.□□□ | Type of connection and length as required |
| 5 | Multiple control fitting | 1 | 2480.00.39.05.04 | |
| 6 | Gauging coupling | 4 | 2480.00.24.01 | |

# MOUNTING ARRANGEMENT FOR GAS SPRINGS IN THE MINIMESS SYSTEM

**2480. Connection 4.1:**

Group series connection

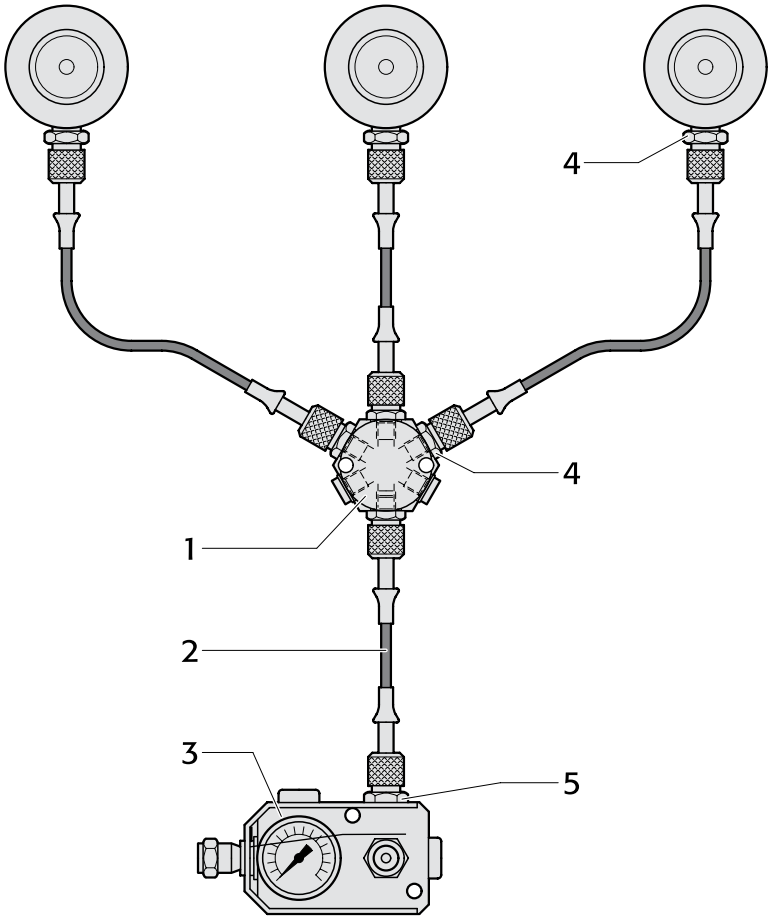


**Function:**

The springs are interconnected and there is just one test line to the control fitting.

**Note:**

When installing gas springs always remove the valve from the gas spring.

| Item No. | Term | Quantity | Order No. | Note |
|---|---|---|---|---|
| 1 | Coupling | 1 | 2480.00.24.31 | |
| 2 | Gauging hose | 4 | 2480.00.23.□□.□□□ | Type of connection and length as required |
| 3 | Control fitting | 1 | 2480.00.31.01 | |
| 4 | Gauging coupling | 7 | 2480.00.24.01 | |
| 5 | Gauging coupling | 1 | 2480.00.24.02 | |

**2480. Connection 4.2:**

Group series connection

**Function:**

The springs are interconnected and there is just one test line to the control fitting.

**Note:**

When installing gas springs always remove the valve from the gas spring.

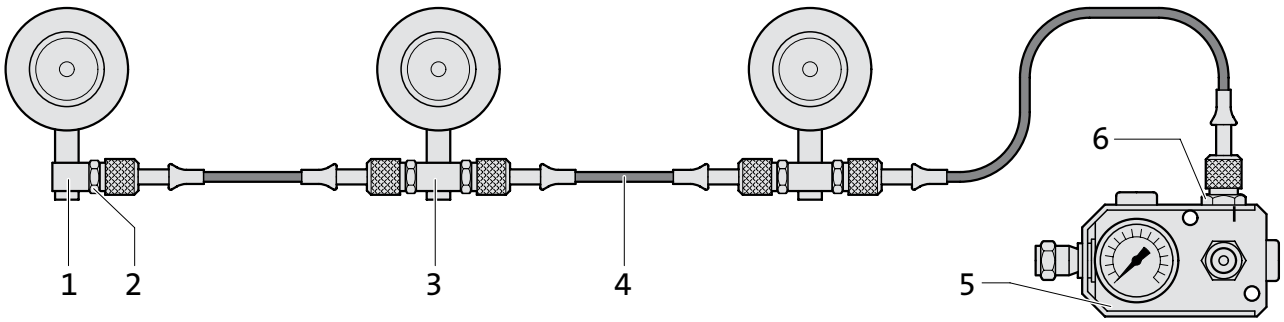


| Item No. | Term | Quantity | Order No. | Note |
|---|---|---|---|---|
| 1 | Simple adaptor, short | 1 | 2480.00.24.17 | Choice of "long" or "very long" depending on the specific mounting arrangements. |
| 2 | Gauging coupling | 5 | 2480.00.24.01 | |
| 3 | Multiple adapter | 2 | 2480.00.24.11 | Choice of "long" or "very long" depending on the specific mounting arrangements. |
| 4 | Gauging hose | 3 | 2480.00.23.□□.□□□ | Type of connection and length as required |
| 5 | Control fitting | 1 | 2480.00.31.01 | |
| 6 | Gauging coupling | 1 | 2480.00.24.02 | |

# MOUNTING ARRANGEMENT FOR GAS SPRINGS IN THE MINIMESS SYSTEM

**2480. Connection 5:**

Independent test connection

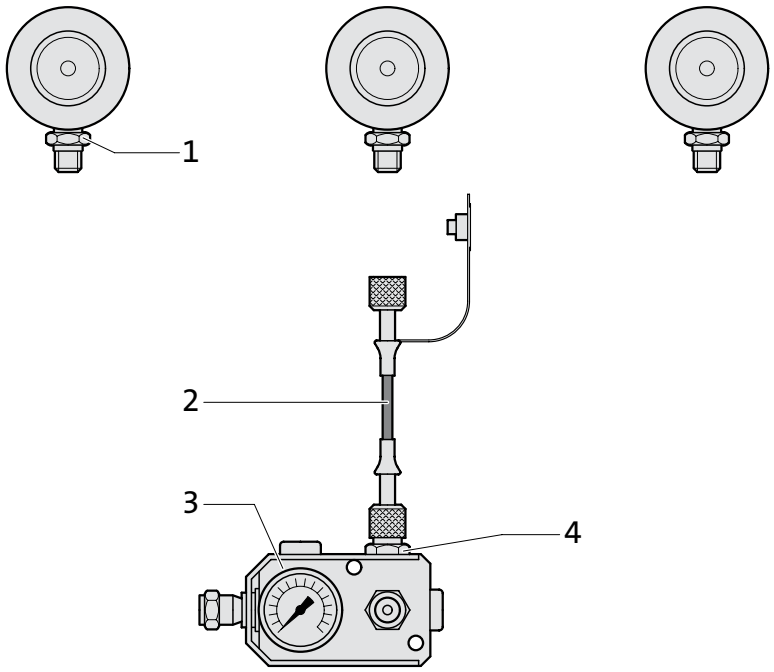


**Function:**

The springs work independently and have a gauging coupling (2480.00.24.01) with valve. If required the springs can be tested and pressure adjusted individually. A control fitting (2480.00.31.01) is used for the purpose.

| Item No. | Term | Quantity | Order No. | Note |
|---|---|---|---|---|
| 1 | Gauging coupling | 3 | 2480.00.24.01 | |
| 2 | Gauging hose | 1 | 2480.00.23.□□.□□□ | Type of connection and length as required |
| 3 | Control fitting | 1 | 2480.00.31.01 | |
| 4 | Gauging coupling | 1 | 2480.00.24.02 | |

# GAS SPRING ACCESSORIES
# MINIMESS – COMPOUND THREADED JOINTS

## 2480.00.23.01.

Gauging hose -
both ends straight

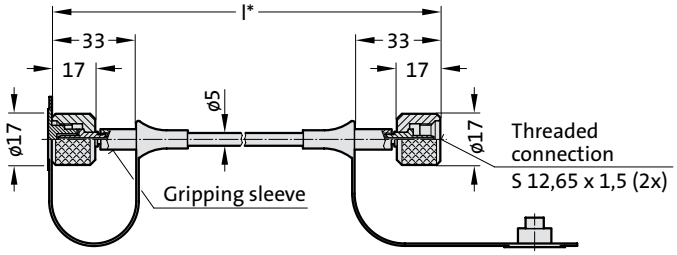


**2480.00.23.01.**

**Gauging hose both ends straight**

**Order example:**
Shortest factory length:
90 mm excl. bend protection
150 mm bend protection on one side
300 mm bend protection on both sides
Minimum bending radius: R20

*Measuring hose available in the following lengths:
5 mm step range ≤ 1000 mm
10 mm step range > 1000 mm
100 mm step range > 4000 mm
500 mm step range > 6000 mm

## 2480.00.23.01.----.1

Antikink spiral, at one end

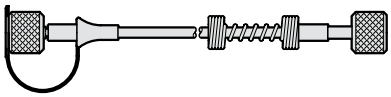

## 2480.00.23.01.----.2

Antikink spiral, at both ends

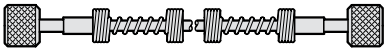

**Ordering Code (example):**

| | | | | | |
|---|---|---|---|---|---|
| Gauging hose both ends straight | = 2480.00.23.01. | | Gauging hose both ends straight | = 2480.00.23.01. | |
| l = 90 mm | = | 0090 | l = 90 mm | = | 0090. |
| | | | Bend protection on one side | = | 1 |

## 2480.00.23.02.

Gauging hose -
one end straight
90°-angle

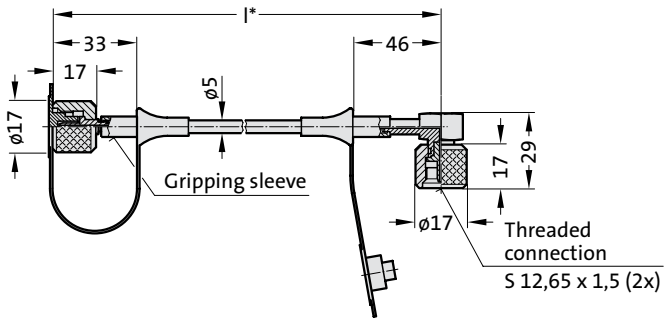


**2480.00.23.02.**

**Gauging hose one end straight 90°-angle**

**Order example:**
Shortest factory length:
90 mm excl. bend protection
150 mm bend protection on one side
300 mm bend protection on both sides
Minimum bending radius: R20

*Measuring hose available in the following lengths:
5 mm step range ≤ 1000 mm
10 mm step range > 1000 mm
100 mm step range > 4000 mm
500 mm step range > 6000 mm

## 2480.00.23.02.----.1

Antikink spiral, at one end, straight

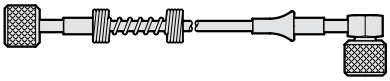

## 2480.00.23.02.----.2

Antikink spiral, at both ends

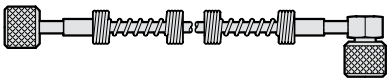

## 2480.00.23.02.----.3

Antikink spiral, at one end, 90°

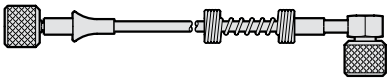

**Ordering Code (example):**

| | | | | | |
|---|---|---|---|---|---|
| Gauging hose one end straight 90°-angle | = 2480.00.23.02. | | Gauging hose one end straight 90°-angle | = 2480.00.23.02. | |
| l = 90 mm | = | 0090 | l = 90 mm | = | 0090. |
| | | | Bend protection on one side | = | 1 |



subject to alterations

# GAS SPRING ACCESSORIES
# MINIMESS – COMPOUND THREADED JOINTS

**2480.00.23.03.**

**Gauging hose both ends 90°-angle**

**Order example:**
Shortest factory length:
90 mm excl. bend protection
150 mm bend protection on one side
300 mm bend protection on both sides
Minimum bending radius: R20

*Measuring hose available in the following lengths:
5 mm step range ≤ 1000 mm
10 mm step range > 1000 mm
100 mm step range > 4000 mm
500 mm step range > 6000 mm

## 2480.00.23.03.

Gauging hose - both ends 90°-angle

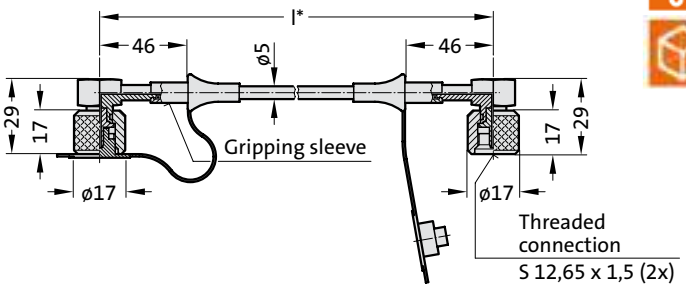


## 2480.00.23.03.----.3

Antikink spiral, at one end

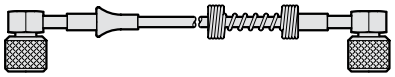

## 2480.00.23.03.----.2

Antikink spiral, at both ends

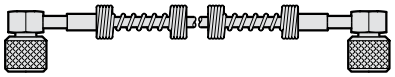

**Ordering Code (example):**

| | | | | | |
|---|---|---|---|---|---|
| Gauging hose both ends 90°-angle | = 2480.00.23.03 | | Gauging hose both ends 90°-angle | = 2480.00.23.03. | |
| l = 90 mm | = | 0090 | l = 90 mm | = | 0090. |
| | | | Bend protection on one side | = | 3 |

**2480.00.23.12.01**

Hose clamp for gauging hose DN2 (∅5 mm)

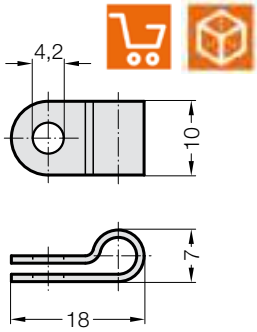


**Material:** Polyamide

**Note:**
Supplied without screws

**2192.50.04.012**

Self-tapping screw
A M4x12 DIN 7516

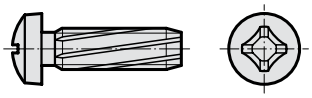

**Note:**
self-tapping
Diameter of hole for self-tapping screw = 3.6 mm

**2480.00.23.13.**

Anti-scuff spiral
for subsequent installation over hoses and tubing

| Order No. | l in mm |
|---|---|
| 2480.00.23.13.0001 | 1000 |
| 2480.00.23.13.0002 | 2000 |
| 2480.00.23.13.0005 | 5000 |
| 2480.00.23.13.0010 | 10000 |

| | |
|---|---|
| Inner ø | 7 mm |
| For hose external ø | max. 5-11 mm |
| Temperature range | -30°C up to +100°C |

**Material:**
Polyamide
**Description:**
The anti-scuff spiral is used to protect against abrasion, is resistant to air, water, oil, hydraulic fluids petrol and other liquids.

# GAS SPRING ACCESSORIES
# MINIMESS – COMPOUND THREADED JOINTS

Gauging coupling
**2480.00.24.01 with valve**

**2480.00.24.03 without valve for connection to gas springs**

Gauging coupling
**2480.00.24.02 with valve**

**2480.00.24.04 without valve for connection to control fitting**

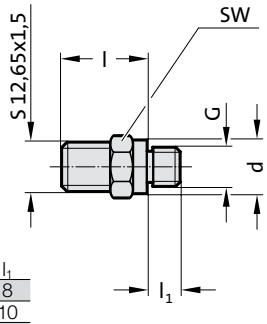


| Order No. | G | d | SW | l | $l_1$ |
|---|---|---|---|---|---|
| 2480.00.24.01 | G 1/8 | 14 | 14 | 22 | 8 |
| 2480.00.24.02 | G 1/4 | 19 | 19 | 21 | 10 |
| 2480.00.24.03 | G 1/8 | 14 | 14 | 22 | 8 |
| 2480.00.24.04 | G 1/4 | 19 | 19 | 21 | 10 |

*SW = spanner size

**Note:**

The measuring coupling with valve is used for standard assembly layouts. Where the system requires frequent filling pressure changes (e.g. die drawing cushions), the measuring coupling is used without a valve.

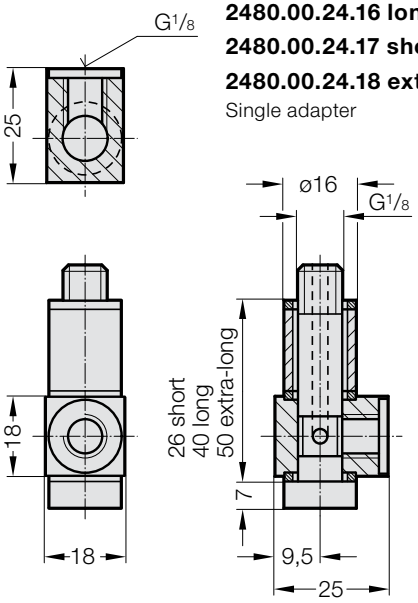


**2480.00.24.16 long**
**2480.00.24.17 short**
**2480.00.24.18 extra-long**
Single adapter

**2480.00.24.13 long**

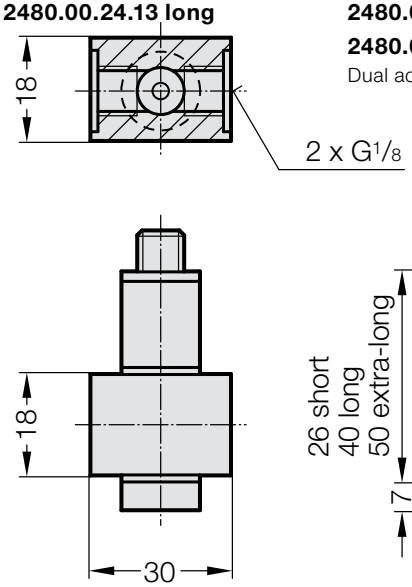


**2480.00.24.14 short**
**2480.00.24.15 extra-long**
Dual adapter

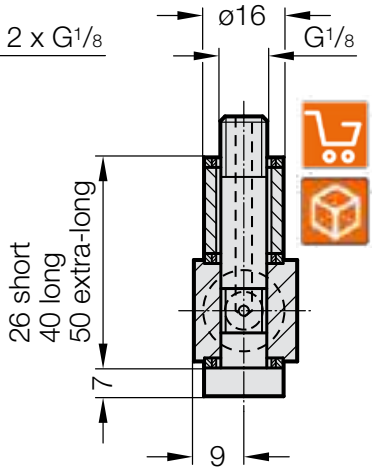


**2480.00.24.10 long**

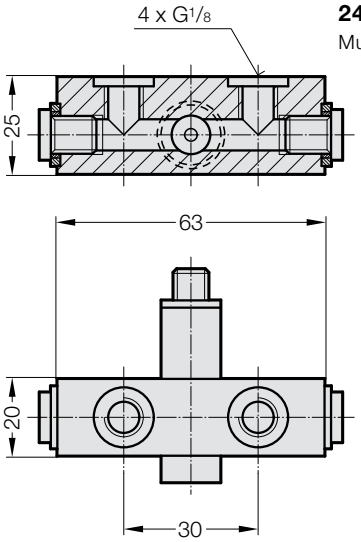


**2480.00.24.11 short**
**2480.00.24.12 extra-long**
Multiple adapter

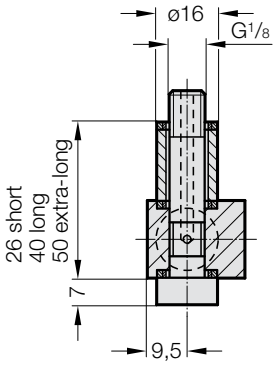


**2480.00.23.12.01**

Hose clamp for gauging hose DN2 (∅5 mm)

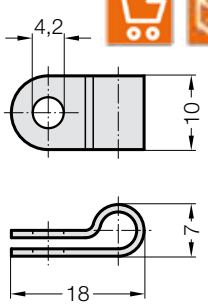


**Material:** Polyamide

**Note:**
Supplied without screws

**2192.50.04.012**

Self-tapping screw
A M4x12 DIN 7516

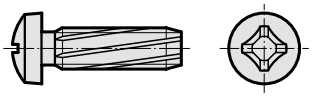

**Note:**
self-tapping
Diameter of hole for self-tapping screw = 3.6 mm

**2480.00.23.13.**

Anti-scuff spiral
for subsequent installation over hoses and tubing

| Order No. | l in mm |
|---|---|
| 2480.00.23.13.0001 | 1000 |
| 2480.00.23.13.0002 | 2000 |
| 2480.00.23.13.0005 | 5000 |
| 2480.00.23.13.0010 | 10000 |

| | |
|---|---|
| Inner ø | 7 mm |
| For hose external ø | max. 5-11 mm |
| Temperature range | -30°C up to +100°C |

**Material:**
Polyamide
**Description:**
The anti-scuff spiral is used to protect against abrasion, is resistant to air, water, oil, hydraulic fluids petrol and other liquids.

# GAS SPRING ACCESSORIES
# MINIMESS – COMPOUND THREADED JOINTS

## 2480.00.24.53 horizontal, long
## 2480.00.24.54 horizontal, short

Double adapter

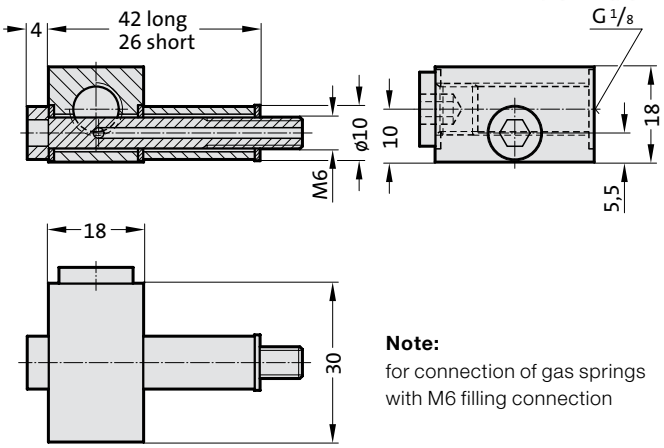


**Note:**
for connection of gas springs with M6 filling connection

## 2480.00.24.56 vertical, long
## 2480.00.24.57 vertical, short

Double adapter

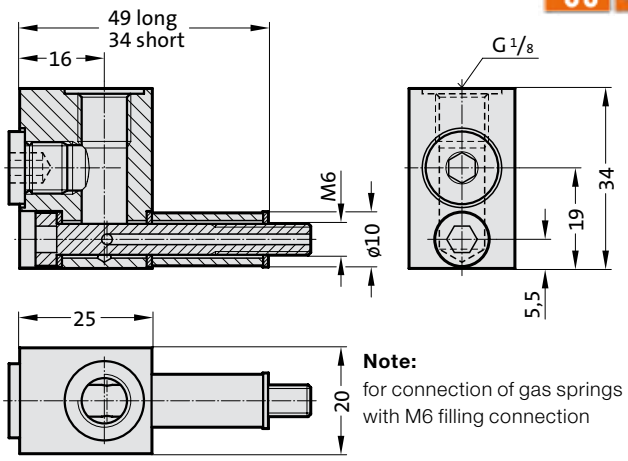


**Note:**
for connection of gas springs with M6 filling connection

## 2480.00.24.43

Connection fitting M6 - G 1/8

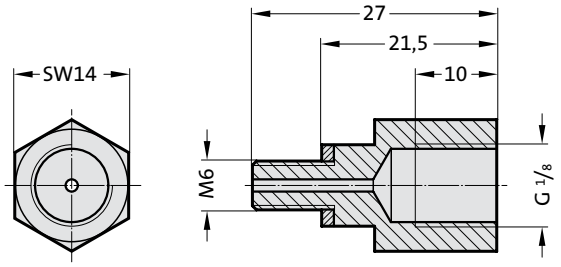


## Mounting example:

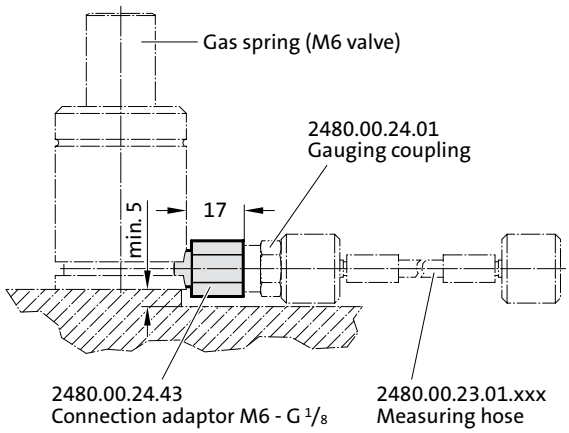

# GAS SPRING ACCESSORIES
# MINIMESS – COMPOUND THREADED JOINTS

**2480.00.24.30**

Distributor block G1/8, 3 ports

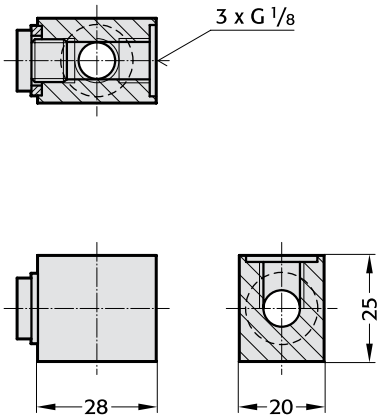


**2480.00.24.34**

Distributor block G1/8, 4 ports

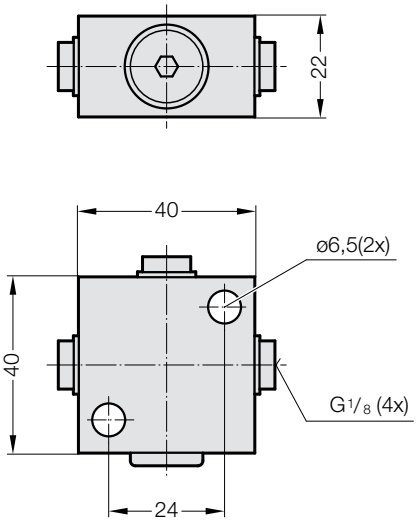


**2480.00.24.31**

Distributor block G1/8, 6 ports

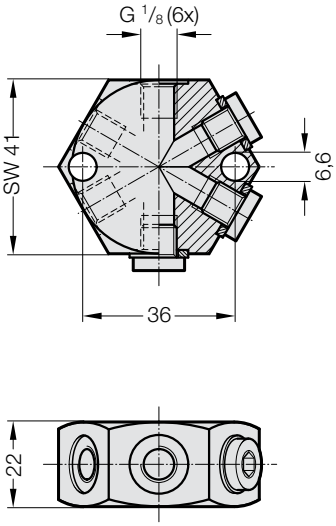


**2480.00.24.33**

Distributor G1/8, 14 ports

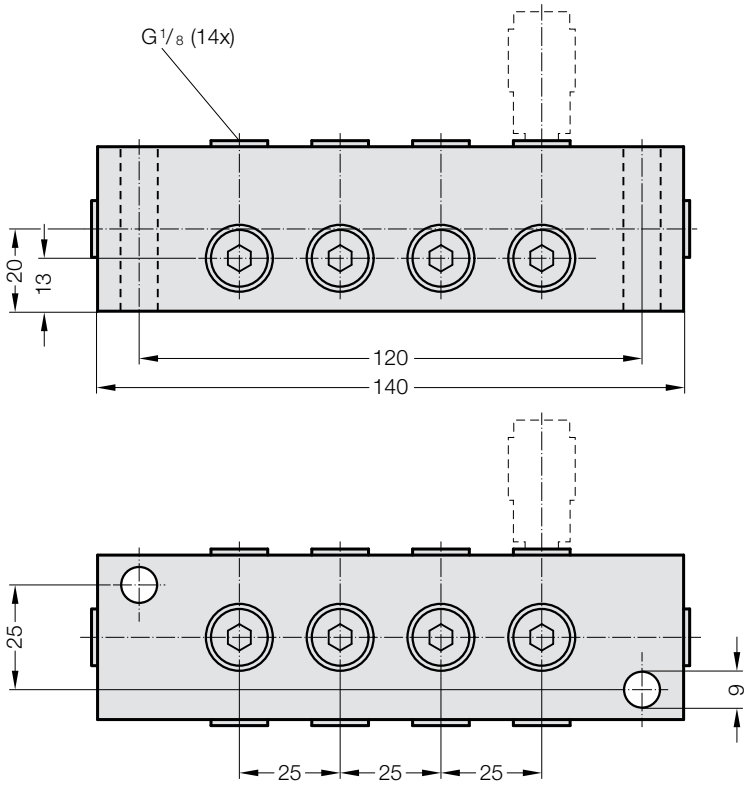


**2480.00.40**

Filling adapter

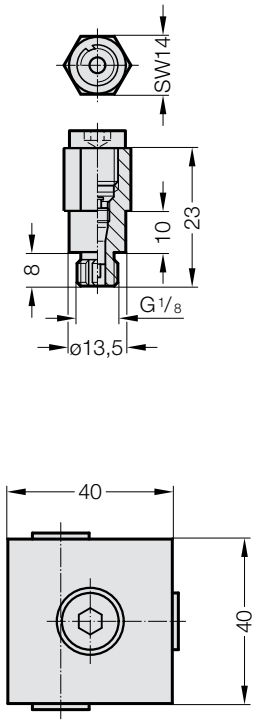




subject to alterations

# GAS SPRING ACCESSORIES
# MINIMESS – COMPOUND THREADED JOINTS

**2480.00.24.01**

Gauging coupling with valve installed

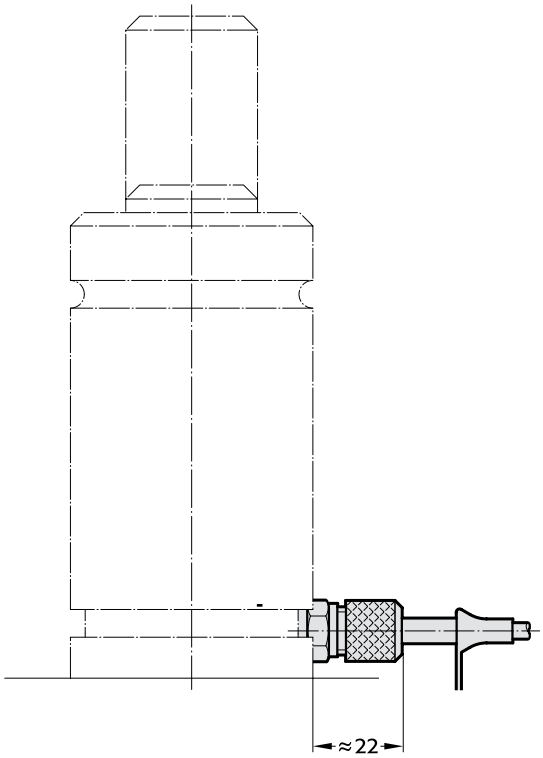


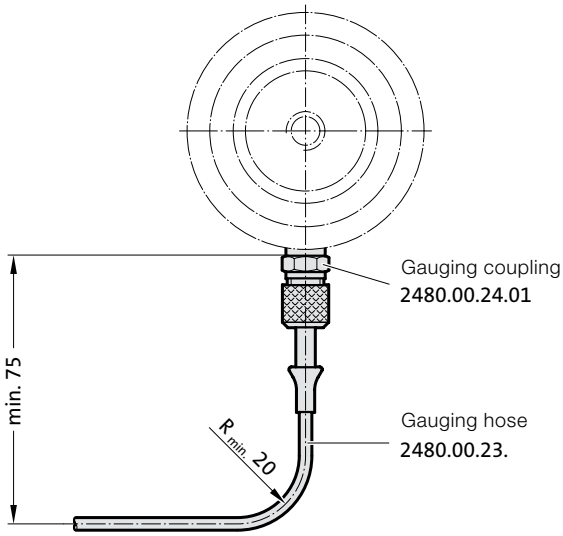


**2480.00.24.10 long**
**11 short**
**12 extra-long**

Multiple adapter with two gauging couplings

**Note:**

When installing or fitting a gauging coupling the valve must be removed from the gas spring.

Execution: Horizontal connection

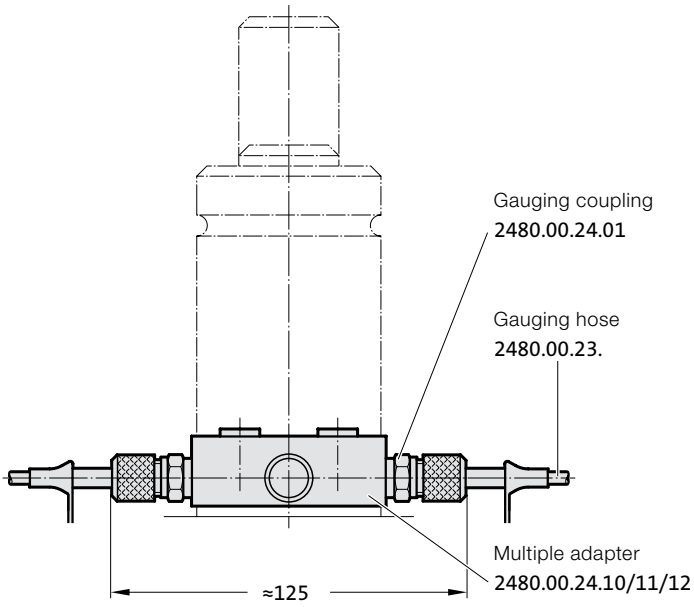


Execution: Vertical connection

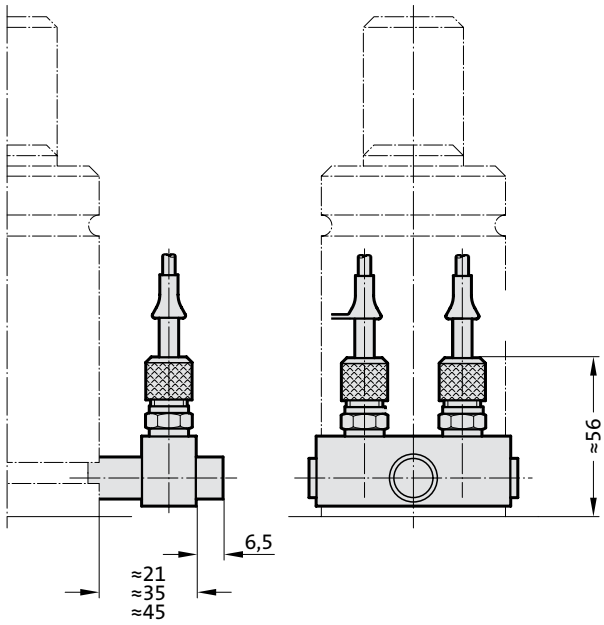

# GAS SPRING ACCESSORIES
# COMPRESSION FITTING – COMPOUND THREADED JOINTS

**2480.00.10.01**

Direct test connection to gas spring

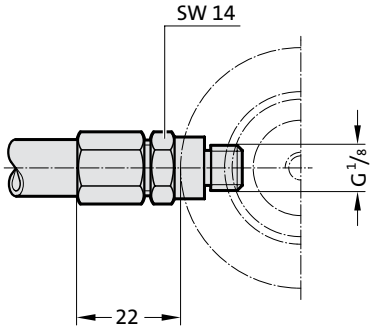


**2480.00.10.03**

Direct test connection to control fitting

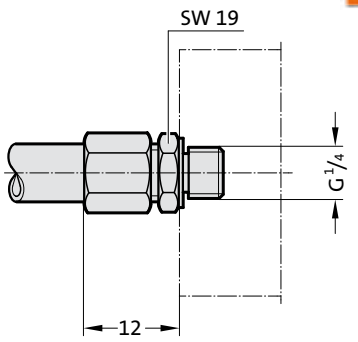


**2480.00.10.10**

Adjustable angular coupling

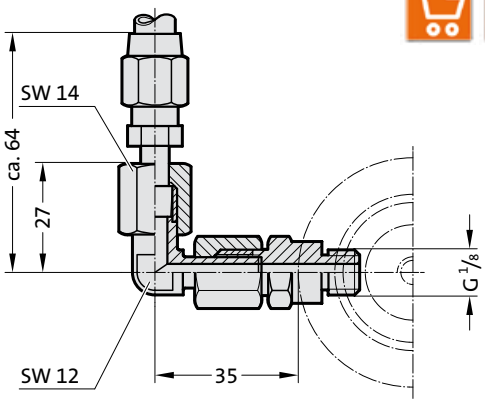


**2480.00.10.11**

Adjustable T-Coupling

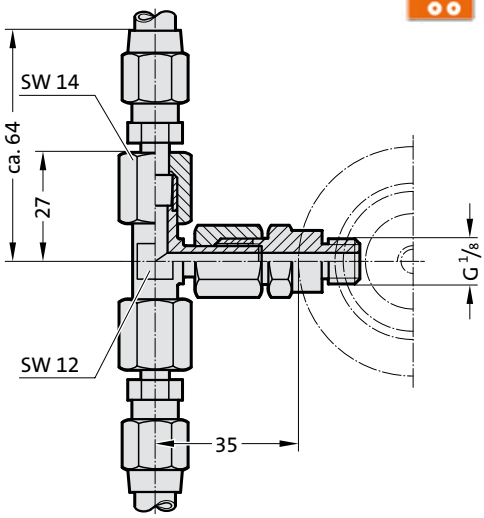


**2480.00.10.12**

Adjustable L-Coupling

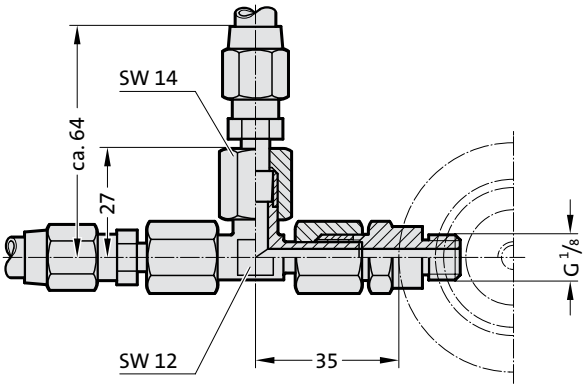

# GAS SPRINGS ACCESSORIES
# COMPRESSION FITTING – COMPOUND THREADED JOINTS

**2480.00.10.20.12.01**
Hose clamp for gauging hose
DN4 (∅ 9 mm)

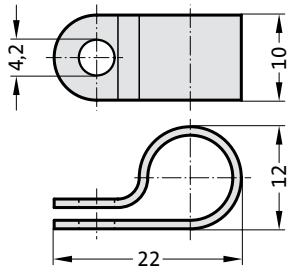


**Material:** Polyamide
**Note:**
Supplied without screws

**2192.50.04.012**
Self-tapping screw
A M4x12 DIN 7516

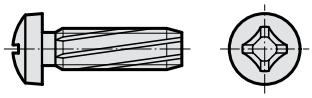

**Note:**
self-tapping,
Diameter of hole for self-tapping screw = 3.6 mm

**2480.00.23.13.**
Anti-scuff spiral
for subsequent installation over hoses and tubing

| Order No. | l in mm |
|---|---|
| 2480.00.23.13.0001 | 1000 |
| 2480.00.23.13.0002 | 2000 |
| 2480.00.23.13.0005 | 5000 |
| 2480.00.23.13.0010 | 10000 |

| | |
|---|---|
| Inner ø | 7 mm |
| For hose external ø | max. 5-11 mm |
| Temperature range | -30°C up to +100°C |

**Material:**
Polyamide
**Description:**
The anti-scuff spiral is used to protect against abrasion, is resistant to air, water, oil, hydraulic fluids petrol and other liquids.

**2480.00.54.01**
Expansion punch for hosing

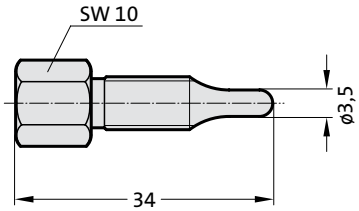


**2480.00.10.20.**
High-pressure hose

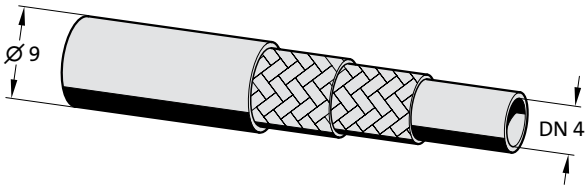


**Ordering Code (example):**

| | | |
|---|---|---|
| High-pressure hose | = | 2480.00.10.20. |
| Length 10 m | = | 0010 |
| Order No. | = | 2480.00.10.20.0010 |

**2480.00.54.02**
Vice jaws for holding high-pressure hose

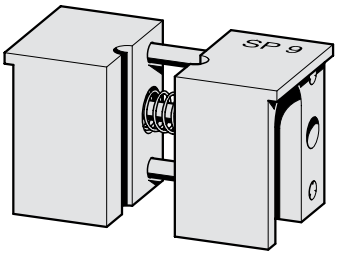


**2480.00.10.21**
Hose screw fitting (female)

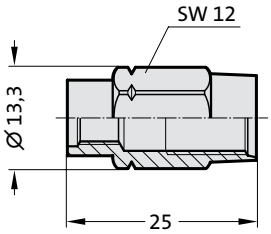


**2480.00.54.03**
Hose shears

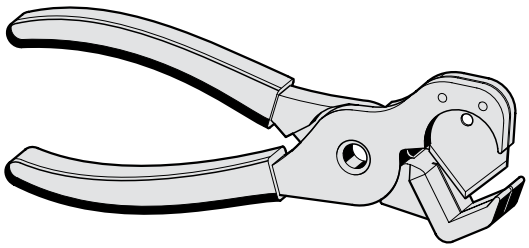

**2480.00.10.22**
Hose screw fitting (male) with flanged pipe socket

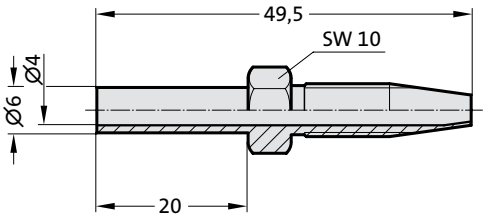

# ASSEMBLY ARRANGENMENT OF GAS SPRINGS IN SERVIAL CONNECTION COMPRESSION FITTING

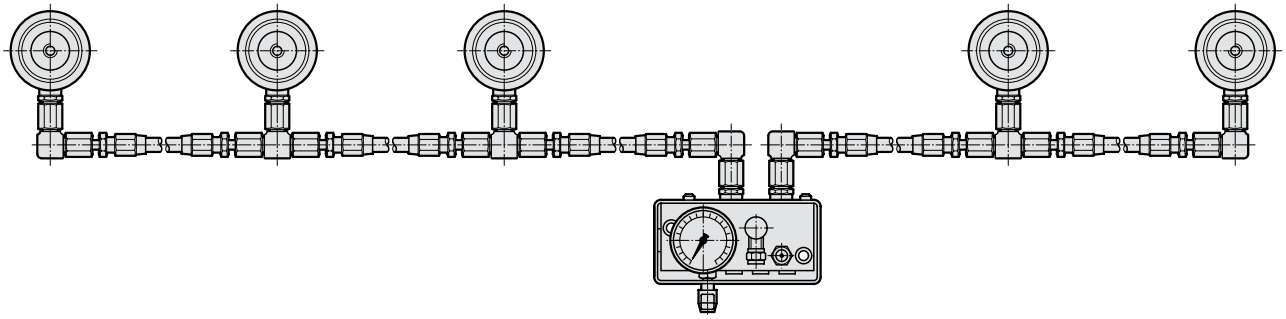

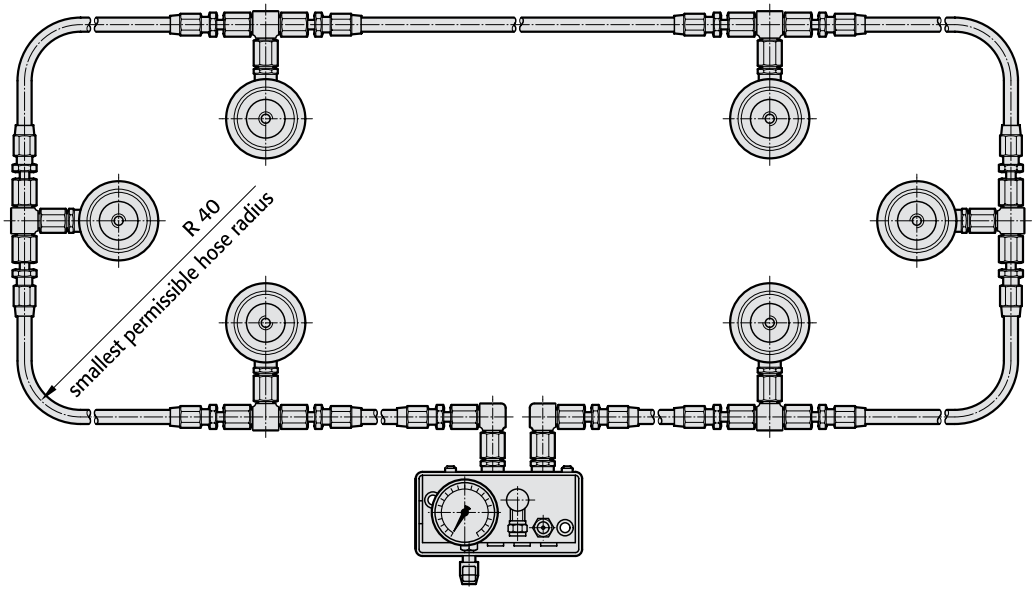


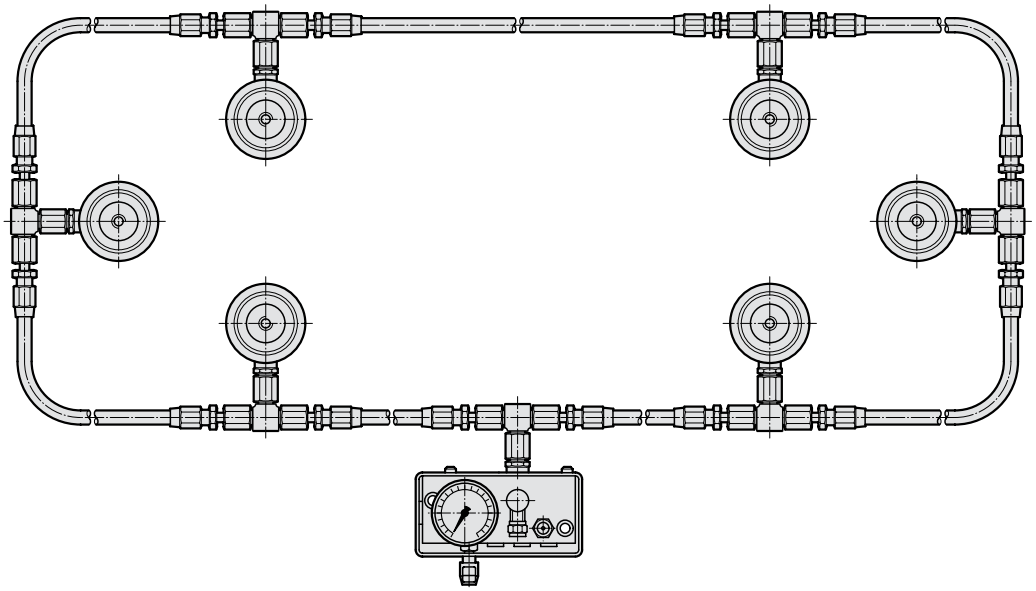

Note: When installing gas springs always remove the valve from the gas spring.

# GAS SPRING ACCESSORIES
# 24°-CONE SCREW CONNECTIONS
# (DIN 2353 / DIN EN ISO 8434-1)

**2480.00.26.03**

Screw connection G1/8

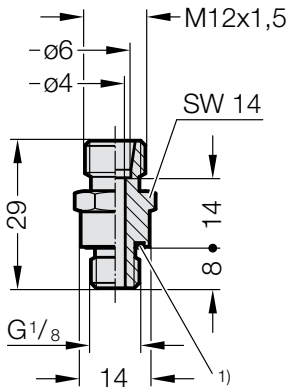


1) Eolastic-Seal ED

**2480.00.26.04**

Screw connection G1/4

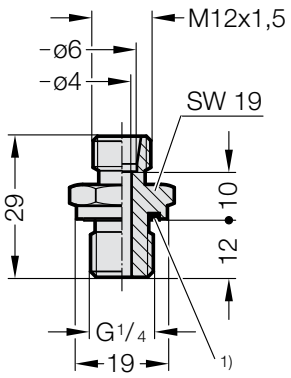


1) Eolastic-Seal ED

**2480.00.26.21**

Adjustable threaded joint 45°, complete

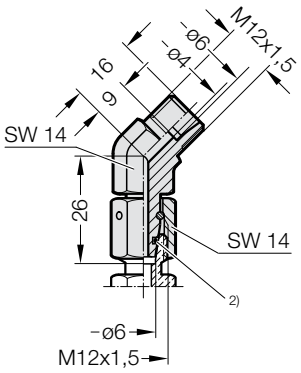


2) O-ring

**2480.00.26.22**

Adjustable threaded joint 90°, complete

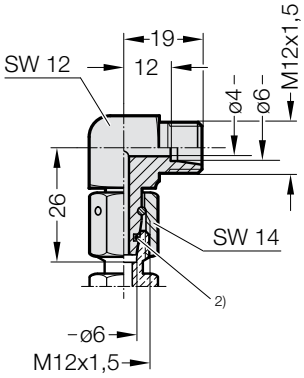


2) O-ring

**2480.00.26.23**

Adjustable L-Coupling, complete

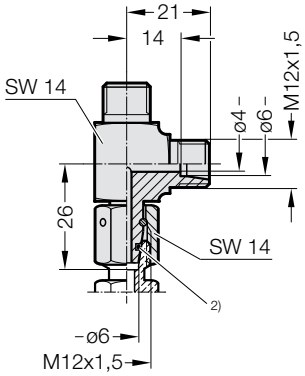


2) O-ring

**2480.00.26.24**

Adjustable T-Coupling, complete

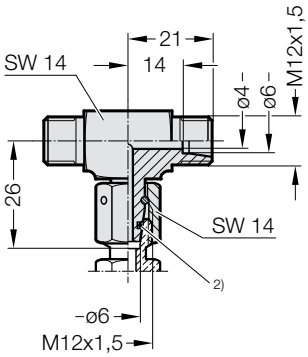


2) O-ring

**2480.00.26.25**

Adapter straight, hose to hose

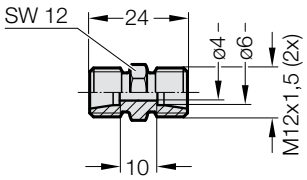


**2480.00.26.26**

Adapter, 90°, hose to hose

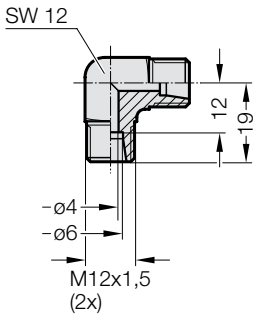


**2480.00.26.27**

Adapter, T, hose to hose

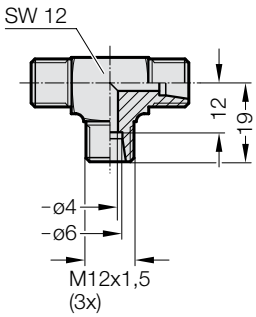


**2480.00.26.28**

Adapter, K, hose to hose

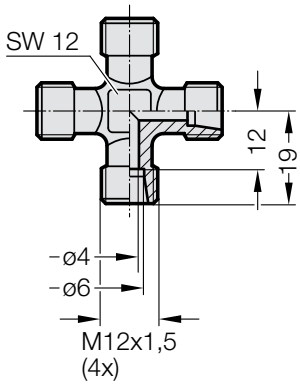

# GAS SPRING ACCESSORIES
# 24°-CONE CONNECTION HOSES
# (DIN 2353 / DIN EN ISO 8434-1)

**2480.00.25.01.**

Hose – conical seals with union nuts and O-Ring (straight/straight)

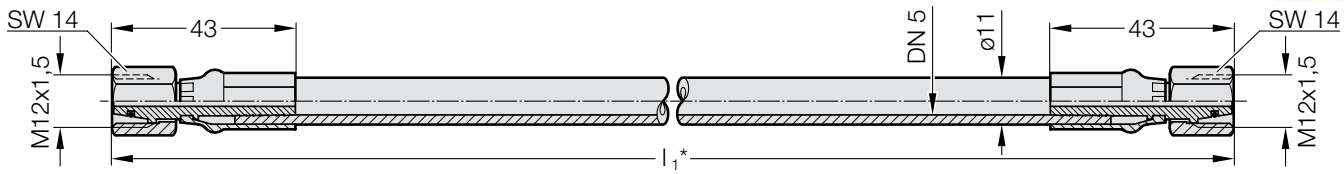


Dimension $l_1$ specified in the order, e.g. 765 mm gives order no. 2480.00.25.01.0765

**2480.00.25.02.**

Hose – conical seals with union nuts an O-Ring (90° bend/straight)

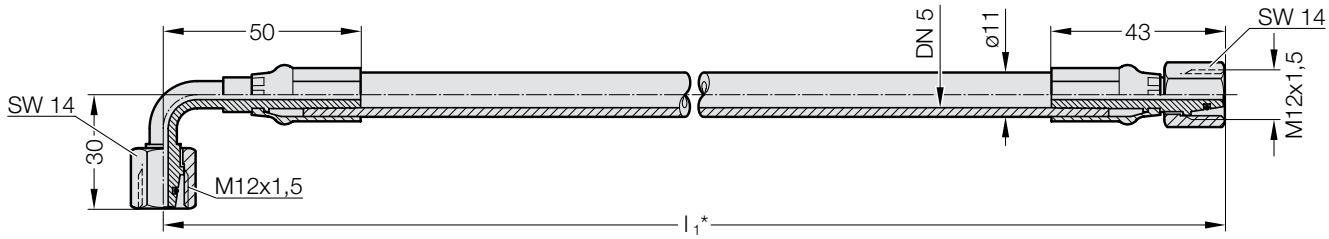


Dimension $l_1$ specified in the order, e.g. 765 mm gives order no. 2480.00.25.02.0765

**2480.00.25.03.**

Hose – conical seals with union nuts and O-Ring (90° bend/both ends)

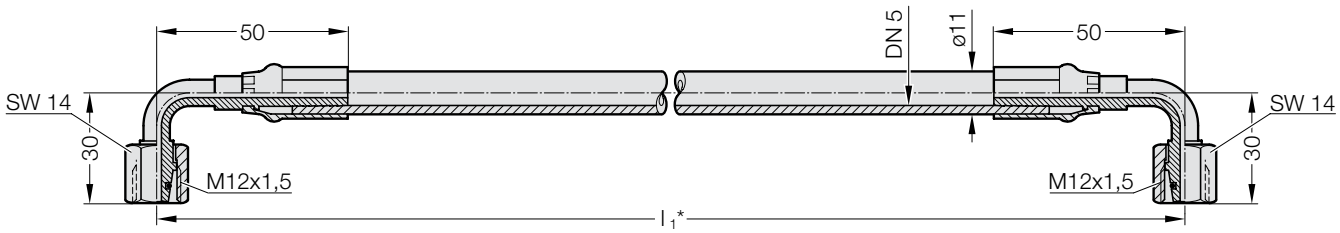


Dimension $l_1$ specified in the order, e.g. 765 mm gives order no. 2480.00.25.03.0765

**2480.00.25.04.**

Hose – conical seals with union nuts and O-Ring (45° bend/straight)

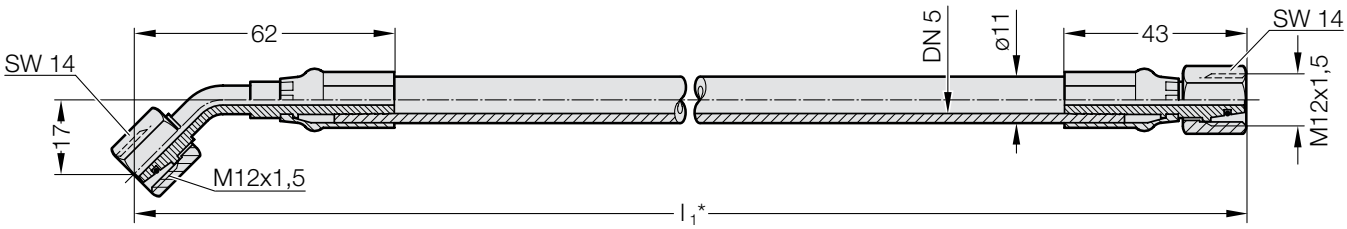


Dimension $l_1$ specified in the order, e.g. 765 mm gives order no. 2480.00.25.04.0765

# GAS SPRING ACCESSORIES
# MINIMESS – COMPOUND THREADED JOINTS

## 2480.00.23.01.

Gauging hose -
both ends straight

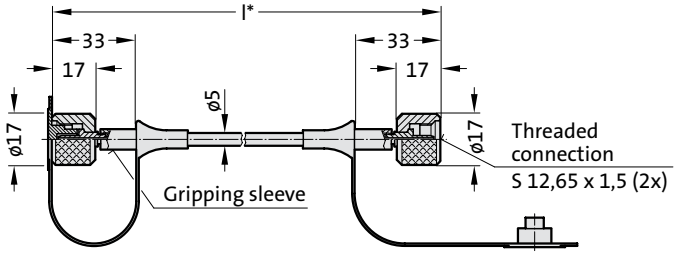


**2480.00.23.01.**

**Gauging hose both ends straight**

**Order example:**
Shortest factory length:
90 mm excl. bend protection
150 mm bend protection on one side
300 mm bend protection on both sides
Minimum bending radius: R20

*Measuring hose available in the following lengths:
5 mm step range ≤ 1000 mm
10 mm step range > 1000 mm
100 mm step range > 4000 mm
500 mm step range > 6000 mm

## 2480.00.23.01.----.1

Antikink spiral, at one end

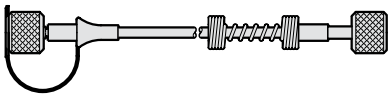

## 2480.00.23.01.----.2

Antikink spiral, at both ends

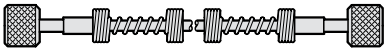

**Ordering Code (example):**

| | | | | | |
|---|---|---|---|---|---|
| Gauging hose both ends straight | = 2480.00.23.01. | | Gauging hose both ends straight | = 2480.00.23.01. | |
| l = 90 mm | = | 0090 | l = 90 mm | = | 0090. |
| | | | Bend protection on one side | = | 1 |

## 2480.00.23.02.

Gauging
one end aight
90°-angle

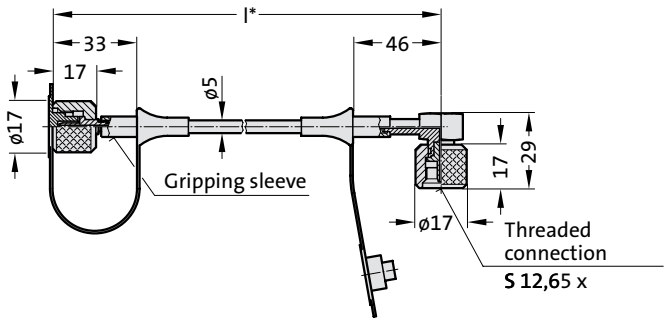


**2480.00.23.02.**

**Gauging hose one end straight 90°-angle**

**Order example:**
Shortest factory length:
90 mm excl. bend protection
150 mm bend protection on one side
300 mm bend protection on both sides
Minimum bending radius: R20

*Measuring hose available in the following lengths:
5 mm step range ≤ 1000 mm
10 mm step range > 1000 mm
100 mm step range > 4000 mm
500 mm step range > 6000 mm

## 2480.00.23.02.----.1

Antikink spiral, at one end aight

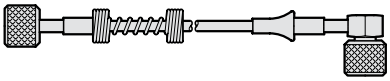

## 2480.00.23.02.----.2

Antikink spiral, at both end

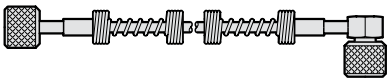

## 2480.00.23.02.----.3

Antikink spiral, at one end

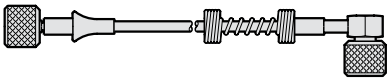

**Ordering Code (example):**

| | | | | | |
|---|---|---|---|---|---|
| Gauging hose one end straight 90°-angle | = 2480.00.23.02. | | Gauging hose one end straight 90°-angle | = 2480.00.23.02. | |
| l = 90 mm | = | 0090 | l = 90 mm | = | 0090. |
| | | | Bend protection on one side | = | 1 |

# GAS SPRINGS ACCESSORIES
# DIRECT CONNECTION DIMENSIONS
# 24°-CONE THREADED JOINT (DIN 2353 / DIN EN ISO 8434-1)

**2480.00.25.12.01**
Hose clamp for gauging hose
DN5 (∅11 mm)

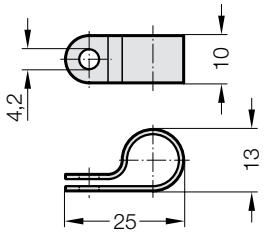


**Material:** Polyamide
**Note:**
Supplied without screws

**2192.50.04.012**
Self-tapping screw
A M4x12 DIN 7516

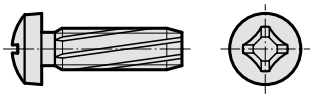

**Note:**
self-tapping,
Diameter of hole for self-tapping screw = 3.6 mm

**2480.00.23.13.**
Anti-scuff spiral
for subsequent installation over hoses and tubing

| Order No. | l in mm |
|---|---|
| 2480.00.23.13.0001 | 1000 |
| 2480.00.23.13.0002 | 2000 |
| 2480.00.23.13.0005 | 5000 |
| 2480.00.23.13.0010 | 10000 |

| | |
|---|---|
| Inner ø | 7 mm max. |
| For hose external ø | 5-11 mm |
| Temperature range | -30°C up to +100°C |

**Material:**
Polyamide
**Description:**
The anti-scuff spiral is used to protect against abrasion, is resistant to air, water, oil, hydraulic fluids petrol and other liquids.

Direct connection
with 45°-elbow adaptor
2480.00.26.21

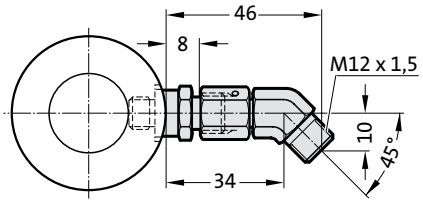


Direct connection
hose straight
adaptor 2480.00.26.03

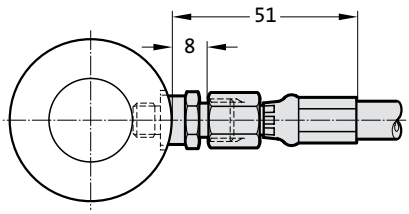


Direct connection
with 90° elbow adapter
2480.00.26.22

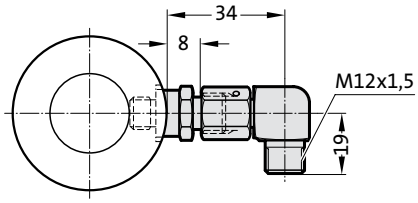


Direct connection
45° hose with
adaptor 2480.00.26.03

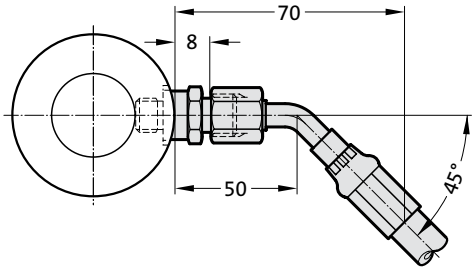


Direct connection
with L-coupling
2480.00.26.23

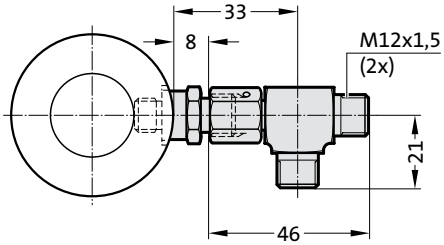


Direct connection
90° hose with
adaptor 2480.00.26.03

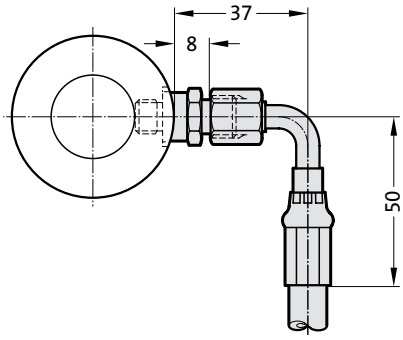


Direct connection
with T-coupling
2480.00.26.24

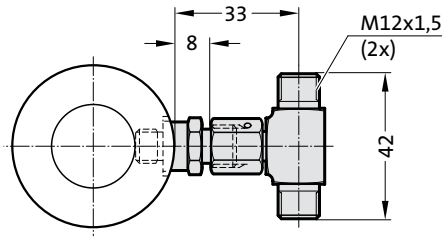

# GAS SPRING ACCESSORIES
# 24°-CONE CONNECTION HOSES
# (DIN 2353 / DIN EN ISO 8434-1)

**2480.00.25.05.** Hose – conical seals with union nuts and O-Ring (45° bend/both ends)

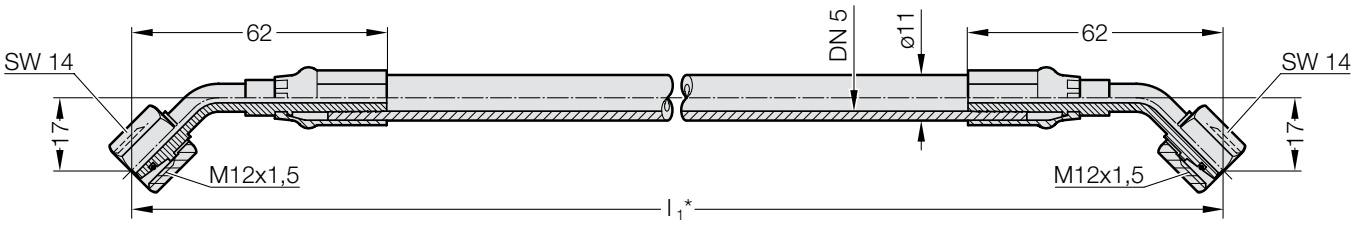


Dimension $l_1$ specified in the order, e.g. 765 mm gives order no. 2480.00.25.05.0765

**2480.00.25.06.** Hose – conical seals with union nuts and O-Ring (45° bend/ 90° bend)

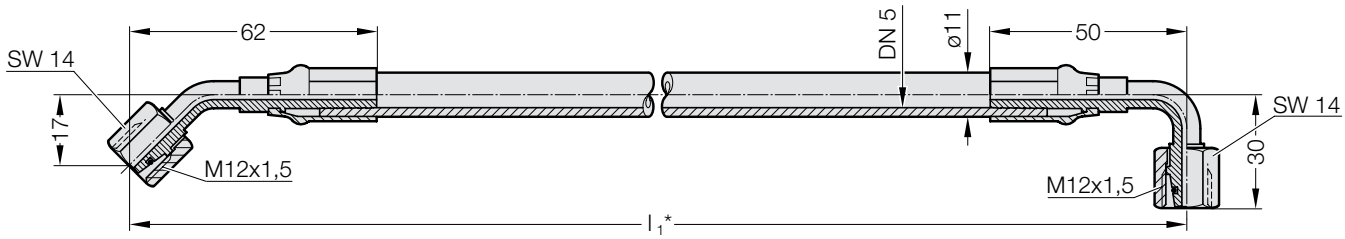


Dimension $l_1$ specified in the order, e.g. 765 mm gives order no. 2480.00.25.06.0765

**Order example:**
Shortest factory length: 140 mm
Minimum bending radius: R40

*24°-cone connection hoses available in the following lengths:
5 mm step range = 1000 mm
10 mm step range > 1000 mm
100 mm step range > 4000 mm
500 mm step range > 6000 mm

**2480.00.25.12.01**
Hose clamp for gauging hose
DN5 (∅11 mm)

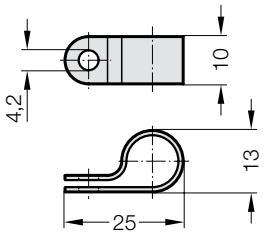


**Material:** Polyamide
**Note:**
Supplied without screws

**2192.50.04.012**
Self-tapping screw
A M4x12 DIN 7516

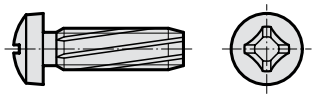

**Note:**
self-tapping,
Diameter of hole for self-tapping screw = 3.6 mm

**2480.00.23.13.**
Anti-scuff spiral
for subsequent installation over hoses and tubing

| Order No. | l in mm |
|---|---|
| 2480.00.23.13.0001 | 1000 |
| 2480.00.23.13.0002 | 2000 |
| 2480.00.23.13.0005 | 5000 |
| 2480.00.23.13.0010 | 10000 |

| | |
|---|---|
| Inner ø | 7 mm max. |
| For hose external ø | 5-11 mm |
| Temperature range | -30°C up to +100°C |

**Material:**
Polyamide
**Description:**
The anti-scuff spiral is used to protect against abrasion, is resistant to air, water, oil, hydraulic fluids petrol and other liquids.

# GAS SPRING ACCESSORIES
# CONNECTOR SYSTEM, 24° CONUS MICRO

**2480.00.27.11**

Pipe for 24° conus micro
Delivered length: 1 m

Min. bending radius R12 mm (3 x external diameter)

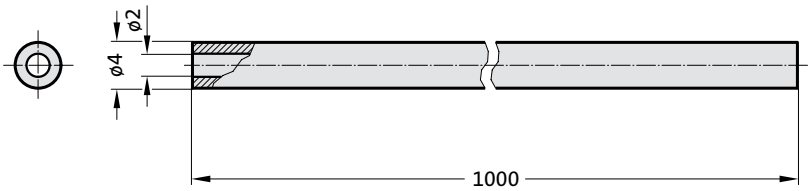


**2480.00.27.11.01**

Cutting ring screw connection, 24° cone micro

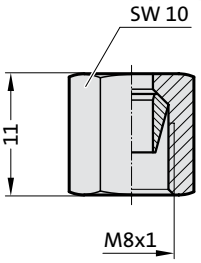


**2480.00.27.00.01**

Deburring tool for 24° conus micro

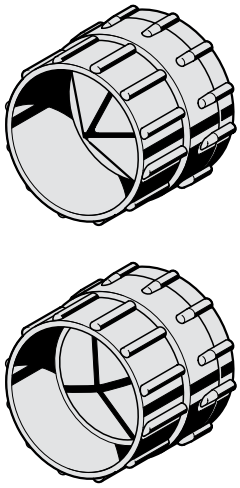

**2480.00.27.00.02**

Pipe cutter for 24° conus micro

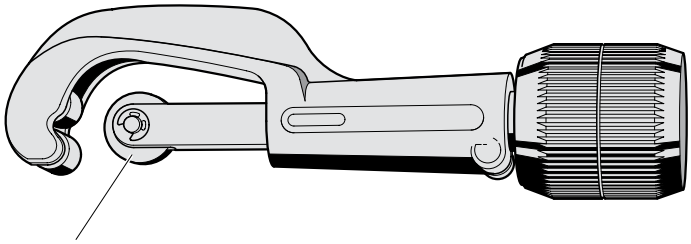

**2480.00.27.00.02.1**

Replacement cutting wheel for pipe cutter

# GAS SPRING ACCESSORIES
# CONNECTOR SYSTEM, 24° CONUS MICRO

### 2480.00.28.01

Screw connection
GE–M6–24° cone micro

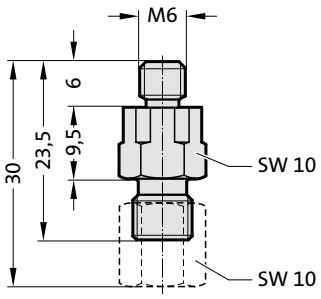


### 2480.00.28.02

Screw connection
GE–G1/8–24° cone micro

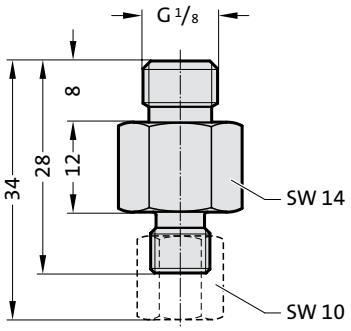


### 2480.00.28.03

Screw connection
GE–G1/4–24° cone micro

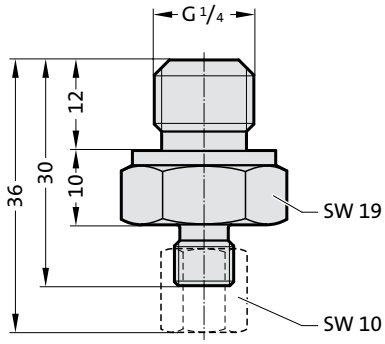


### 2480.00.28.14

Screw connection, T–24° conus micro

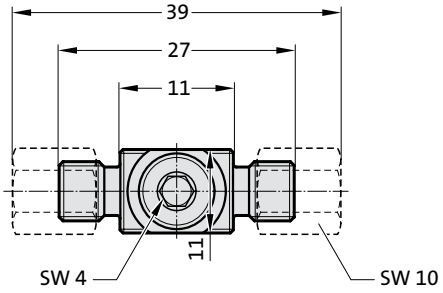


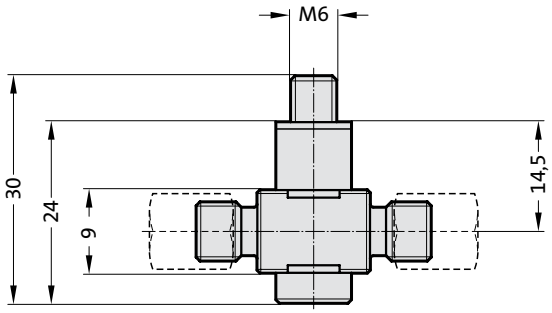


### 2480.00.28.17

Screw connection, W–24° conus micro

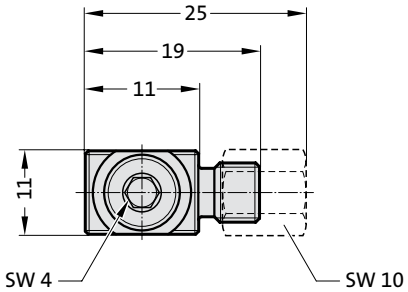


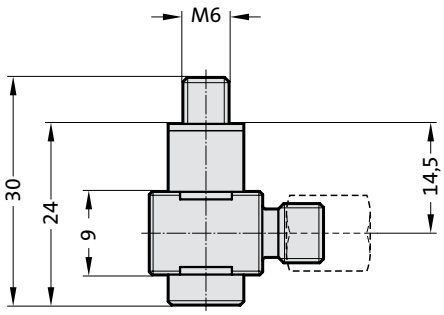

# GAS SPRING ACCESSORIES
# CONNECTOR SYSTEM, MICRO

## 2480.00.22.06.06

Screw connection, GE–M6–M6 micro for connection to gas spring with divided wheel flange 2480.022.

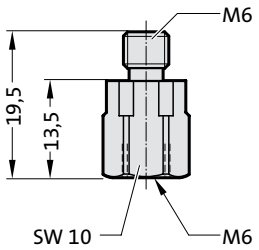


## 2480.00.22.18.06

Screw connection, GE–G1/8–M6 micro
for 2480.00.28.14 / 2480.00.28.17

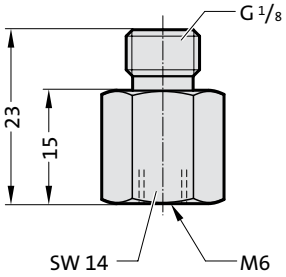


## 2480.00.22.14.06

Screw connection, GE–G1/4–M6 micro
for 2480.00.28.14 / 2480.00.28.17

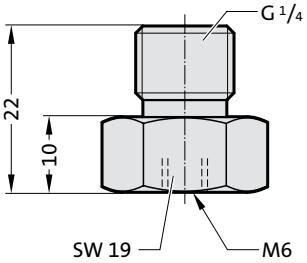


## 2480.00.28.15

Screw connection,
L–24° conus micro

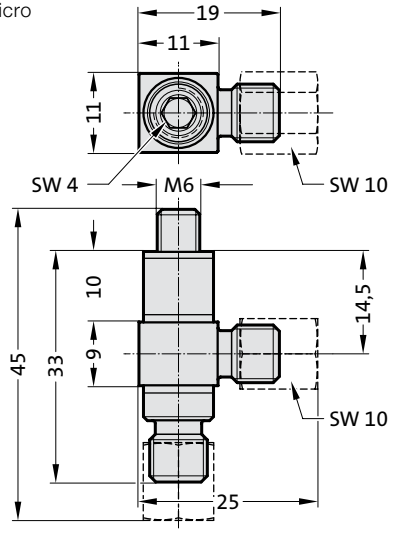


## 2480.00.28.16

Screw connection,
K–24° conus micro

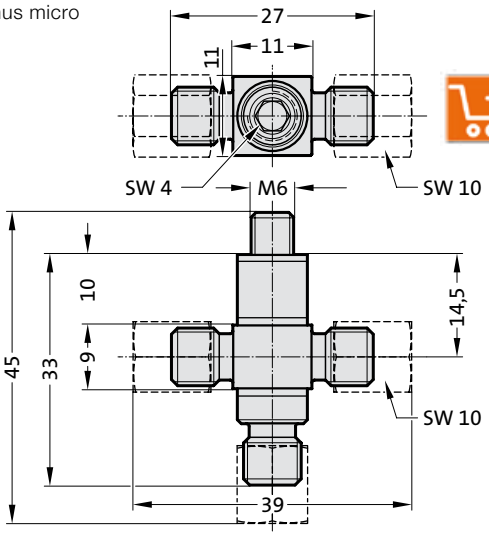

# GAS SPRING ACCESSORIES
# CONNECTOR SYSTEM 24° CONE MICRO

## 2480.00.28.25
Adapter, GE–24° cone micro
hose – hose

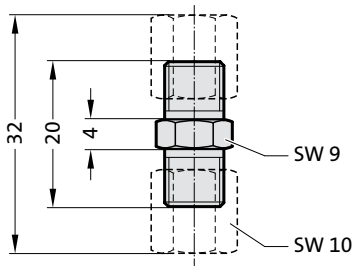


## 2480.00.28.26
Adapter, W–24° cone micro
hose – hose

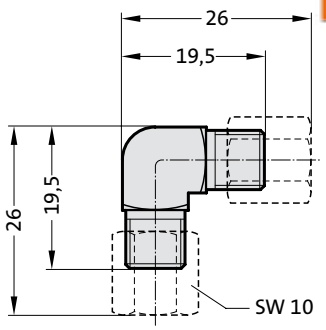


## 2480.00.28.27
Adapter, T–24° cone micro
hose – hose

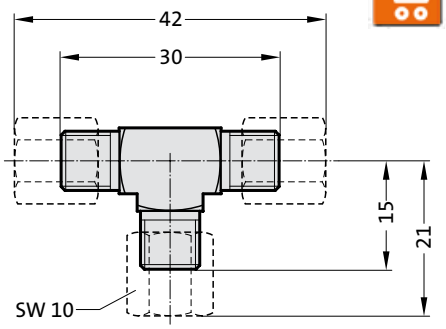


## 2480.00.28.28
Adapter, K–24° cone micro
hose – hose

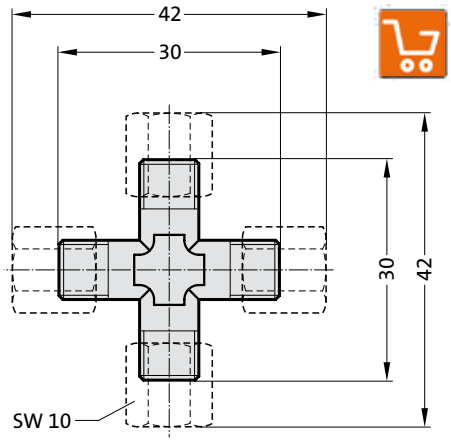


## 2480.00.28.34
Distributor block M6, 4 ports

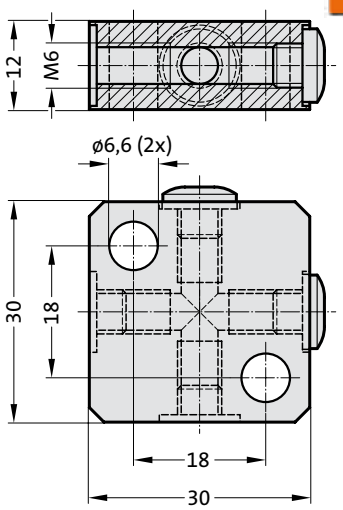

# CONTROL FITTING
# WITHOUT PRESSURE RELIEF
# WITH PRESSURE RELIEF

**Description:**
The micro control valve 2480.00.34.11.1/13.1 is used for continuous monitoring of the filling pressure of one or more gas springs (2 x 5 M6 connections, top, bottom and x 4 rear).

**Note:**
* 2 m long filling hose
Order no. 2480.00.31.02
order separately

**2480.00.34.11.1 without pressure relief**
**2480.00.34.13.1 with pressure relief**

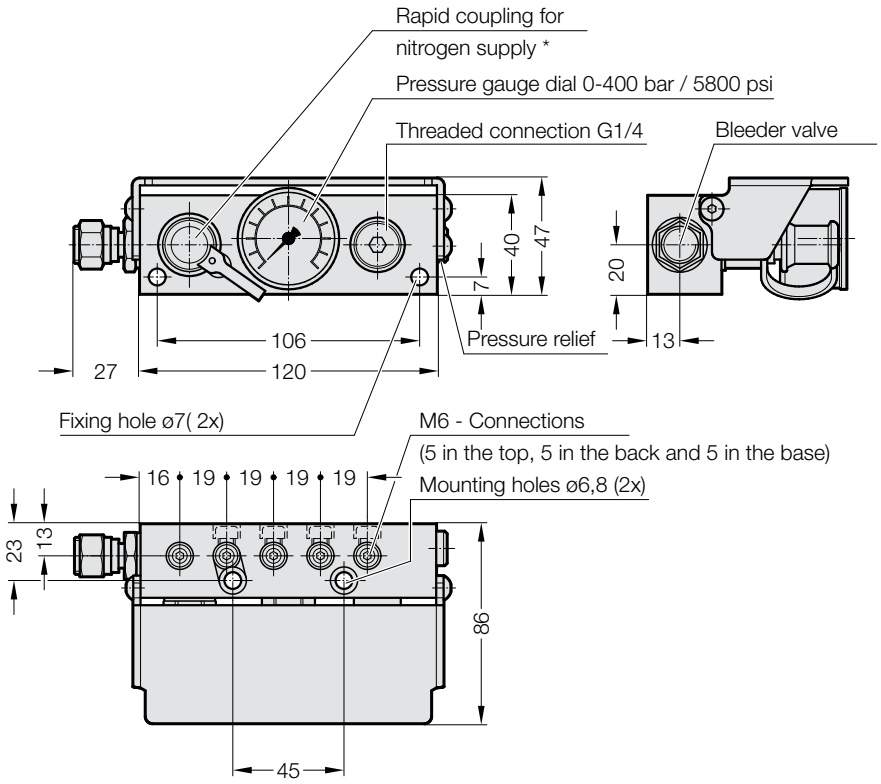

# CONTROL FITTING

**2480.00.30.01.1** **without pressure switch, without pressure relief**
**2480.00.30.02.1** **with pressure switch, without pressure relief**
**2480.00.30.03.1** **without pressure switch, with pressure relief**
**2480.00.30.04.1** **with pressure switch, with pressure relief**

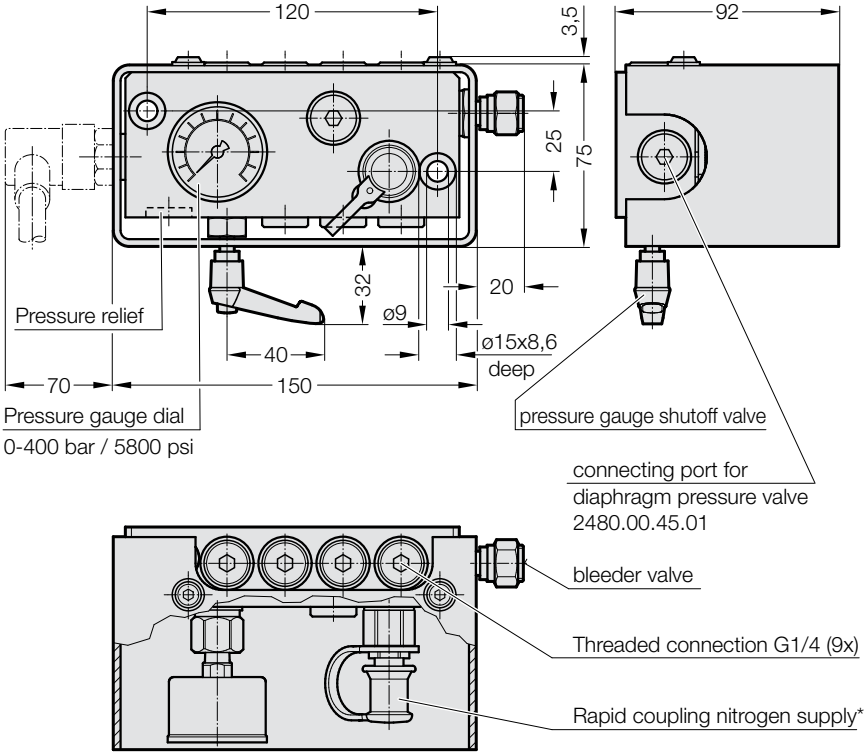


**Description:**
The control fitting
2480.00.30.01.1/02.1/03.1/04.1 serves to control the charge pressure of up to eight connected gas springs.
Pressure checks during operation can be effected in two ways:
a) via optical monitoring of the pressure gauge dial.
b) via automatic monitoring with a diaphragm pressure switch. The switch will shut down the machine or trigger a signal.

**Note:**
The shut-off valve can be either open or closed during operation.
Closing the pressure gauge shut-off valve ensures that no pressure pulsations from the gas springs act on the pressure gauge.
* 2 m long filling hose
Order no. 2480.00.31.02 to be ordered separately

---

**2480.00.31.01.1** **without pressure switch**
**2480.00.31.06.1** **with pressure switch**
**2480.00.31.07.1** **without pressure switch and with pressure relief**
**2480.00.31.08.1** **with pressure switch, with pressure relief**

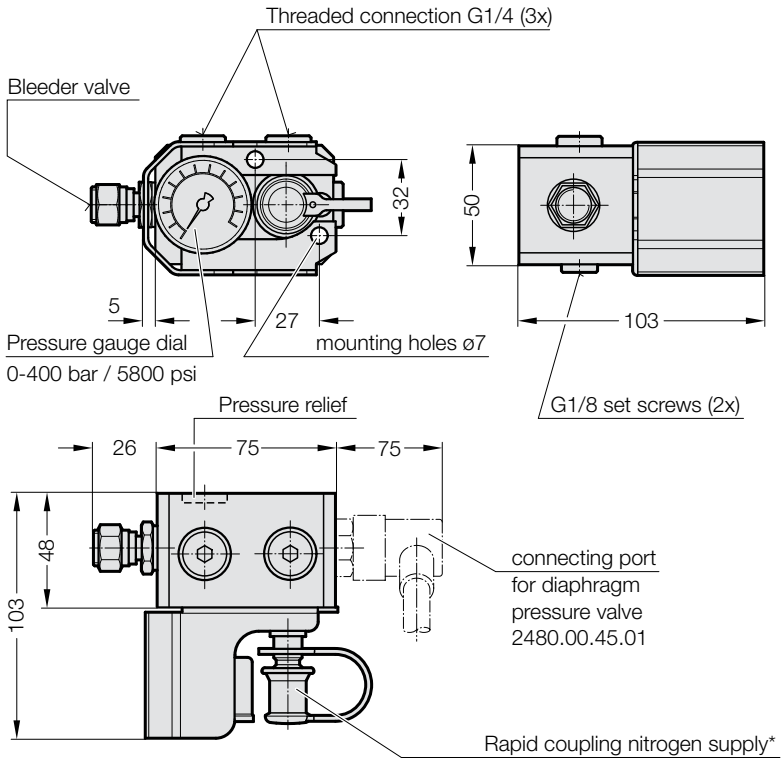


**Description:**
The control fitting 2480.00.31.01.1 performs the same function as the control armature 2480.00.30.01.1

**Note:**
* 2 m long filling hose
Order no. 2480.00.31.02
order separately

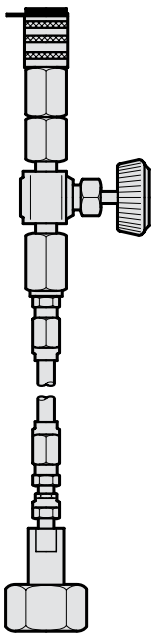

# CONTROL FITTING

**2480.00.30.13.1 without pressure switch, with pressure relief**

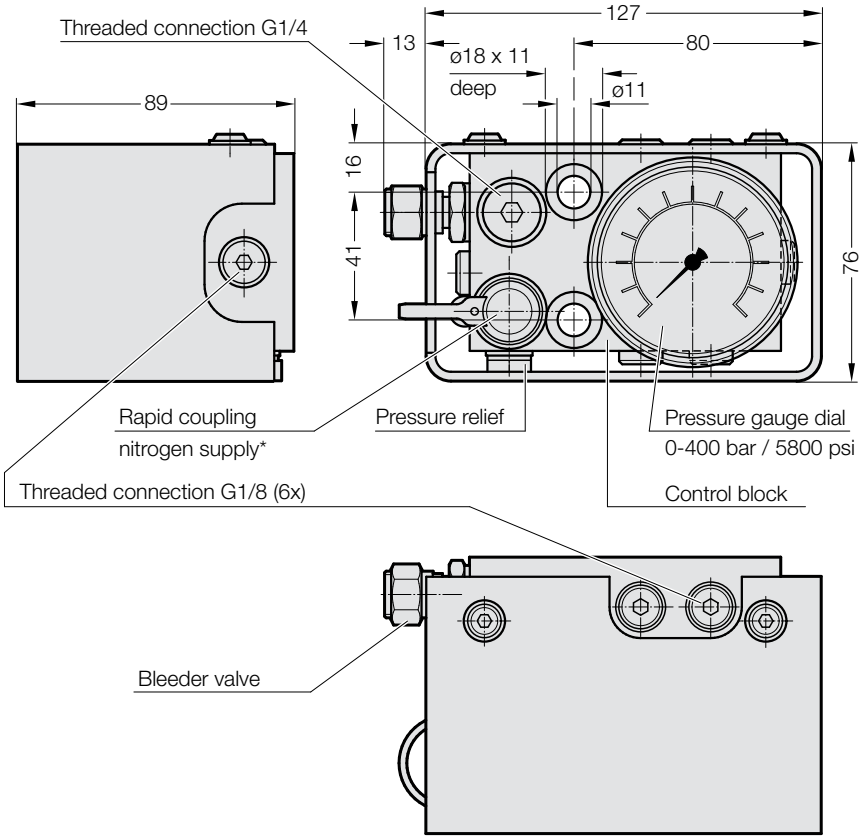

**Description:**
The control fitting 2480.00.30.13.1 is used to constantly monitor the filling pressure of one or more gas springs. The control fitting is equipped with rapid coupling for nitrogen supply and a bleeder valve. There are three G1/8 ports for simultaneous pressure checking at the control fitting. Measuring range from 0 - 400 bar / 5800 psi.

**Note:**
* 2 m long filling hose
Order no. 2480.00.31.02
order separately

**2480.00.30.14.1 (600 bar) without pressure switch, without pressure relief**

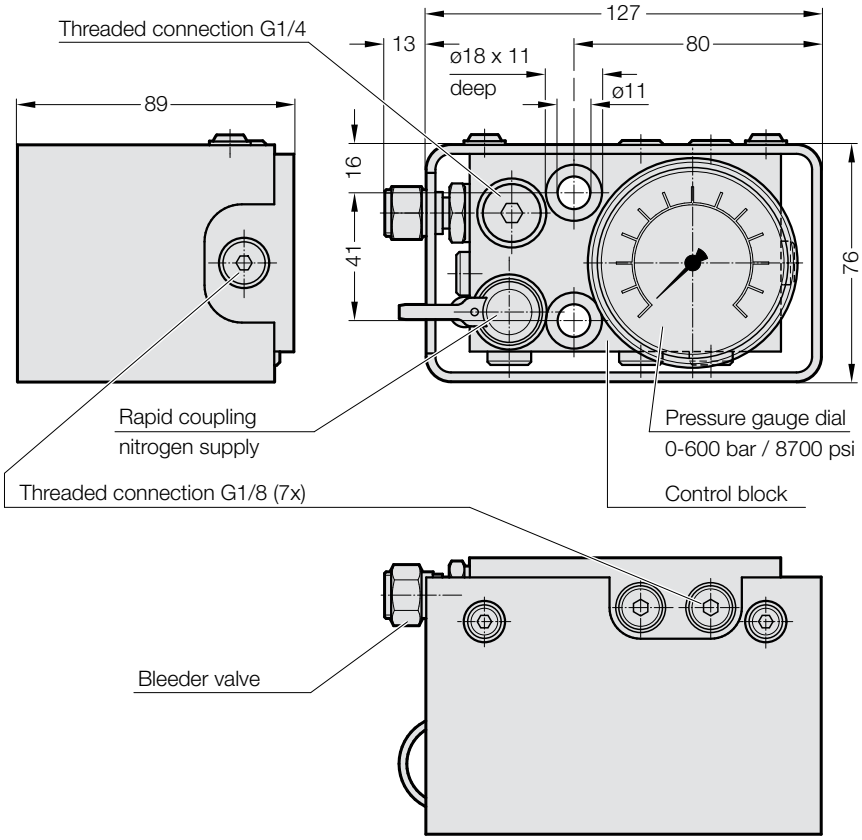

**Description:**
The control fitting 2480.00.30.14.1 is used for the constant monitoring of filling pressures > 150 bar of one or more gas springs. The control fitting is equipped with rapid coupling for nitrogen supply and a bleeder valve. There are three G1/8 ports for simultaneous pressure checking at the control fitting. Measuring range from 0-600 bar (8700 psi).

**Note:**
* 2 m long filling hose
Order no. 2480.00.31.02
order separately

# MULTIPLE CONTROL FITTING

## 2480.00.39.05. Multiple control fitting

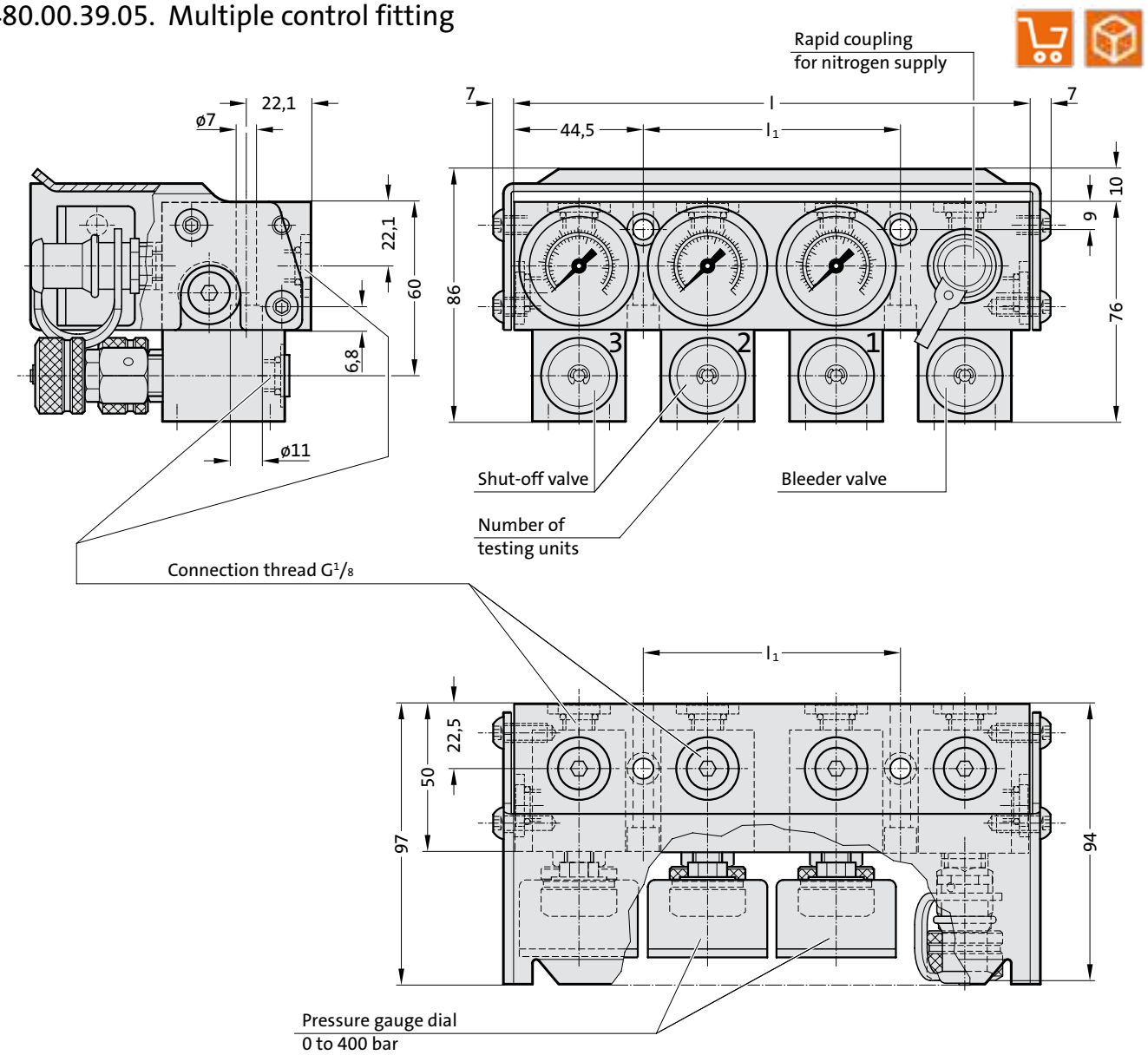


### Description:

The multiple control fitting is required if it is necessary to check or set the filling pressure of each spring or spring assembly individually.
The filling of the springs is done at a central position using the rapid coupling for nitrogen supply. Each testing unit is provided with three threaded connections for the optional hose connection.
The cover protects against mechanical damages.

### 2480.00.39.05. Multiple control fitting

| Order No | Number of testing units | l | $l_1$ |
|---|---|---|---|
| 2480.00.39.05.02 | 2 | 133.5 | 44.5 |
| 2480.00.39.05.03 | 3 | 178 | 89 |
| 2480.00.39.05.04 | 4 | 222.5 | 133.5 |
| 2480.00.39.05.05 | 5 | 267 | 178 |
| 2480.00.39.05.06 | 6 | 311.5 | 222.5 |
| 2480.00.39.05.08 | 8 | 400.5 | 311.5 |
| 2480.00.39.05.10 | 10 | 489.5 | 400.5 |

# CONTROL FITTING

**2480.00.31.11.1**

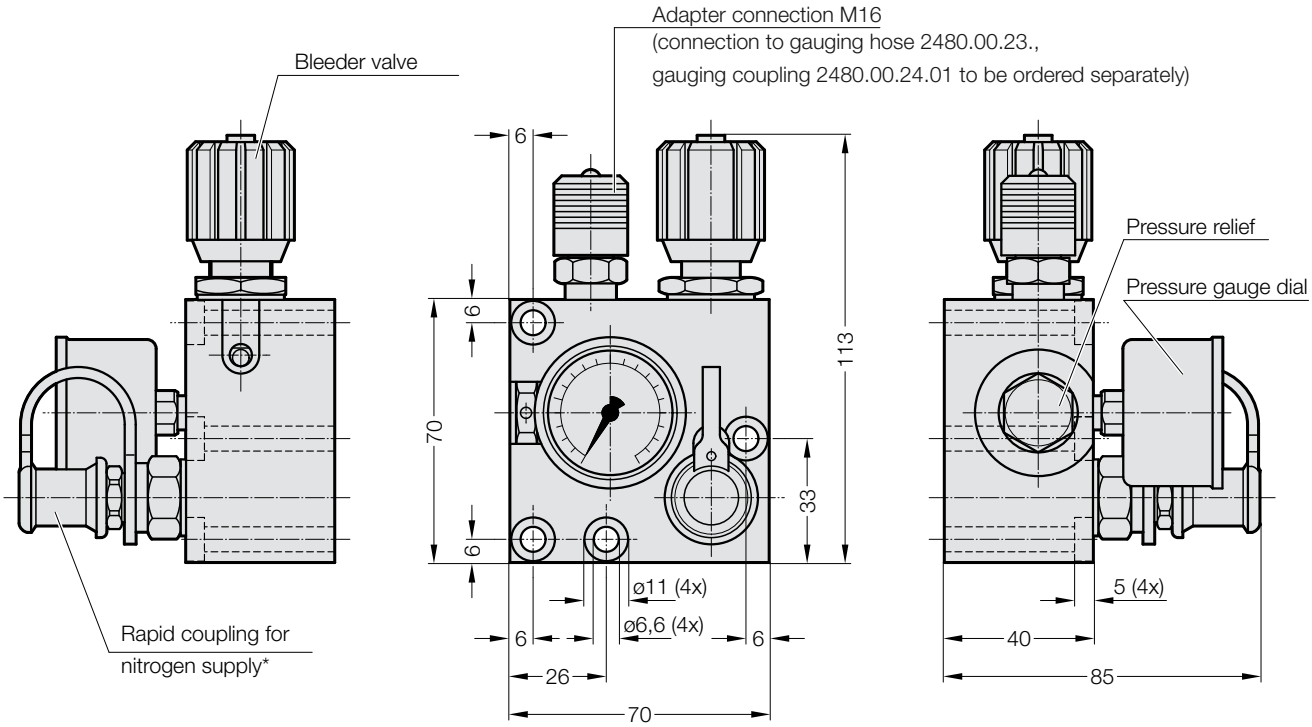


**Description:**

The control fitting with pressure relief 2480.00.31.11.1 (Faure) is used for the continuous monitoring of the filling pressure of one or more gas pressure springs (one connection G1/8–M16). The pressure check during operation can be carried out by optical monitoring of the manometer display.

**Note:**

To connect measuring hose system 2480.00.23., remove M16 connection adapter and screw in the measuring coupling with valve 2480.00.24.01 (to be ordered separately).

With a composite arrangement of the gas springs, always remove the valve from the gas spring.

* 2 m long filling hose

Order no. 2480.00.31.02 to be ordered separately

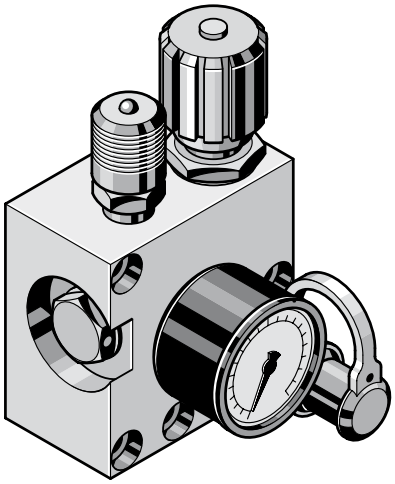

# DIAPHRAGM PRESSURE SWITCH
# ADAPTER BLOCK
# SCREW CONNECTION GE-G1/4-G1/8

## Technical data

### Diaphragm pressure switch

| | |
|---|---|
| 2480.00.45.01 | |
| Setting range | 20-250 bar |
| Tolerance | ±5.0 bar |
| Overpressure protection | 350 bar |
| max. voltage | 250 V |
| 2480.00.45.02 | |
| Setting range | 10-80 bar |
| Tolerance | ±1.6 bar |
| Overpressure protection | 350 bar |
| max. voltage | 250 V |

**Note:**

For individual monitoring of springs
see adapter 2480.00.45.10
Wiring diagram for diaphragm pressure switch

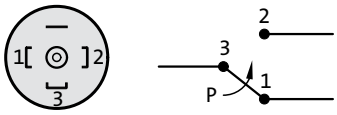


**2480.00.45.01**
**2480.00.45.02**

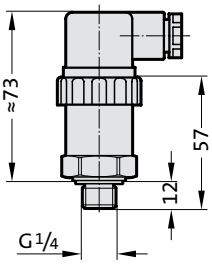

**2480.00.45.10**

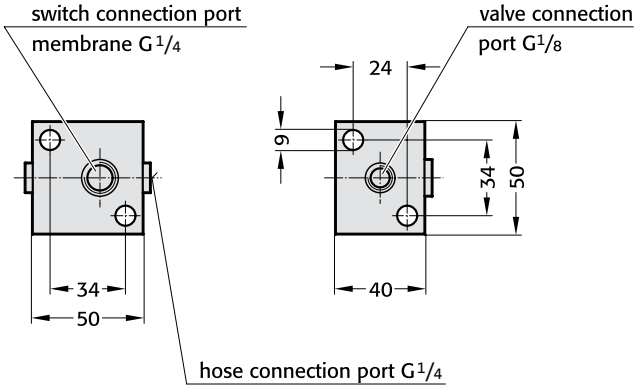


**2480.00.45.00.01.18.14**

Screw connection GE - G 1/8 - G 1/4 for control valve with screw connection G 1/8

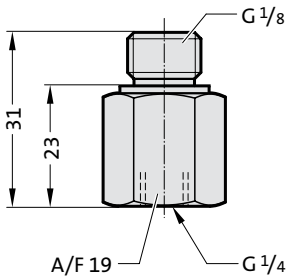


## Mounting example:

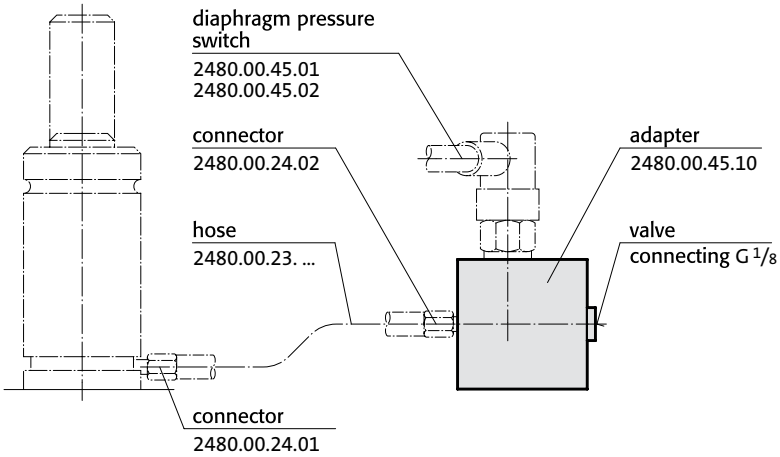


## Description:

The adapter 2480.00.45.10, in combination with the diaphragm pressure switch 2480.00.45.01 or 2480.00.45.02, permits filling pressure monitoring similar to the control fittings 2480.00.30.02.
When the filling pressure falls below a certain level, the diaphgram pressure
switch issues a signal or switches the machine off.

# DIAPHRAGM PRESSURE SWITCH, DIGITAL

## 2480.00.45.05

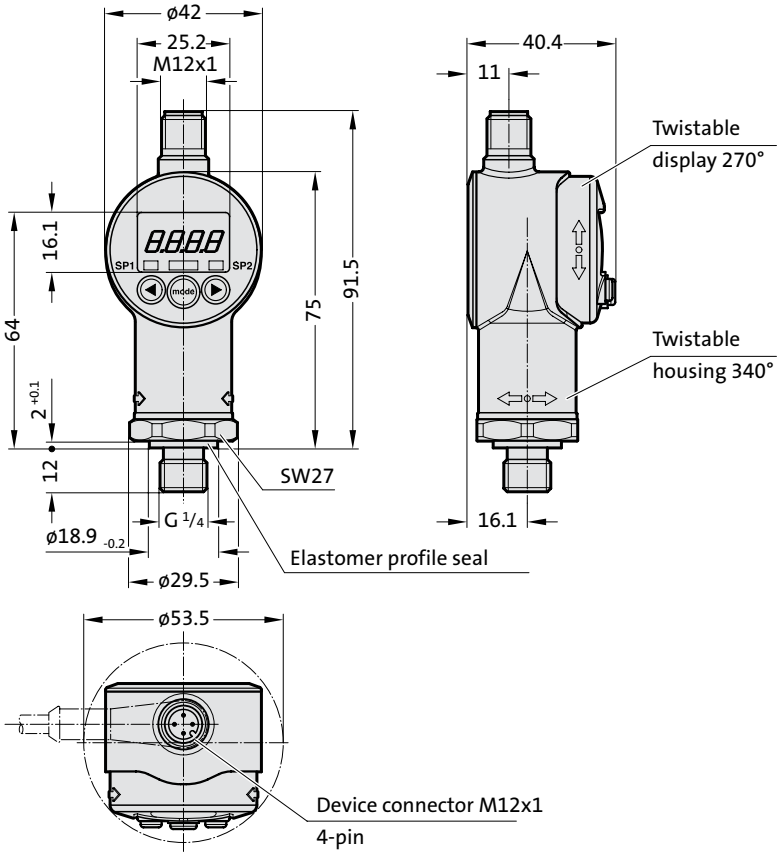


## Pin assignment:

M12x1, 4-pin

| Pin | |
|---|---|
| 1 | +UB |
| 2 | Analogue |
| 3 | 0 V |
| 4 | SP1 |

### Note:

2191.00.12.04.030 connecting cable, straight
3 m long, to be ordered separately.

### Description:

The diaphragm pressure switch, digital 2480.00.45.05 is a compact, electronic pressure switch with integrated digital display for relative pressure measurement in the high pressure range.
For this purpose, it has a stainless steel measuring cell with thin film strain gauge (DMS).
The device offers a switching output and a switchable analogue output signal (4 ... 20 mA resp. 0 ... 10 V).

**Advantages:**

- 1 PNP transistor output, loadable up to 1.2 A
- Precision ≤ ± 1 % FS
- Switchable analogue output (4 ... 20 mA / 0 ... 10 V)
- 4-digit digital display
- Optimal alignment by twisting in two axes
- Switching direction of the switch outputs adjustable (opening or closing function)
- Value display in bar, psi or MPa or freely scalable, for example, force
- Easy handling via button programming
- Switching points and reset hysteresis independently adjustable

### Technical data:

Input characteristics:

| | |
|---|---|
| Measuring range | 400 bar |
| Overload range | 800 bar |
| Burst pressure | 2000 bar |
| Mechanical connection | G1/4 |
| Tightening torque | 20 Nm |
| Media-contacting parts | Connection piece: Stainless steel<br>seal: FPM (G1/4 A DIN 3852) |

Output parameters:

| | |
|---|---|
| Precision according to DIN 16086, | ≤ ± 0.5 % FS typical |
| Limit point adjustment (display, analogue output) | ≤ ± 1 % FS max. |
| Reproducibility | ≤ ± 0.25% FS max. |
| Temperature drift | ≤ ± 0.025 % FS / °C max. Zero point<br>≤ ± 0.025 % FS / °C max. range |

Analogue output:

| | |
|---|---|
| Signal selectable: | 4 ... 20 mA load max. 500 Ω<br>0 ... 10 V load min. 1 kΩ |

Switching outputs:

| | |
|---|---|
| Version | PNP transistor switching output |
| Switching current | max. 1.2 A |
| Operating temperature range | 0° - 80 °C |
| CE mark | EN 61000-6-1 / 2 / 3 / 4 |
| Protection class according to DIN 40050 | IP67 |

Setting ranges for the switching outputs:

Switching function

| Measuring range in bar | Switching point in bar | Hysteresis in bar | Increment* in bar |
|---|---|---|---|
| 0 ... 400 | 6.0 ... 400 | 2.0 ... 396 | 1 |

Window function

| Measuring range in bar | Lower Switching value in bar | Upper Switching value in bar | Increment* in bar |
|---|---|---|---|
| 0 ... 400 | 6.0 ... 392 | 9.0 ... 396 | 1 |

* All areas specified in the table are adjustable in the grid of the step width.

WIRELESS PRESSURE MONITORING (WPM)

# WIRELESS MONITORING OF GAS SPRINGS

MOVIE MOVIE

PLEASE REQUEST YOUR CATALOGUE

PDF

www

# FILLING AND CONTROL FITTING
# FILLING HOSE
# CYLINDER PRESSURE REGULATOR

**Description:**
The filling and control fitting 2480.00.32.21 is used to fill, vary the pressure setting (e.g. when testing tools) and measure the gas pressure. The coupling enables the filling hose 2480.00.31.02 to be connected directly to the gas cylinder valve or the pressure regulator. If the fitting is used solely for checking purposes, a simplified arrangement without the filling hose 2480.00.31.02 is also possible. The fitting is equipped with an additional adapter 2480.00.32.10/.11 for connecting to gas springs with G 1/8 valve connection as standard.

**Note:**
2 m long filling hose with quick release coupling, shut-off valve and gas bottle connector, order no. 2480.00.31.02 (order separately). Other filling hose lengths to order.

## 2480.00.32.21 Filling and control fitting

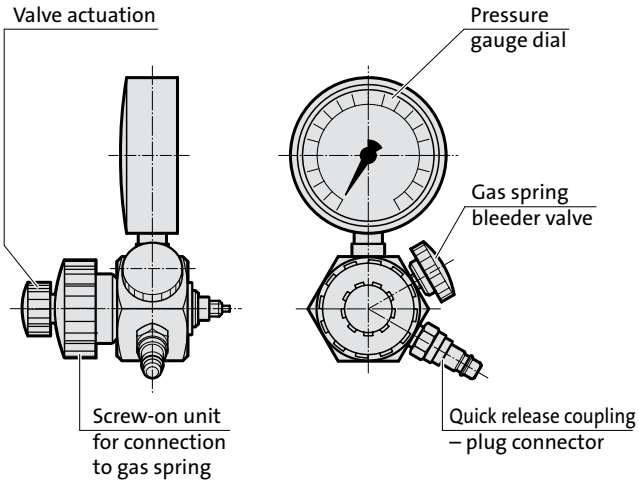


**Connecting adapter for cylinder connector**

| Order No. | Country | For cylinder connector |
|---|---|---|
| 2480.00.31.02.00.10 | France | AFNOR C, W21,8x1/14 |
| 2480.00.31.02.00.11 | China | G 5/8-ISO228 |
| 2480.00.31.02.00.12 | Great Britain | G 5/8 |
| 2480.00.31.02.00.13 | Korea | W24,32x1/4 Type 40f |
| 2480.00.31.02.00.14 | Russia | W24,32xG3/4 Type 40n |
| 2480.00.31.02.00.15 | USA | W24,32x1/4 Type 40c |
| 2480.00.31.02.00.16 | Italy | W24,32xW21,7x1/4 Type 40d |

## 2480.00.31.02 Filling hose

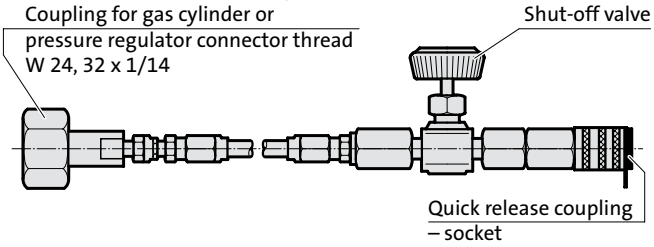


**Description:**

The pressure regulator 2480.00.32.07. is designed for 200 bar connections and for 300 bar gas cylinders.
The filling and control fitting 2480.00.32.21 is connected to the cylinder pressure regulator for filling gas springs using filling hose 2480.00.31.02 and connector adaptor 2480.00.32.07.04.
Depending on the type of gas cylinder, the gas cylinder connector used can either be the 2480.00.32.07.02 for 200 bar cylinders or the 2480.00.32.07.03 for 300 bar cylinders.

Max. admission pressure 300 bar
Back pressure range 10-200 bar

Other advantages:
- Hasty opening of the gate valve on the filling and control fitting 2480.00.32.21 cannot result in overfilling.
- It is not necessary to have the pressure display of the filling and control fitting 2480.00.32.21 in view.

## 2480.00.32.07. Gas cylinder pressure regulator

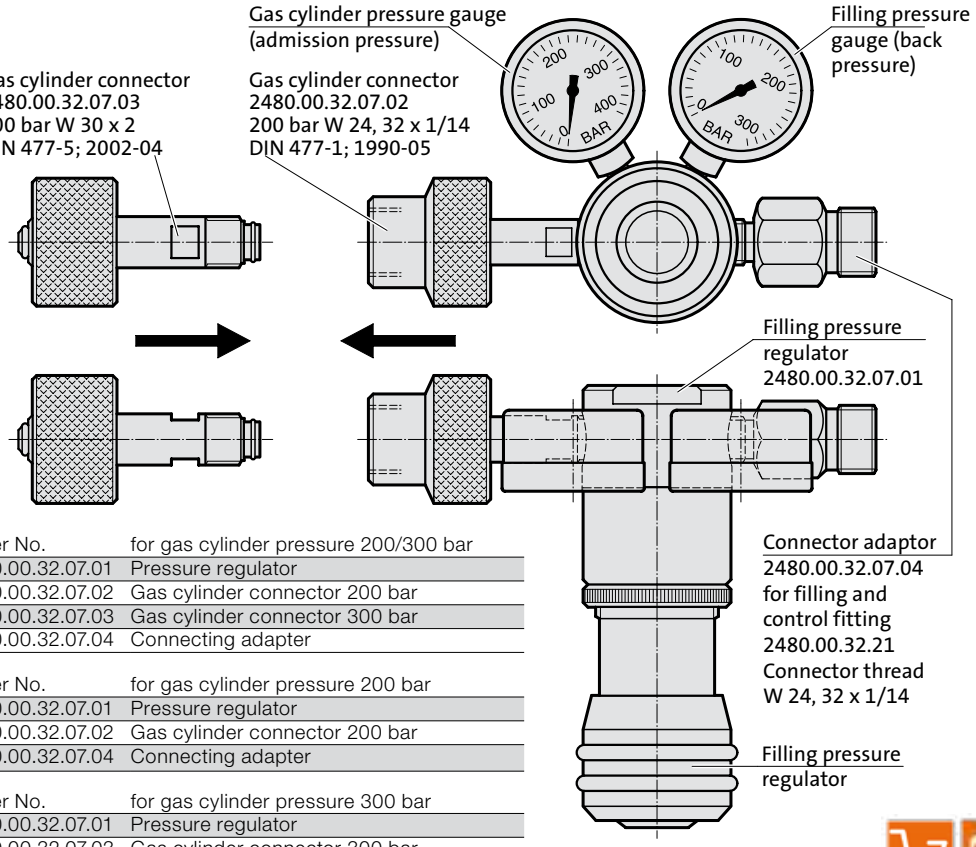


| Order No. | for gas cylinder pressure 200/300 bar |
|---|---|
| 2480.00.32.07.01 | Pressure regulator |
| 2480.00.32.07.02 | Gas cylinder connector 200 bar |
| 2480.00.32.07.03 | Gas cylinder connector 300 bar |
| 2480.00.32.07.04 | Connecting adapter |

| Order No. | for gas cylinder pressure 200 bar |
|---|---|
| 2480.00.32.07.01 | Pressure regulator |
| 2480.00.32.07.02 | Gas cylinder connector 200 bar |
| 2480.00.32.07.04 | Connecting adapter |

| Order No. | for gas cylinder pressure 300 bar |
|---|---|
| 2480.00.32.07.01 | Pressure regulator |
| 2480.00.32.07.03 | Gas cylinder connector 300 bar |
| 2480.00.32.07.04 | Connecting adapter |

# COMPACT NITROGEN BOOSTER

**2480.00.32.71**

Compact Nitrogen Booster

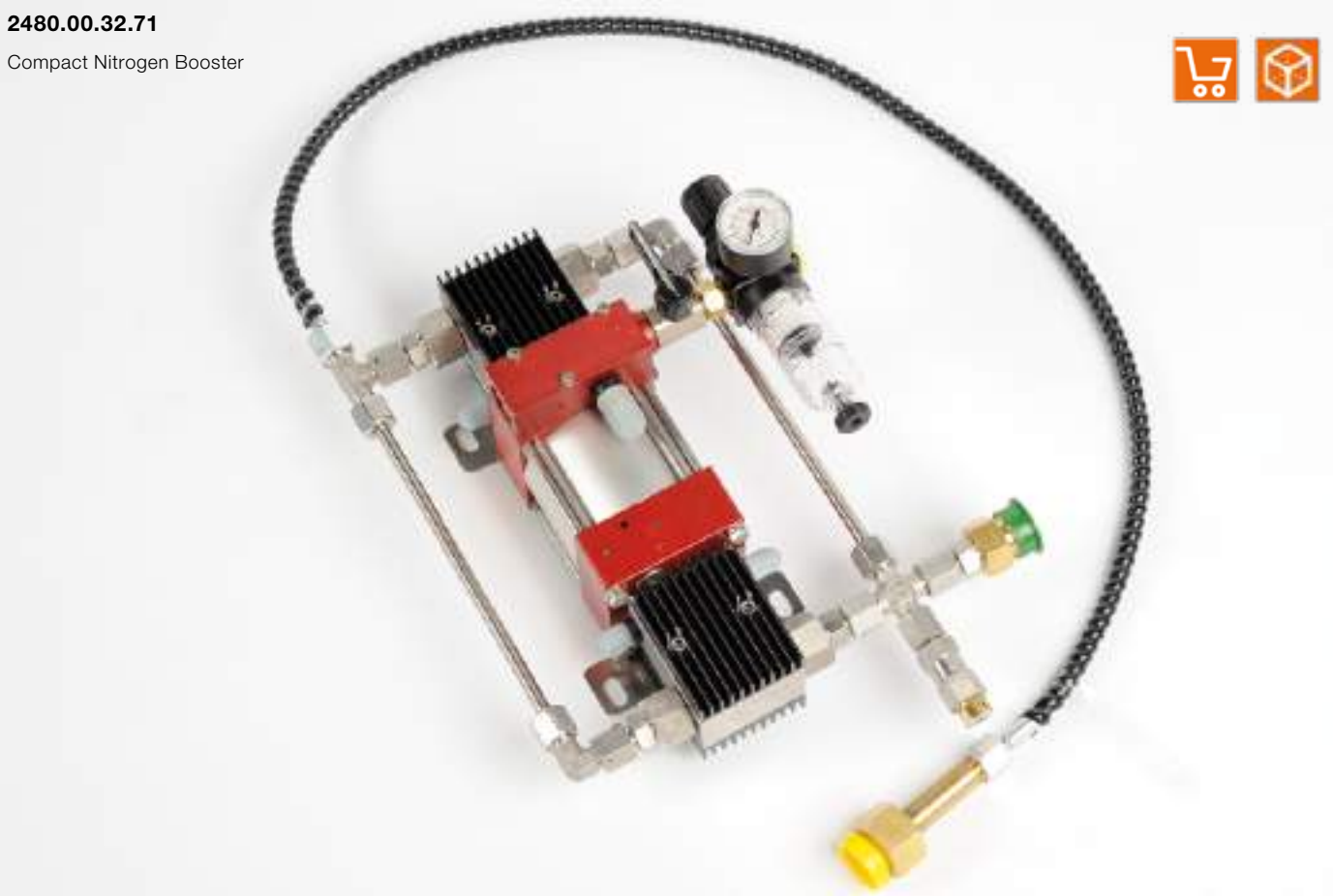

## 2480.00.32.71

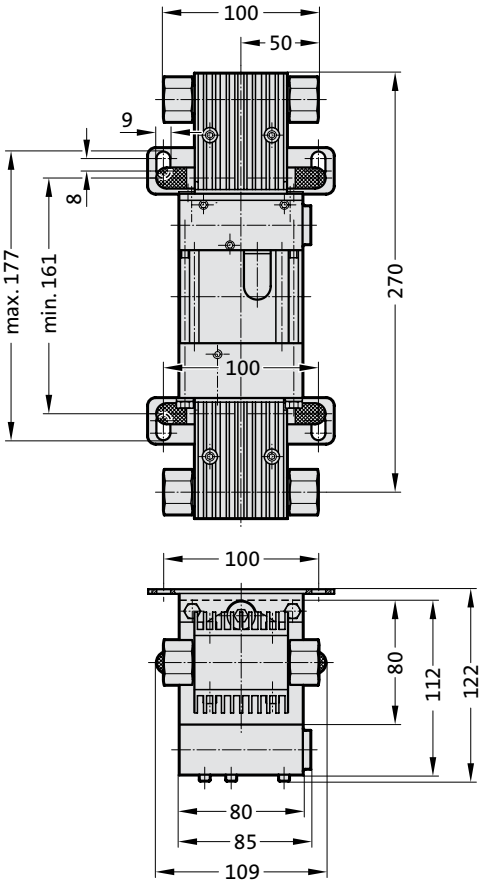


### Description:

The FIBRO compact nitrogen booster 2480.00.32.71 was developed to compress nitrogen gas. It increases the output pressure of the nitrogen cylinders considerably. For example, when filling gas springs, the $N_2$ cylinders can be used up to a residual pressure of 30 bar.

### Advantages:

- Increase in utilisation capacity
- Reduction in cylinder replacement time
- Minimisation of the number of cylinders
- Light weight (7.2 kg)
- Compact design
- Suitable for simple installation directly on all standard nitrogen cylinders (200 bar)

### Function:

The FIBRO compact nitrogen booster works according to the principle of a pressure relay valve. Low pressure is applied to a large surface, which in turns applies high pressure to a small surface.
Continuous delivery is achieved by means of an internally actuated 4/2-way valve. Compressed air is used as the drive mechanism.
A holding plate is included to secure the compact nitrogen booster to the nitrogen cylinder. The compact nitrogen booster is simply hung over the nitrogen cylinder connection.

# COMPACT NITROGEN BOOSTER HOLDING PLATE

### Connection diagram

Compact Nitrogen Booster

### 2480.00.32.71.02 Holding plate

for re-order

① 2480.00.32.71 Compact Nitrogen Booster
② Gas cylinder connection W24, 32 x $^1/_{14}$ for 200 bar nitrogen cylinder
③ Nitrogen $N_2$ inlet
④ Compressed air inlet G$^1/_4$ max. 10 bar
⑤ Overpressure protection 400 bar
⑥ Nitrogen $N_2$ outlet
⑦ Connecting thread W24, 32 x $^1/_{14}$

### Technical data:

Drive compressed air: 1 – 6 bar
Calculated operating pressure at 6 bar air drive pressure: 192 bar + remaining pressure in the nitrogen cylinder
Transmission ratio: 1:32
Displaced volume/double stroke: 11.6 cm³

### Connections:

Compressed air: G$^1/_4$" thread
Nitrogen inlet: Hose DN4, 1 m long with $N_2$ cylinder connection 200 bar
Nitrogen outlet: $N_2$ cylinder connection 200 bar W24, 32 x $^1/_{14}$
Max. operating temperature: 60 °C
Weight: approx. 7.2 kg
Inlet pressure: 30-300 bar
Average supply rate*: 280 NL/min

* The delivery rate is dependent on the air drive and inlet pressure.

## 2480.00.32.71.02

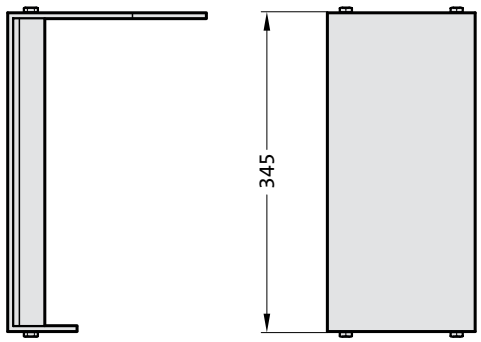


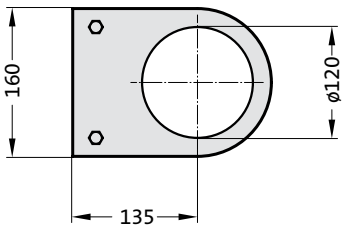

# DYNAMOMETER FOR GAS SPRINGS

**Description:**

The dynamometer with mechanical measuring device can be used to test the spring force of gas springs up to 8000 daN.

The dynamometer with digital measuring device can be used to test the spring force of gas springs up to 10000 daN.

The dynamometer 2480.00.35.021 with analogue display is supplied with three interchangeable pressure measuring nozzles different ranges of values:
up to 300 daN,
from 300 to 1750 daN
and from 1750 bto 8000 daN

The dynamometer 2480.00.35.032 with digital display has a pressure measuring nozzle for forces ranging from 0 to 10000 daN.

Maximum spring installation height:
analogous = 700 mm
digital = 760 mm

# DYNAMOMETER FOR GAS SPRINGS

**Description:**
The dynamometer with digital measuring device can be used to test the spring force of gas springs up to 2000 daN. Max. spring installation height: 488 mm.
Max. spring diameter: 150 mm.

# TOOLKIT FOR ASSEMBLING GAS SPRINGS

## 2480.00.50.11

Toolkit for all gas springs
The toolkit contains:

| Item | Order No | Term | Type |
|---|---|---|---|
| 1 | 2480.00.50.01.001 | Assembly sleeve | Mini |
| 2 | 2480.00.50.01.002 | Assembly sleeve | 00250 |
| 3 | 2480.00.50.01.003 | Assembly sleeve | 00500 |
| 3-1 | 2480.00.50.01.031 | Assembly sleeve | X500 |
| | | (2487.12.00500.) | |
| 4 | 2480.00.50.01.004 | Assembly sleeve | 00750 |
| 5 | 2480.00.50.01.005 | Assembly sleeve | 01500 |
| 5-1 | 2480.00.50.01.051 | Assembly sleeve | X1500 |
| | | (2487.12.01500.) | |
| 6 | 2480.00.50.01.006 | Assembly sleeve | 03000 |
| 7 | 2480.00.50.01.007 | Assembly sleeve | 05000 |
| 8 | 2480.00.50.01.008 | Assembly sleeve | 07500 |
| 9 | 2480.00.50.01.009 | Assembly sleeve | 10000 |
| 10-1 | 2480.00.50.01.101 | Safety ring tool | |
| 13 | 2480.00.50.01.013 | T-lever | M8 |
| 14-1 | 2480.00.50.01.141 | T-lever | M16 |
| 15 | 2480.00.50.01.015 | T-lever | G 1/8” |
| 16-2 | 2480.00.50.01.162 | T-lever, Extension | M6 |
| Spare part for 16-1 | | | |
| 17 | 2480.00.50.01.017 | Valve tongs | |
| 18 | 2480.00.50.01.018 | Valve tool | M6 |
| 19 | 2480.00.50.01.019 | Valve tool | G 1/8“ |
| 30 | 2480.00.50.01.030 | Valve tool | VG 5 |
| 33 | 2480.00.50.01.033 | Valve tool | M6 |
| | | (2480.00.41.1) | |
| 34 | 2480.00.50.01.034 | Disassembly handle | M3 |
| 39-1 | 2480.00.50.01.391 | Tool case | |

### Description:

Toolkit for assembling and disassembling gas springs.

### Note:

Read instructions for use before working on it.

Every tool can be ordered separately.

# ASSEMBLING CONE

**2480.00.50.04.**

Assembling cone for gas springs with through bore passage 2496.12.

| Item | Order No | Term |
|---|---|---|
| 001 | 2480.00.50.04.001 | Assembling cone 00270 |
| 002 | 2480.00.50.04.002 | Assembling cone 00490 |
| 003 | 2480.00.50.04.003 | Assembling cone 01060 |
| 004 | 2480.00.50.04.004 | Assembling cone 01750 |
| 005 | 2480.00.50.04.005 | Assembling cone 03300 |
| 006 | 2480.00.50.04.006 | Assembling cone 04250 |

# PNEUMATIC HOSE CRIMPING MACHINE
# HOSE SHEARS

## 2480.00.54.10 Pneumatic hose crimping machine

Hose crimping machine, for pneumatic hose sizes DN2 and DN5

### Description:

The FIBRO pneumatic hose crimping machine, 2480.00.54.10 is suited for crimping the following hose connection systems:
- Minimess system 2480.00.23.
- 24°-cone-system 2480.00.25.
- Connector system, 24° conus micro 2480.00.27.01.

The pneumatic-hydraulic hose crimping machine drive enables simple and fast hose harnessing.
After connecting compressed air (max. 7 bar) on the G1/4“ threaded fitting, the hose crimping machine is operated manually with the air-hydraulic pump (0.1 - 0.5 l/min. at 7 bar air pressure).
**Lubrication-free**
Plain bearing on die:
- improved performance due to reduced friction
- no press tool wear and no contamination from lubricants, 20% reduction in friction loss

### Technical data:

| | |
|---|---|
| Crimp force [kN/t] | 750 / 75 |
| Crimp range | 52 |
| Opening | +10 |
| Opening without pressing jaws | 52 |
| Pressing jaws nominal hose width DN2 | 2480.00.54.10.02 |
| Pressing jaws nominal hose width DN5 | 2480.00.54.10.05 |
| Drive | Compressed air |
| Oil volume [l] | 1.4 |
| Dimensions (LxWxH) | 230x180x160 |
| Weight [kg] | 16 |

## 2480.00.54.03

Hose shears

The following crimping fixtures and hoses can be ordered:
**for the Minimess system**

| | |
|---|---|
| 2480.00.23.00. | Hose 630 bar dimpled, DN2 * |
| 2480.00.23.01.V | Threaded connection, straight, packed, DN2 - 1215 |
| 2480.00.23.01.V.025 | Threaded connection, straight, packed, DN2 - 1215/ 25 Stck |
| 2480.00.23.01.V.050 | Threaded connection, straight, packed, DN2 - 1215/ 50 Stck |
| 2480.00.23.01.V.100 | Threaded connection, straight, packed, DN2 - 1215/ 100 Stck |
| 2480.00.23.02.V | Threaded connection, 90°, packed, DN2 - 1215 |
| 2480.00.23.02.V.025 | Threaded connection, 90°, packed, DN2 - 1215/ 25 Stck |
| 2480.00.23.02.V.050 | Threaded connection, 90°, packed, DN2 - 1215/ 50 Stck |
| 2480.00.23.02.V.100 | Threaded connection, 90°, packed, DN2 - 1215/ 100 Stck |

**for the connector system, 24° cone micro**

| | |
|---|---|
| 2480.00.23.00. | Hose 630 bar dimpled, DN2 * |
| 2480.00.27.01.V | Threaded connection, straight, packed |
| 2480.00.27.01.V.025 | Threaded connection, straight, packed/ 25 Stck |
| 2480.00.27.01.V.050 | Threaded connection, straight, packed/ 50 Stck |
| 2480.00.27.01.V.100 | Threaded connection, straight, packed/ 100 Stck |

**for the 24° cone system ****

| | |
|---|---|
| 2489.00.02. | High-pressure hose, dimpled, DN5 * |
| 2480.00.25.01 | Hose fitting, straight |
| 2480.00.25.02 | Hose fitting, 90° |
| 2480.00.25.04 | Hose fitting, 45° |

*** Hoses to be ordered in 1 m lengths, e.g.:**
**example order for hose DN2, 10 m long = 2480.00.23.00.0010**

** not for 2480.00.54.20 manual hose press, electric

# HAND HELD HOSE CRIMPING MACHINE, ELECTRIC (BATTERY POWERED) HOSE SHEARS

## 2480.00.54.20 Hand held hose crimping machine, electric (battery powered)

Electric hand held hose crimping machine (battery operated)

for hose size DN2

### Description:

The FIBRO electric hand held hose crimping machine, 2480.00.54.20 is suited for crimping the following hose connection systems:
- Minimess system 2480.00.23.
- Connector system, 24° conus micro 2480.00.27.01

The electric/hydraulic (battery-operated) drive of the manual hose press permits quick and easy hose manufacture directly on the die. The correct crimp force is ensured by a crimp force sensor and once correct force is reached an audible signal can be heard. The electric hand held hose crimping machine, is ideal for very quick crimping.

Included: Electric hand held hose crimping machine, crimping jaws, battery, charger and case.

### Technical data:

| | |
|---|---|
| Crimp force [kN/t] | 15 / 1,5 |
| Quantity of pressings | approx. 150 at 1,5 Ah |
| Head for crimping jaws | approx. 350° rotatable |
| Drive | battery powered |
| Voltage [V] | 18 |
| Performance [Ah] | 1.5 |
| Battery charging time [min.] | 15 |
| Dimensions (LxWxH) | 377x75x116 |
| Weight [kg] | 2.3 |

The following crimping fixtures and hoses can be ordered:
**for the Minimess system**

| | |
|---|---|
| 2480.00.23.00. | Hose 630 bar dimpled, DN2 * |
| 2480.00.23.01.V | Threaded connection, straight, packed, DN2 - 1215 |
| 2480.00.23.01.V.025 | Threaded connection, straight, packed, DN2 - 1215/ 25 Stck |
| 2480.00.23.01.V.050 | Threaded connection, straight, packed, DN2 - 1215/ 50 Stck |
| 2480.00.23.01.V.100 | Threaded connection, straight, packed, DN2 - 1215/ 100 Stck |
| 2480.00.23.02.V | Threaded connection, 90°, packed, DN2 - 1215 |
| 2480.00.23.02.V.025 | Threaded connection, 90°, packed, DN2 - 1215/ 25 Stck |
| 2480.00.23.02.V.050 | Threaded connection, 90°, packed, DN2 - 1215/ 50 Stck |
| 2480.00.23.02.V.100 | Threaded connection, 90°, packed, DN2 - 1215/ 100 Stck |

**for the connector system, 24° cone micro**

| | |
|---|---|
| 2480.00.23.00. | Hose 630 bar dimpled, DN2 * |
| 2480.00.27.01.V | Threaded connection, straight, packed |
| 2480.00.27.01.V.025 | Threaded connection, straight, packed/ 25 Stck |
| 2480.00.27.01.V.050 | Threaded connection, straight, packed/ 50 Stck |
| 2480.00.27.01.V.100 | Threaded connection, straight, packed/ 100 Stck |

*** Hoses to be ordered in 1 m lengths, e.g.:**
**example order for hose DN2, 10 m long = 2480.00.23.00.0010**

## 2480.00.54.03

Hose shears

# SERVICE STATION, MOBILE, FOR GAS SPRINGS

2480.00.50.20.

Service station, mobile, for gas springs

**2480.00.50.20.2**

Lighting unit, removable

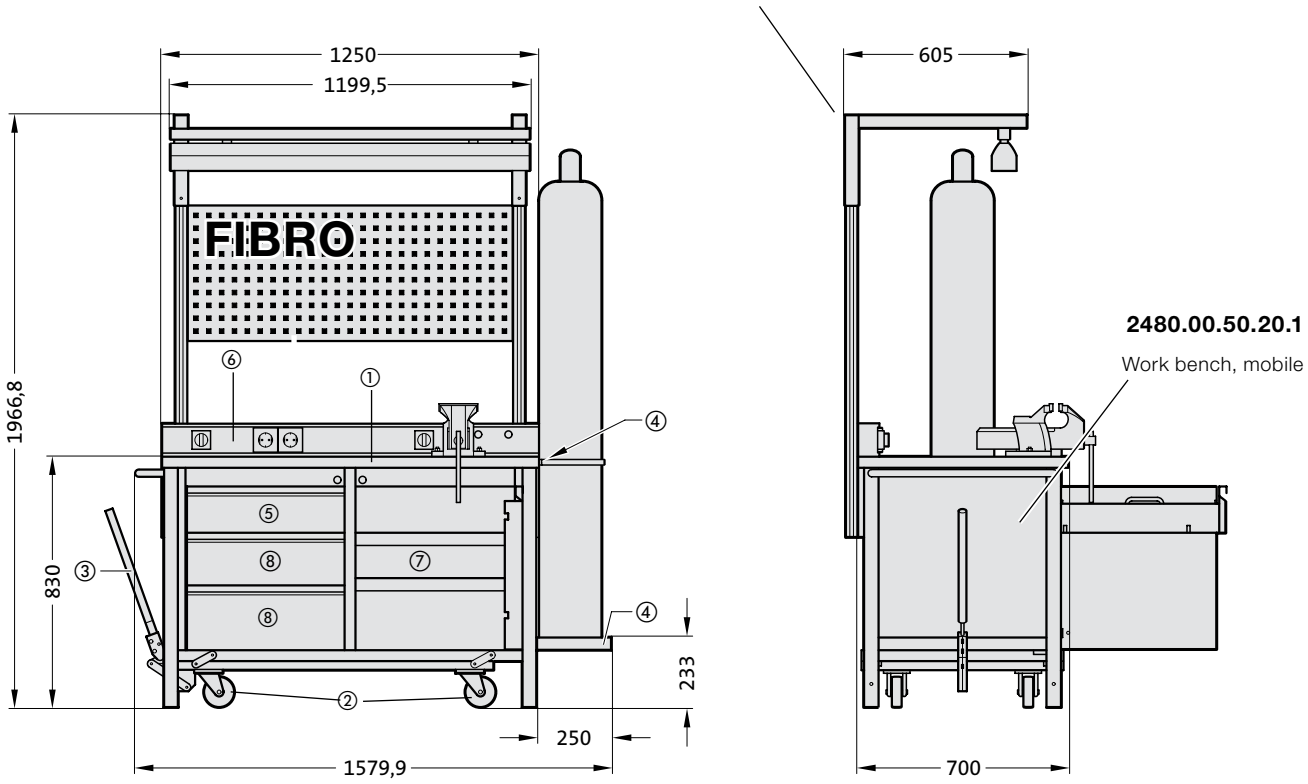


## Description:

The mobile service station for gas springs represents an optimum solution if gas springs are to be filled and/or maintained directly on the press or tool.
The service station consists of the workbench, mobile 2480.00.50.20.1 and a lighting unit, removable 2480.00.50.20.2.

## Advantages:

- “All in One” solution
- High mobility coupled with secure stability
- Clean handling of the gas spring components
- High user comfort

The mobile work bench 2480.00.50.20.1 is equipped with a 40 mm thick Trovidur work surface ①. The surface is hard-wearing and very easy to keep clean.
The height adjustable chassis with 4 castors ② allows for high mobility and provides secure stability for the service station. The chassis is easily moved up and down by way of an excenter lever ③ located on the left of the unit.
At the right of the unit, a loading receptacle with a locking clip ④ is located for 200 bar bottles.
A removable oil sump with a grate in the upper drawer ⑤ will ensure clean handling of the internal gas spring components.
The energy panel ⑥ offers great user comfort because of its integrated operating elements, like the compressed air connection, light switch and 3 x 230 V electric outlet.
The removable lighting unit 2480.00.50.20.2 is height adjustable to cater to the individual requirements of the user.

## Technical data:

2480.00.50.20.1 Work bench, mobile:
Work surface, Tovidur (mm) 1250 x 700 x 40
Work bench chassis made from profile steel tubing (mm) 45 x 45 x 2
Parallel vices, jaw width = 100 mm
2480.00.50.20.2 Lighting unit, removable:
Elongated light (w = 1200 mm) with connection cable and plug
2 x 45 W, strip louvre with reflector
Electronic ballast
Protection type IP20

## Connections

Input:
Central supply line on the right side of the cabinet (bottom rear) with electric supply line (protected energy supply plug)
1/4" internal thread for air infeed
Power bar:
1 x 1/4" internal thread for air
1 x On/OFF switch for air supply, rotary switch for Nitrogen Compact Booster
3 x 230 V socket (with hinged lid)
1 x ON/OFF switch for power supply, rotary switch

## Accessories:

For optimised utilisation of the nitrogen bottle fill amount, a Compact Booster 2480.00.32.71 and a hose line DN4, 3 m 2480.00.32.71.05.03 can be integrated in specifically provided receiving braces in the cabinet ⑦.
The two free drawers ⑧ offer additional space for specialist tool sets 2480.00.50.11 for the repair of gas springs.

# APPLICATION EXAMPLES

## APPLICATION EXAMPLES

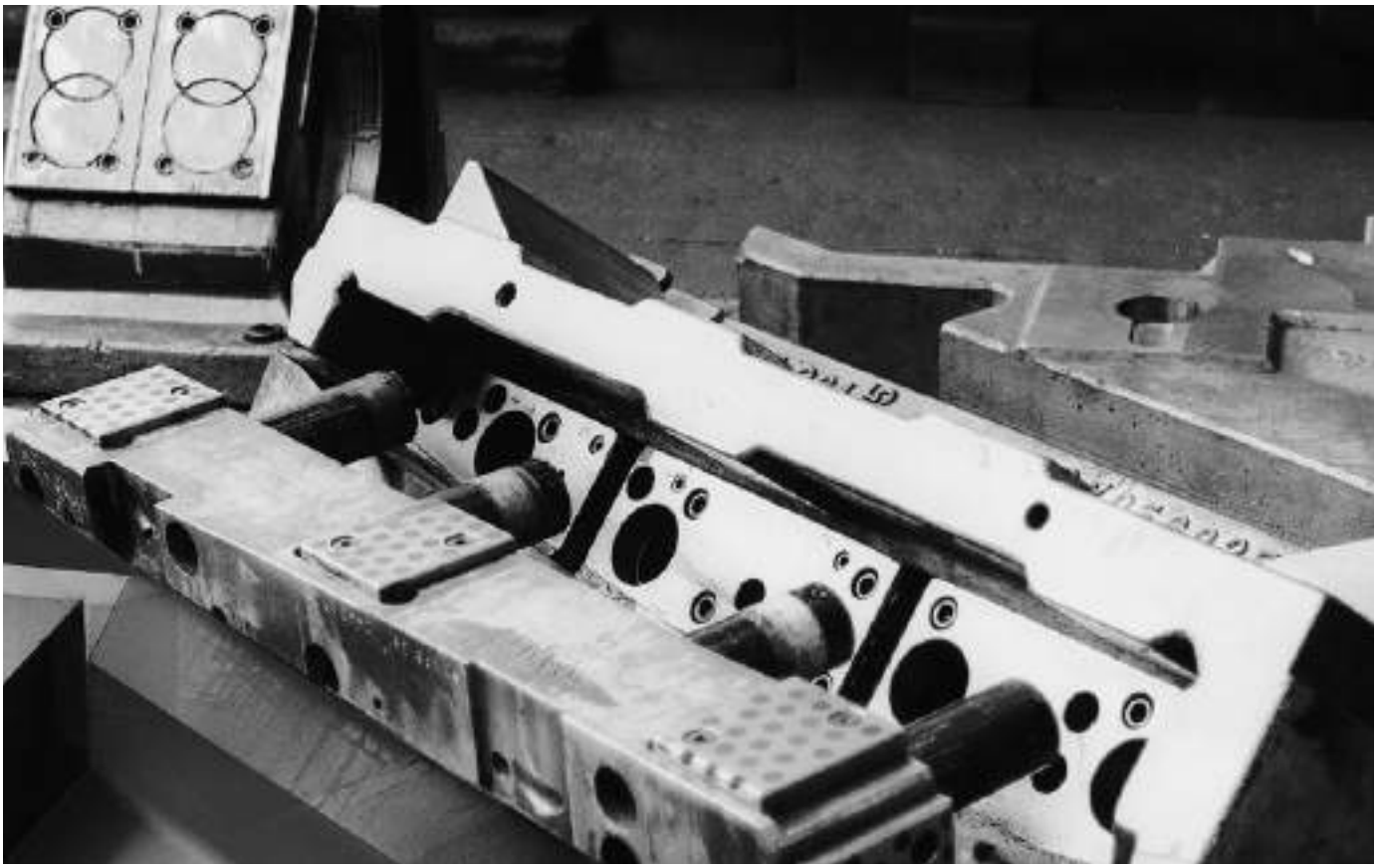

**Trimming tool with inclined, Cam-Operated slide**

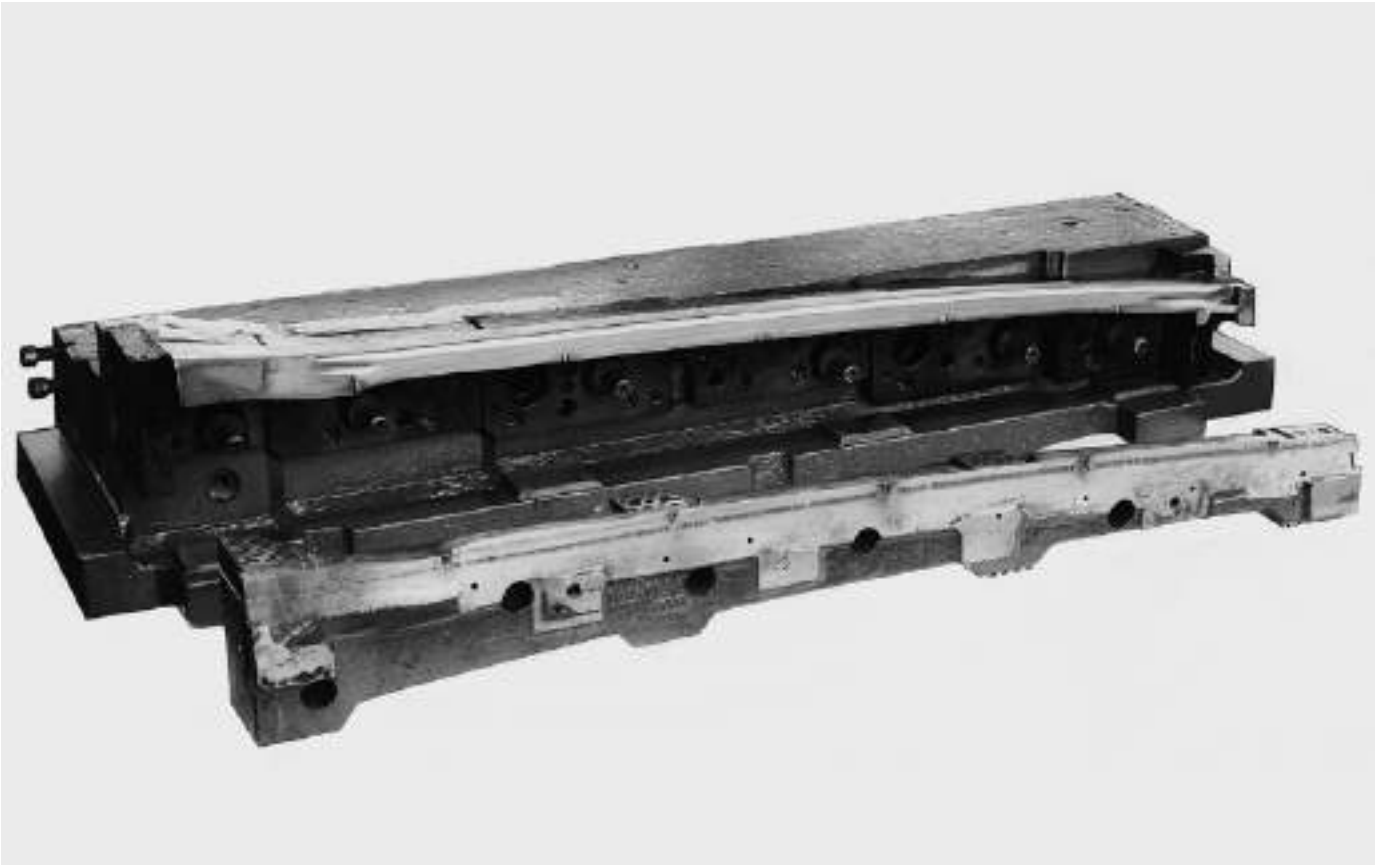

**Drawing slide of large forming tool**

# APPLICATION EXAMPLES

### Trimming tool with inclined, Cam-Operated slide

Nitrogen die cylinders in the top ensure the positive centering of the trimming slide on the centering cones in the bottom tool section.

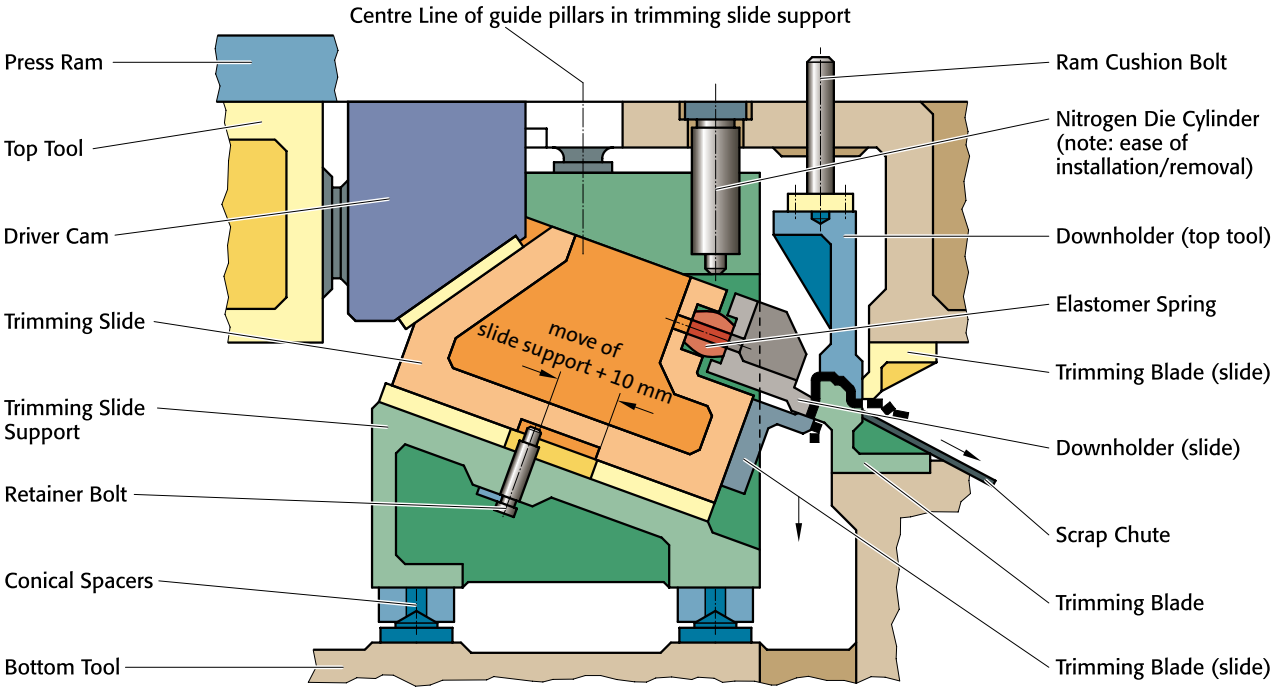


### Drawing tool

The nitrogen die cylinder for the drawing slide is easily placed into position; the safety lid secures it. Very high forces are required in this tool for the draw pad in the slide.

The nitrogen die cylinders in the top tool serve as boosters for the insufficient ram cushion.

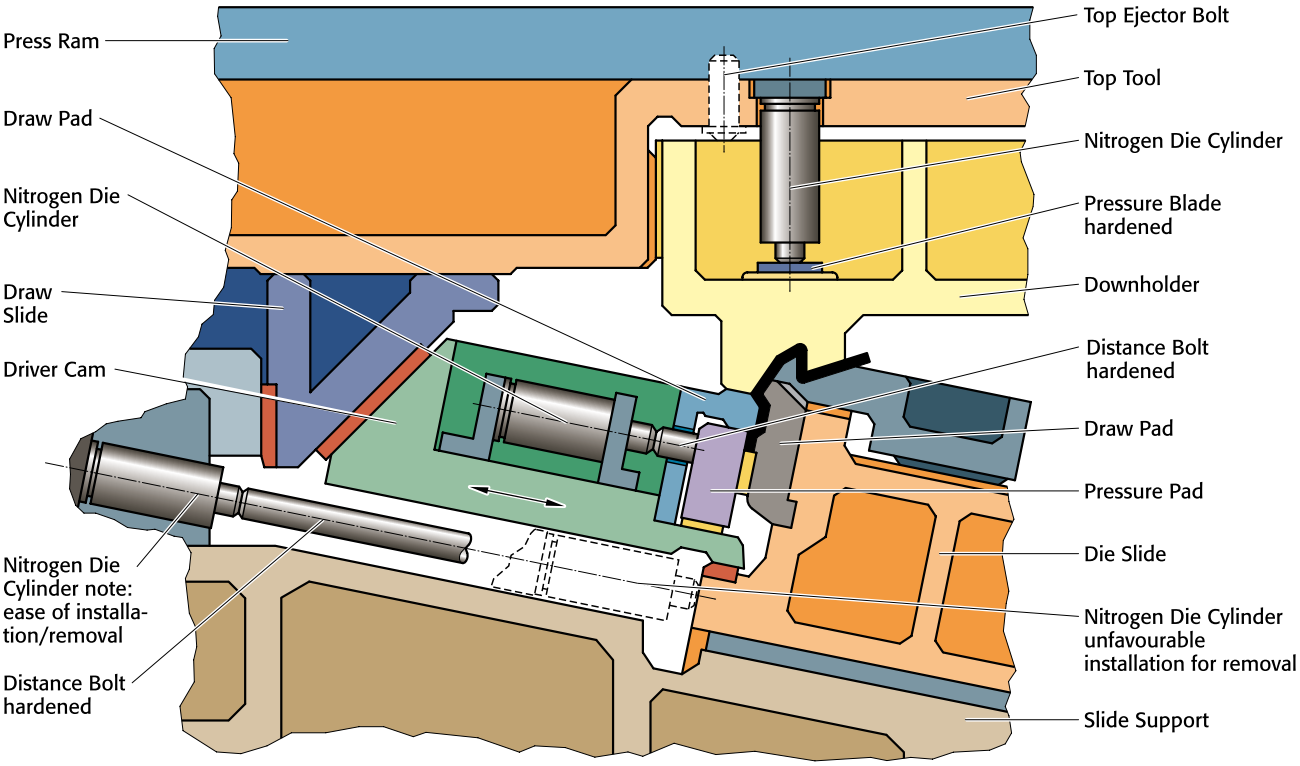

# APPLICATION EXAMPLES

### Flanging tool with nitrogen die cylinders

Where bottom ejection facilities are lacking, FIBRO Nitrogen die cylinders will provide reliable actuation of piece part ejectors.

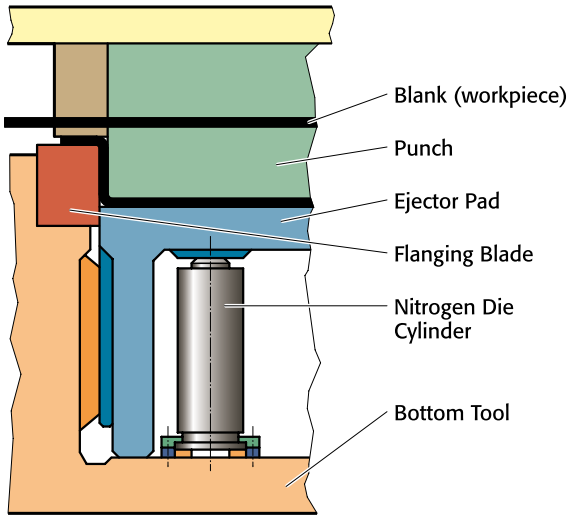


### Flanging tool with ring stripper

The ring stripper is actuated by nitrogen die cylinders.

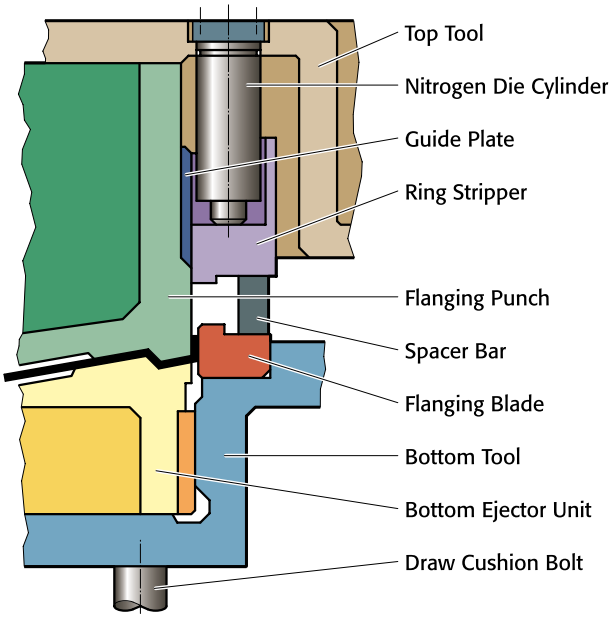


### Double-Acting drawing tool

In order to obtain shorter setting times, only the downholder is boltet to the ram cushion. The drawing punch is raised through f + 20 mm by nitrogen die cylinders.

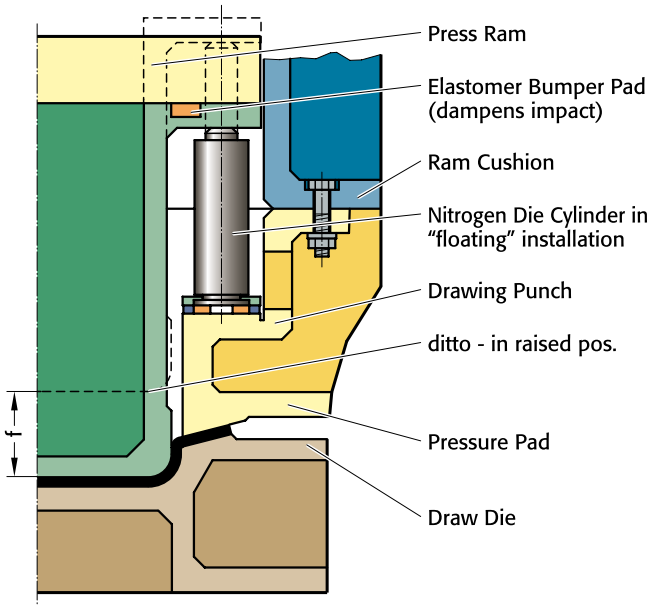


### Blanking and piercing tool

The application of nitrogen die cylinders instead of the usual elastomer bumpers results in a significant reduction of setting time. Moreover, injuries caused by "fly-out" elastomer bumpers are eliminated.

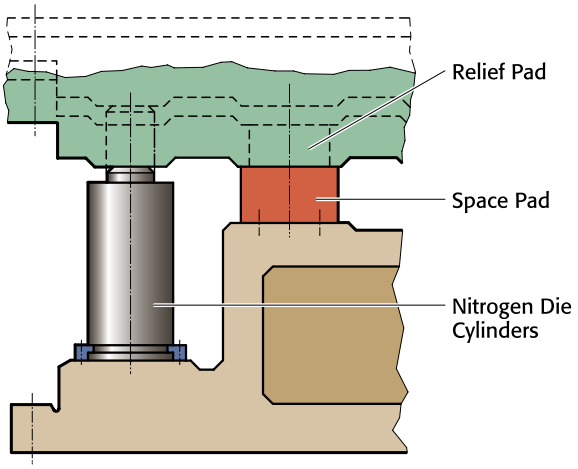

# APPLICATION EXAMPLES

### Retraction of piercing slide by nitrogen die cylinder

Die cylinder is mounted to bottom tool. It retracts the slide after completention of the piercing operation. We recommend a “soft”-start on the cam shape in order to reduce impact and accerleration on the die cylinder.

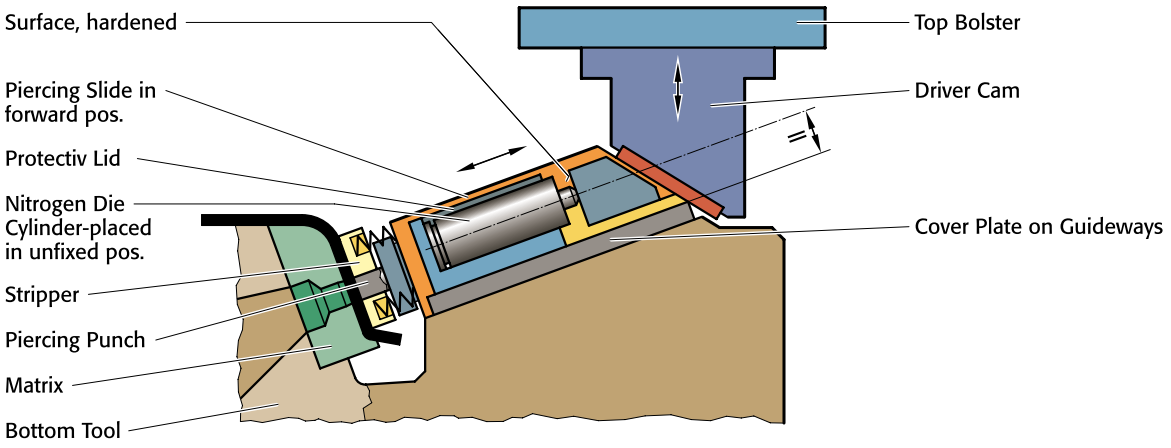


### Drawing tool

In order to prevent wrinkling, this tool requires high forces on the downholder and pressure pad. An elegant solution was achieved with nitrogen die cylinders. Ease of cylinder installation was ensured.

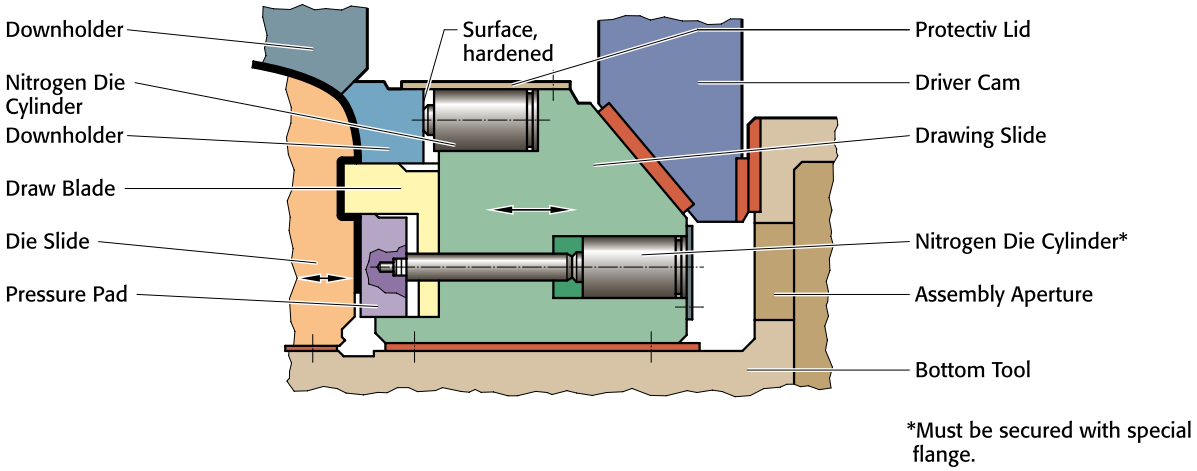


### Drawing tool

The pressure pad is actuated by nitrogen die cylinders during the final 20 mm of the draw.

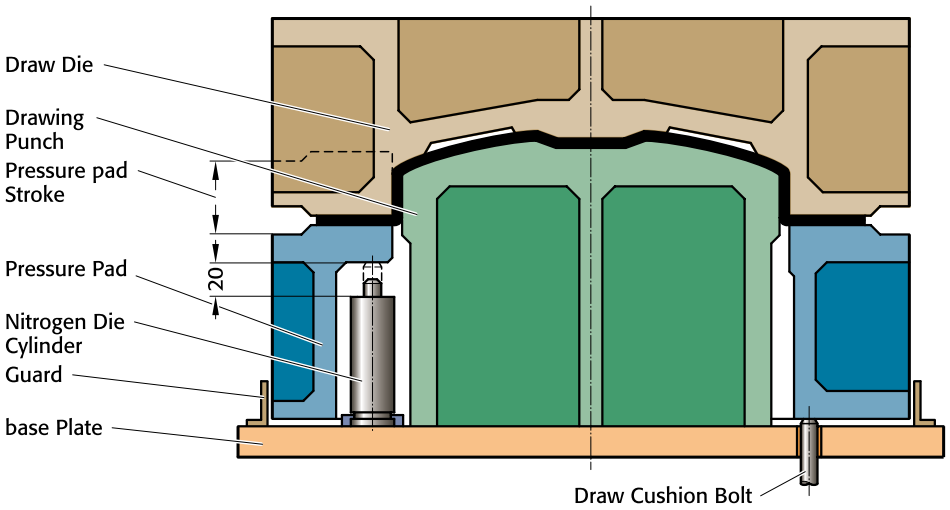

# APPLICATION EXAMPLES

### Detail of progression compound tool

The clamping stripper is actuated by two nitrogen die cylinders 2480.12.01500.025. The units provide an initial cylinder force of 15 kN each and a stroke capacity of 25 mm – of which 20 mm are utilized.

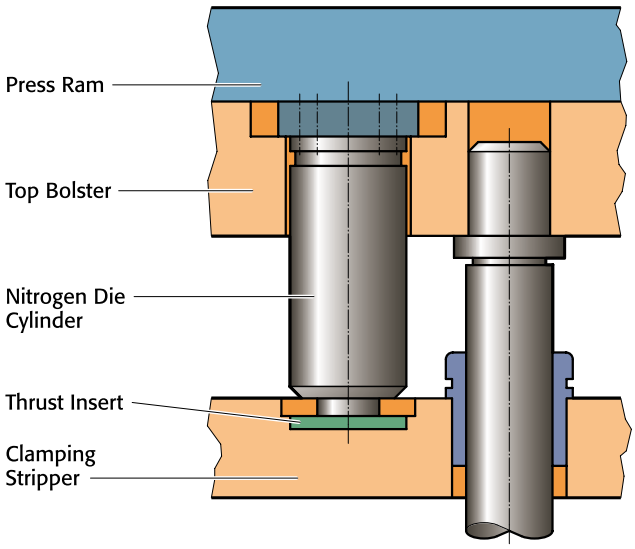


### Drawing tool

Intended for use in a 100 ton hydraulic press, with one nitrogen die cylinder 2480.12.03000.025 mounted in the drawing punch.
In this application the die cylinder serves to accomplish the initial pre-draw of the internal shape, as well as for finish the draw over the draw ring – after the bottoming pressure of 30 kN has been reached.
The nitrogen die cylinder has an initial cylinder force of 30 kN, a stroke capacity of 25 mm – of which 19,5 mm are utilized in operation. Stroking speed is 4 SPM.

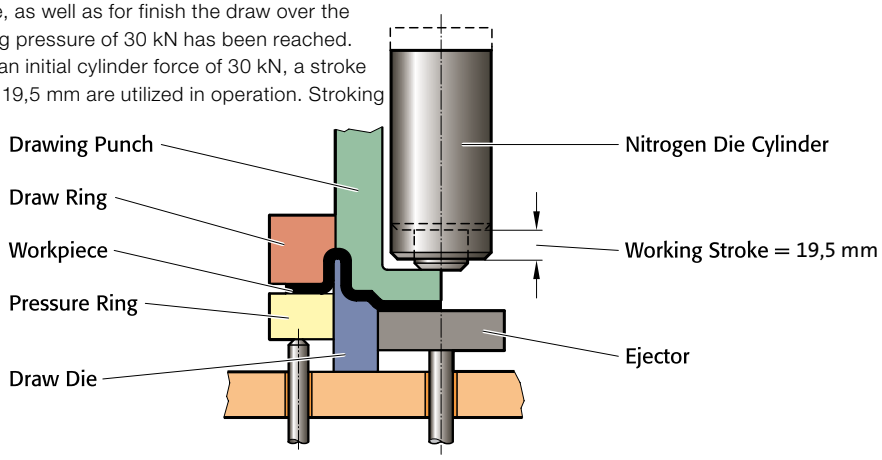


### Bending tool for round bars

This tool employs two nitrogen die cylinders 2480.13.00750.080 for actuating the downholder. Press stroke is 92 mm. The stroke of the downholder is approx. 66 mm.
Because of manual loading, press strokes vary from 36 to 40 SPM. Part ejection is automatic.
The nitrogen die cylinders provide an initial force of 7,5 kN each, and a stroke capacity of 80 mm.

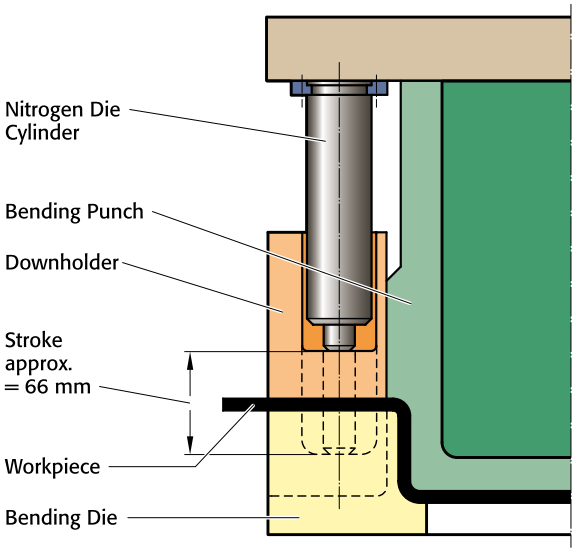

# APPLICATION EXAMPLES

### Bottom ejector in progression compound tool

Two nitrogen die cylinders 2480.13.00750.025 are used, providing an initial force of 7,5 kN each, and a stroke capacity of 25 mm.

The actual working stroke is 10 mm. The tool is run at a speed of 150 SPM, with a ram stroke of 48 mm.

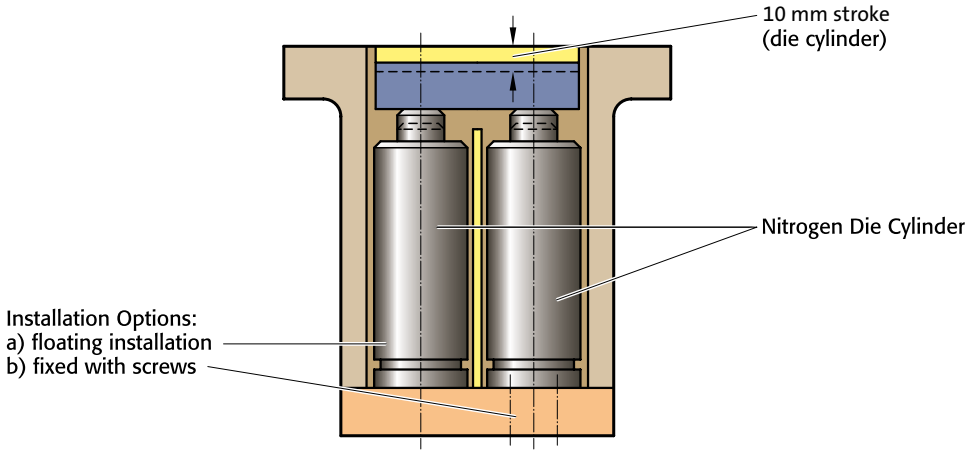


### Drawing- and piercing tool

This tool is used in a 100 ton hydraulic press.
The nitrogen die cylinder is a 2480.13.03000.080, with a charge pressure of 130 bar – giving an initial cylinder force of 26 kN. Stroke capacity is 80 mm. The actual working stroke is 76 mm. The press is run at 14 SPM.

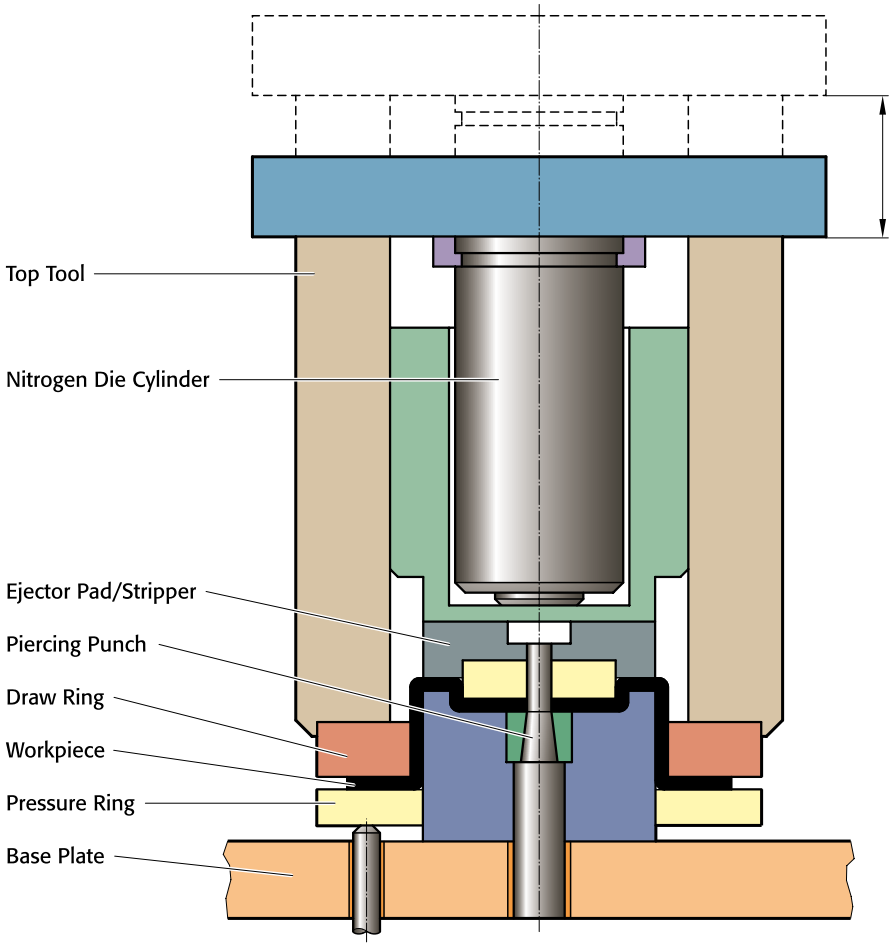

# APPLICATION EXAMPLES

**Gas springs facilitate tools storage and tools preparation for production**

Gas springs find increasing use in large press tools - in the sole role of aiding theier storage and production preparation.
The springs are bolted to either the upper or lower bolsters. They are activated only when the tool is being taken out of the press.
Application examples 1 and 2 show that special spacer caps are inserted prior to the tool being let down onto the gas springs – this being done whilst still in the press. During removal from the press and subsequent storage, the springs will keep the top tool elevated.
Storage stop pins are provided next to the springs; when tools are stacked one on top of the other, the increasing mass will force the springs to recade – and the tops will eventually abut against the storage pins. Once the stack is removed, the springs take over adain and push the top tool up.
With the usage of 4 gas springs, for example upper die parts with a weight up to 20 tons can be held high.
Upon being prepared for production, the springs facilitate access to the tool. Once back in the press, the spacer caps are removed and the storage springs remain inactive during the production run.
It is recommended to affix warning signs to the tools in a prominent position: the presence of gas springs in the tool often cannot be seen from the outside.

**Example 1: Gas Spring fixed to bottom bolster**

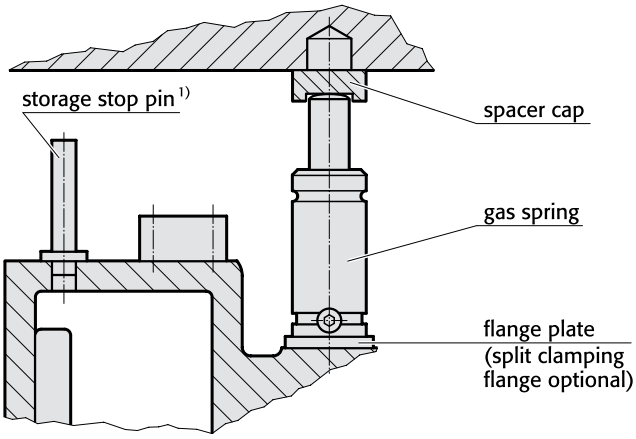


**Example 2: Gas Spring fixed to top tool**

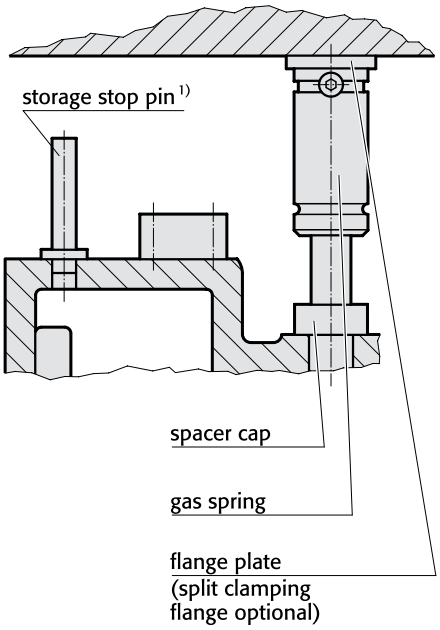


**Example 3: Gas Spring fixed to bottom bolster**

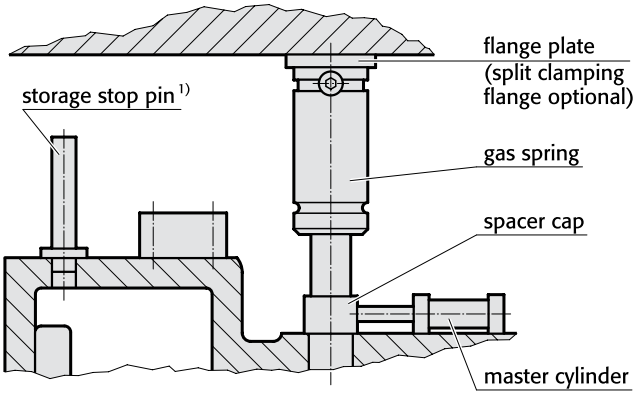


1) storage stop pins are reversible - they are turned round and pushed down into their holes during getting the tool ready for production